Residential Steel Framing:

Training

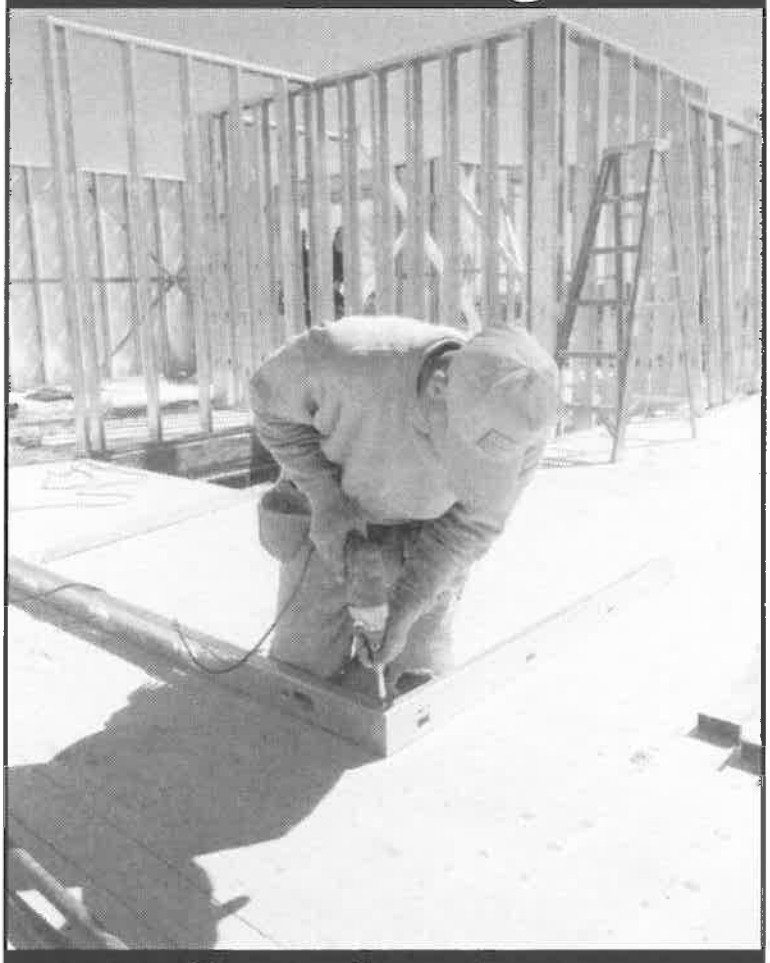

Curriculum

CSSBI 56-2000

CANADIAN
SHEET STEEL
BUILDING INSTITUTE
652 Bishop Street North, Unit 2A
Cambridge, ON N3H 4V6
Tel.: (519) 650-1285 Fax: (519) 650-8081
www.cssbi.ca

ISBN 1-895535-09-3

Preface

This manual is intended as a guide to facilitate the use of lightweight steel framing (LSF) in the construction of single family dwellings or row housing up to three storeys in height that would normally be covered under Part 9 of the National Building Code of Canada. As residential steel framing gains popularity as an alternative to wood framed construction, an increasing number of builders, framers and carpenters across Canada are looking for training. The Residential Steel Framing: Training Curriculum hopes to help fill this void.

This publication provides clear, concise steel framing techniques and procedures that will help existing community colleges, vocational schools and apprenticeship training facilities to better train their students. The curriculum can also be used as a template for other training programs or as a guide to individuals who want to learn more about steel framing. Individual chapters selected from the curriculum can also be tailored for Students' needs in one or two week seminars, as well as full semester programs, or as modules added to training programs of other residential construction trades. The emphasis of the publication is on the transmission of learning skills, not the type of educational program.

It is important to realize that while cold formed steel has been used for many years in commercial construction, the widespread building with this material in residential construction is relatively new. Rapid growth is fostering innovation, improved techniques, advancement in tools, and improved and simplified details. As growth and advancement continues, this curriculum will need to be updated. A mail-in registration card is included for the purpose of notifying curriculum users about these updates.

For additional information on residential steel framing, contact the following organizations:

Canadian Sheet Steel Building Institute
Tel: (519) 650-1285
Web site: **www.cssbi.ca**

North American Steel Framing Alliance
Tel: (519) 686-1269
Web site: **www.steelframingalliance.com**

Acknowledgments

This document has been developed by the Canadian Sheet Steel Building Institute (CSSBI) in partnership with several organizations. CSSBI gratefully acknowledges the assistance provided by **Mohawk College of Applied Arts and Technology**, the **North American Steel Framing Alliance**, and the **Carpenters District Council of Ontario**.

Adaptation and pilot testing of this curriculum would not have been possible without the generous funding from the following organizations:

American Iron and Steel Institute
Human Resources Development Canada
Ontario Ministry of Economic Development and Trade

Many thanks must also be given to the following people who devoted time to be a part of the steering committee, which oversaw the curriculum development:

Vic Bodnar	**Carpenters District Council of Ontario**
Kamran Derayeh	**Dofasco Inc.**
Richard Johnson	**Human Resources Development Canada**
Denise Boisvert	**Ministry of Training Colleges and Universities, Apprenticeship Branch**
Josie Kovacic	**Ministry of Training Colleges and Universities, Apprenticeship Branch**
Chris Blackwood	**Mohawk College of Applied Arts and Technology, Chair, Building and Construction Sciences**
Sharon Estok	**Mohawk College of Applied Arts and Technology, Training Consultant**
Ralph Vyn	**Mohawk College of Applied Arts and Technology, Carpentry Co-ordinator**
Bill Kraft	**North American Steel Framing Alliance**
Mike Jurgenliemk	**Roll Formed Specialty**
Gord Millar	**Stelco Inc.**

The contribution made by the following individuals to curriculum writing, editing, photography, design, graphics and pilot testing was invaluable:

Paul Copeland	**Bailey Metal Products**
Peter Topp	**Bailey Metal Products**
Steve Fox	**Canadian Sheet Steel Building Institute**
Vic Lewis	**CSM Canadian Steel Manufacturing**
J. Cran	**Cran Associates Ltd.**
Joe Vella	**Fifthshire Homes**
Dave Fogolin	**KML Engineered Homes**
Tom Gyorkos	**KML Engineered Homes**
Billy Bishop	**Lake Ontario District Council, United Brotherhood of Carpenters and Joiners of America**
Sue Ardell	**Mohawk College of Applied Arts and Technology**
Chris Boucher	**Mohawk College of Applied Arts and Technology**
Sean Boyd	**Mohawk College of Applied Arts and Technology**
Warren Hyde	**Mohawk College of Applied Arts and Technology**
Mike Bryan	**Monarch Construction Ltd.**
John Camuso	**Omega Manufacturing**
Mike Wilford	**Student Apprentice**

1. INTRODUCTION

Chapter Objective

The purpose of this chapter is to introduce students to the relatively new technique of residential framing with cold formed lightweight steel. Steel has been used to frame large commercial and institutional structures for many years. Its use as a framing material to build houses does not have such a long history.

In this introductory chapter the student will become familiar with the benefits of using steel for residential framing. They will also be taken through a review of general carpentry and framing terminology and introduced to some of the terminology that is specific to steel framing.

Specific Learning Objectives

After completing this chapter, the student will be able to:

Objective 1.1: Describe some of the benefits of using steel for residential framing.
Objective 1.2: State what is meant by the term "cold formed steel".
Objective 1.3: Demonstrate a familiarity with the terminology associated with residential steel framing by matching terminology with the appropriate definition, and using the correct descriptive terms in a hands-on setting.
Objective 1.4: Understand the intent of this training manual and other residential steel framing reference documents and codes.

Suggested Activities

This curriculum was developed to use classroom lecture and practical hands-on teaching. The instructor will ultimately determine the best methods and techniques for optimum learning. Intensive hands-on training is encouraged. This course provides as many practical situations and examples as possible to facilitate learning.

FIGURE 1.1 STEEL FRAMING CLASS

The material in this chapter is best delivered through classroom instruction and, if possible, a visit to a residential steel framing project. Guest lecturers from the Canadian Sheet Steel Building Institute and other steel manufacturers can be arranged, but guest lecturers must always be given learning objectives to cover and guidelines for their presentation. If a guest lecturer is available, you may want to take this opportunity to cover some of the objectives in other chapters in this manual (i.e. *Chapter 3 Design and Material Standards*, *Chapter 5 Manufacturing Steel*).

If a site visit cannot be arranged, slides of the steel frame of a home may be used. The instructor should take the opportunity at the beginning of the course to discover the framing experiences of the students. If any student has steel framing experience, this could add significantly to any discussion surrounding the advantages, disadvantages, and special construction considerations that steel framing requires.

Materials and Equipment

Material required for this chapter is summarized in the table below.

Item	Quantity
Transportation to residential steel framing project	1
Slides of residential steel framing project	1
Safety hardhats, boots (student provides own)	
Steel Studs & Joists, Tracks, Fasteners, and Accessories (for demonstration purposes)	
Residential Steel Framing Training Manual	(one per student)
CSSBI Steel Framing for Part 9 Construction (reference)	1
CCMC Technical Guide for Lightweight Steel Framing (reference)	1
NBCC Part 4 & Part 9 (reference)	1
CSSBI Installation Manual & Member Selection Tables	(one per student)

1. INTRODUCTION

1.1 Welcome!

Welcome to the world of residential cold formed steel framing! While steel has been used to frame large commercial and institutional structures for many years, its use as a framing material to build houses is relatively new.

Today's carpenters have relied on apprenticeship training, on the job experience, and the knowledge of experienced co-workers and relatives to pass on the residential wood framing trade. Steel framing does not have the benefit of being a well-established and widely known method for framing residential structures. Only a handful of experts are available to assist in the art and science of residential steel framing. This manual is designed to address this lack of expertise by providing training and assistance for one of the fastest growing construction industries in North America.

This manual is to be used as a training tool for the novice steel framer in conjunction with the other publications referred to in this document. It is not a "Building Code" in and of itself, but it does provide standards and guidelines for residential steel framing that will meet the structural needs of a home and satisfy the requirements of most local building authorities.

FIGURE 1.2 STEEL FRAMED HOUSE

This introductory chapter is divided into the following sections:

Section 1.2: Why Use Steel?
Section 1.3: Manual Overview
Section 1.4: Other Publications and Codes
Section 1.5: Terminology

The purpose of this chapter is to introduce students to the relatively new technique of residential framing with cold formed lightweight steel.

1.2 Why Use Steel?

Steel is one of the most durable and versatile of building materials. Contractors who use steel for framing structures enjoy straighter walls, fewer call back problems, and the satisfaction that the material they frame with is durable and long lasting. Steel will not decay inside the wall cavity, nor is it subject to mold or vermin damage by insects and rodents.

Unlike wood framing materials, moisture content is not a consideration with newly purchased steel. Steel will not absorb moisture after placement in the floors, walls and roof. Steel studs, joists and other framing members are factory-coated with pure zinc (galvanized) or zinc-aluminum alloy (Galvalume ™) to resist rust and corrosion.

Steel is 100% recyclable without any degradation in material properties. Framing materials made from steel contain at least 25% recycled material. Any framing material left over after framing is easily recycled or used at the next job.

Steel framing members have a high strength to weight ratio. Individual members are lighter per unit length than traditional wood framing members. Due to the low self-weight per unit length and the strength of steel, steel joists of the same dimension as wood joists can span longer distances. By increasing the base thickness of the steel in a floor joist, the strength and span can be increased. Similiarly, steel wall studs can vary in base steel thickness depending on whether they are load bearing or non-load bearing.

Steel is non-combustible and does not contribute fuel to a fire, unlike other framing materials. Some insurance companies in both the United States and Alberta recognize the non-combustible aspects of steel by offering home insurance rates that are lower for steel framed homes. Steel is inert and does not emit fumes, gases, vapours or support the growth of molds and fungi.

Historically, steel prices have remained relatively stable while lumber prices have varied widely. Some contractors find steel price stability to be attractive when making a material choice. Labor costs for steel framers are comparable, although residential framers new to steel will not be as cost-effective as experienced steel framers. Therefore, it is advantageous for steel framers to undergo as much training as possible to effectively compete with wood framers.

The steel that is predominantly used for residential lightweight steel framing (LSF) is referred to as cold formed steel (CFS). CFS is made from sheet steel that undergoes a forming process at room temperature. This forming is known as "cold forming" (see *Chapter 5 Manufacturing Steel*).

1.3 Manual Overview

This manual is divided into 20 chapters. Each chapter discusses a different aspect of residential steel framing.

Chapter 1	**Introduction**
Chapter 2	**Job Health and Safety**
Chapter 3	**Design & Material Standards**
Chapter 4	**Design Process**
Chapter 5	**Manufacturing Steel**
Chapter 6	**The Cut-List, Ordering, and Delivery of Steel**
Chapter 7	**Tools**
Chapter 8	**Fasteners**
Chapter 9	**Foundations**
Chapter 10	**Floor Joists**
Chapter 11	**Load-Bearing Walls**
Chapter 12	**Roof Rafter Framing**
Chapter 13	**Roof Trusses**
Chapter 14	**Hip Roofs**
Chapter 15	**Specialty Framing**
Chapter 16	**Non-Load Bearing Walls**
Chapter 17	**Thermal, Vapour and Air Barriers**
Chapter 18	**Exterior Finishes**
Chapter 19	**Utilities – The Other Trades**
Chapter 20	**Conclusion**

Chapters 1 through 8 provide background information about steel framing. These chapters discuss specific safety issues surrounding steel, describe the steel framing materials and how they are manufactured and identified, and explain the tools and fasteners required.

Chapters 9 through 16 deal with the actual framing process. From the foundation to the roof, these chapters provide the student with information about the layout and assembly of floor, wall, and roof systems made from steel.

Chapters 17 through 20 discuss the other residential construction tasks associated with vapour and air barriers, insulation, building services (i.e. HVAC, plumbing, electrical), and interior and exterior finishes.

Many of the chapters provide instructional "how to" directions for hands-on training. Hands-on training is essential to learn the proper steel framing techniques. It is highly recommended that students receive hands-on training before attempting to frame steel houses on their own.

Each chapter is divided into sections and sub-sections to help organize and cover as many topics as thoroughly as possible. Figures are included in each chapter to help clarify or support important points or difficult ideas.

1.4 Other Publications and Codes

This manual is based on the American Iron and Steel Institute's (AISI) *Residential Steel Framing National Training Curriculum.* It has been adapted to suit Canadian needs expressed by the *National Building Code of Canada (NBCC)* and provincial building codes. Some steel framing requirements will vary province to province. The user is encouraged to compare steel framing techniques presented in this manual with the requirements, if any, expressed by their local building authority.

Several other publications that offer assistance, guidance, and standard practices will be mentioned throughout this manual. Naturally the *NBCC*, provincial building codes, and the local building code officials will have final authority.

1.5 Terminology

The following steel framing terms are used throughout this manual and it is important that the student become familiar with them. Additional definitions may be found in the Canadian Sheet Steel Building Institute publication *Installation Manual* (CSSBI 55-99 August 1999).

Axial Load:	Longitudinal force acting on a member. Examples are gravity loads carried by columns or studs.
Base Steel:	Steel substrate in a sheet steel product that has been coated with a metallic layer such as zinc. The base steel thickness is used in the structural design of lightweight steel framing members.
Blocking:	A form of bridging, usually a solid piece of joist or stud material fastened in place between the framing members.
Bracing:	Methods used to resist twisting of the framing members (joists or studs) and to control racking (diagonal movement) of the frame in its plane.
Bridging:	A method used to resist twisting of the framing members, for example: blocking, flat strap or notched channel.
Buckling:	Kink, wrinkle, bulge or other distortion in the original shape of a steel framing member caused by compressive loading.
Building Codes:	Minimum standards that federal, provincial and municipal or regional jurisdictions adopt for building construction to assure human safety and well being.
CCMC	Canadian Construction Materials Centre – the organization that provides a registry of construction materials accepted by the regional or municipal building authorities. A CCMC certification number on a steel framing member indicates that it meets certain specifications for residential steel framing.
CSSBI	Canadian Sheet Steel Building Institute - the main advocate for residential steel framing in Canada. CSSBI's *Steel Framing for Part 9 Construction* provides a prescriptive method for residential steel framing.
C-Section:	See **C-Shape**
C-Shape:	Cross-sectional shape of cold formed steel member used for studs, joists, headers, rafters, etc. These members have a "lipped" or stiffened flange to provide extra stability
Ceiling Joist:	Horizontal structural framing member that supports ceiling and attic loads.

Clip Angle:	L-shaped short piece of metal (normally with a 90° bend) used for connecting webs of framing material to studs, joists, and rafters.
Cold Forming:	Process where sheet steel is bent into framing members by either press-braking or continuous roll forming at room temperature.
Colour Code:	Standard method of identifying the base steel thickness. The colour is factory-applied to one end of the framing member.
Cripple Stud:	A short stud that is placed between a lintel and a top sill, a bottom sill and a bottom track, or a top track and lintel at an opening, and which provides backing for wallboard or sheathing material. A load bearing cripple stud normally has the same base steel thickness as a load bearing wall stud.
Dead Load:	Load created by the weight of floors, walls, partitions, ceilings, roofs and other permanent elements of the structure.
Design Professional:	Architect or engineer registered and licensed to practice by a provincial authority. Currently, steel roof structures (rafters or trusses) are beyond the scope of the CSSBI *Steel Framing for Part 9 Construction* and a professional is needed to design this part of the structure. The designer should be familiar with the design of LSF structural members.
Detail:	Small drawing on the plans that illustrates how a connection is made or how framing members are assembled.
DWV:	Drains, Waste, Vent - the complete plumbing system containing all waste water drainage and venting
Earthquake:	Seismic event that introduces horizontal (seismic) loading on a structure. Earthquakes can cause significant and sometimes permanent shifting or "racking" of the walls. The severity of earthquake loading has been predetermined for various areas of Canada and is accounted for in NBCC. CSSBI *Steel Framing for Part 9 Construction* provides exterior wall bracing requirements for a majority of seismic conditions with the exception of certain areas in BC and Quebec. It is advisable to retain a design professional for these areas of high seismic activity.
Flange:	Part of a C-section or U-section that is perpendicular to the web.
Flat Strap:	Sheet steel cut to a specified width without any bends. Flat straps are typically used for wall and floor bracing and transfer loads by tension.

Floor Joist:	Horizontal structural framing member that supports floor loads.
Galvanized Steel:	A steel product with a metallic coating, in this case pure zinc, for the purpose of resisting corrosion. A variation is Galvalume, a metallic coating of zinc and aluminum for the same purpose. The level of protection is determined by the coating weight. Metallic coatings for load bearing residential steel framing members have minimum coating weight requirements.
Header:	Framing member in a floor opening that is perpendicular to the floor joists that frame into it. A header is usually the same depth as other joists in the floor, and can be a single joist or a built-up member of joist and track sections depending on the size of the floor opening.
In-Line Framing:	Framing method where all vertical and horizontal load carrying members are aligned.
Jack Stud:	Structural wall member forming part of the built-up assembly for a window opening or door and providing bearing support for the lintel. It is used with a king stud and it normally matches the wall stud size and base steel thickness.
Jamb Studs:	King-jack stud assembly that frames the sides of a wall opening.
Joist:	See **Floor Joist**, **Ceiling Joist**
King Stud:	Structural wall member forming part of the built-up assembly at an opening such as a window or door. The king stud extends full height of the wall between top and bottom tracks, is attached to the jack stud, and normally matches the wall stud size and base steel thickness.
Lintel:	Horizontal framing member (normally built-up) spanning a window or door opening and supporting the structure above by transmitting the load across the opening to adjacent wall framing members (the king-jack stud assembly).
Lip:	Part of a C-section that extends from the flange at the open end. The lip increases the strength of the member and acts as a stiffener to the flange.
Live Load:	Load created by transient or sustained forces such as occupancy of the structure and the natural forces of wind, snow, rain and seismic activity.
LSF:	Lightweight (or light gauge) Steel Framing – an assembly of lightweight steel members and accessories to form the structural and non-structural frame of a building.

Load Bearing Wall: Wall that withstands vertical and transverse forces resulting from live and dead loading on and within the structure. Exterior walls are generally load bearing.

Material Thickness: The thickness of the base metal exclusive of the protective coating expressed in 1/1000 of an inch (mils) or millimeters (mm). This thickness is used for computing load capacity in design. However for practical purposes in the field, the total thickness of base metal and coating is considered to be the material thickness. The thickness is normally part of the member identification.

Member Identification: Steel framing members are identified with respect to size and manufacturer name or **CCMC** certification number. The identification is applied at regular intervals along the length of the member.

Member Size: Steel framing members have web depth, flange width, and material thickness all defining the member size.

Mil: Unit of measurement typically used in measuring the thickness of thin steel elements.
1 mil = 1/1000 in.

Multiple Span: The span made by a continuous horizontal member having intermediate supports (see also **Span**).

Mushroom Spikes: Expansion anchors that are set by drilling a hole into concrete and tapping the anchor in place. Manufactured by companies like RAWL.

NBCC: National Building Code of Canada - the national building code for the country on which the provincial building codes are modeled. Part 9 of the *NBCC* largely governs residential design and construction but so far precludes steel framing. The CCMC registry of steel framing is an equivalent to *Part 9 NBCC* accepted by local building authorities.

Non-Load Bearing Walls: Wall that must withstand itself or dead weight only. Interior walls are often non-load bearing (see also **Walls**)

OBC: Ontario Building Code - the codes and regulations for the building industry required by provincial legislation in Ontario

Performance Method: Design method that uses engineering principles, material characteristics, and calculations to determine framing member thickness and size in a structure. Currently, the supporting roof structure in a residential building must be designed using the performance method by a design professional to meet the requirements of *Part 4 NBCC*.

Prescriptive Method:	Design method that uses pre-calculated, tabular values to determine size and thickness of member in the structure. Whereas *Part 9 NBCC* is a prescriptive method for wood construction, *CSSBI Steel Framing for Part 9 Construction* contains the prescriptive method for steel framing of floors and walls. Both the *NBCC* and *CSSBI* prescriptive methods are limited with respect to building size.
Press-braking:	Process used to cold form steel shapes using brake press machinery.
Punchout:	Hole in the web of a steel framing member for the installation of plumbing, electrical, and other utility installation.
Racking:	Movement of part of a wall, floor or roof assembly from its original "square" alignment. Bracing in the form of flat straps or sheathing prevents racking.
Rafter:	Structural framing member that supports roof loads.
Rim joist:	U-section (track) that is placed on edge, perpendicular to the ends of the floor joists.
Roll Forming:	Process of making cold formed steel framing material by passing sheet steel through a series of roller dies.
Shearwall:	Vertical wall assembly capable of resisting lateral forces to prevent racking from wind or seismic loads acting parallel to the plane of the wall.
Span:	Distance between the centres of support of a structural member. The centre of a support is the midpoint of the support width. A **single span** is a member without intermediate support. A **continuous span** has two or more supports. A **clear span** is the distance between edges of support and therefore is less than the **span**.
Structural Sheathing:	Covering used directly over structural members to distribute loads, brace walls and floors, and strengthen the assembly.
Stud:	Vertical structural element of a wall assembly that supports vertical loads and/or transfers lateral loads.
Track:	See **U-section**
U-Section:	Cross-sectional shape of cold formed steel member but <u>without</u> stiffening lips on the flanges. Used for top and bottom plates in a wall assembly, as a rim joist in the floor assembly at the foundation wall and with a header assembly in a floor opening. Track web depth is the inside measurement between the flanges.
Walls:	Vertical assembly between floors or between floor and roof in a framed system.

Web: Part of a C-section or U-section that connects the two flanges.

Web Crippling: The localized permanent deformation of the web member subjected to concentrated load or reaction at bearing supports.

Web Stiffener: Additional material that is attached to the web to strengthen the member against web crippling. Also called bearing stiffener.

Wind Load: Horizontal loading created by air movement past a structure that must be resisted to limit racking. The amount of wind loading depends on exposure (largely a function of building height), wind speed, and geographic location, and is expressed as a pressure. *CSSBI Steel Framing for Part 9 Construction* contains bracing requirements for exterior walls for a 1 in 30-year wind load.

Yield Strength: Highest unit stress in pounds per square inch (psi) or megapascals (MPa) that a material can endure before permanent deformation occurs as measured by testing. Yield strength for steel framing material is indicated by the "Grade" in the material specification.

2. JOB HEALTH AND SAFETY

Chapter Objective

The purpose of this chapter is to develop the ability of the student to recognize construction site hazards, to make appropriate decisions regarding protective equipment and procedures, and understand specific safety requirements associated with steel frame construction. They should be able to identify and demonstrate the safety precautions required when working with steel. They should understand and be able to reference the applicable Ontario *Occupational Health and Safety Act (OHSA) and Regulations* for general job site safety. For jurisdictions outside Ontario, the instructor and student are referred to the appropriate provincial acts and regulations.

Specific Learning Objectives

After completing this chapter, the student will be able to:

Objective 2.1: Recognize potentially hazardous situations on a construction site and recommend mitigating actions to minimize the hazard;

Objective 2.2: Identify and demonstrate the safety precautions required for steel frame construction including the use of hand and power tools, material handling and storage, and working at heights;

Objective 2.3: Identify the common forms of personal protective equipment needed for steel frame construction and demonstrate the appropriate use of that equipment;

Objective 2.4: Demonstrate a familiarity with the Ontario *Occupational Health and Safety Act (OHSA) and Regulations*, and be able to reference the Act and Regulations as required.

Suggested Activities

Safe construction site practices such as those designated in the *Construction Health and Safety Manual* published by the Construction Safety Association of Ontario, and specific practices from the OHSA should be first discussed in the classroom and then demonstrated on a real or simulated construction site. Specific items that can be addressed include, but are not necessarily limited to, the following:

- detailed description, demonstration, and practice of proper lifting and carrying techniques;
- detailed description, demonstration, and practice of proper techniques for storing steel framing materials on the ground and at heights;
- detailed description, demonstration, and practice of proper methods for tool use and maintenance;
- investigation into electrical hazards, weather conditions, and personal protective equipment use;
- detailed discussions around job site safety considerations such as housekeeping, openings, guard rails, methods of access and egress, slips and falls;
- specific steel frame construction safety considerations such as sharp edges, cold and hot steel awareness, noise, metal filings, fasteners, wet steel, and personal protective equipment use;
- an examination and demonstration of the problems associated with working at heights. This includes working from ladders, platforms, scaffolding, and the use of fall arrest systems.

Students must demonstrate an understanding and awareness of construction safety throughout the course with special emphasis on steel frame construction. The instructor should take every opportunity to point out potential hazards and challenge the students to develop solutions to those hazards.

Materials and Equipment

Material required for this chapter is summarized in the table below.

Item	Quantity
OHSA (handbook version)	12
CSA Construction Health and Safety Manual (reference)	1
Ear protection, Gloves, Eyewear	12 each
Ladder	2
Scaffolding	2
Personal Fall Arrest System	12
Safety Hardhats, Boots, Tool Belt (student provides own)	-
Power Tools (chop saw, circular saw, variable speed reversible screwguns and tips, extension cords, GFCI)	-
Hand Tools (vice grip clamps, C clamps, metal snips, 4ft magnetic levels, framing squares, string and chalk lines, plumb bobs, measuring tapes)	-
Steel Studs, Tracks, Fasteners, and Accessories (for demonstrations of cutting, screwing, bending, etc.)	-

2. JOB HEALTH AND SAFETY

2.1 Introduction

Safety awareness and the use of safe construction practices are an important part of everyone's day to day activities on the construction site. Unsafe practices and working conditions may contribute to accidents, lead to pain and suffering, and result in loss of production and quality.

Simple safety practices can eliminate most injuries. Throughout this course safety considerations for both general construction site situations and those specific to steel frame construction will be examined. A discussion of job and personal health and safety issues will be divided into the following sections:

Section 2.2: Personal Protective Equipment
Section 2.3: Material Handling and Storage
Section 2.4: Power Tool Safety
Section 2.5: General Job Site Safety
Section 2.6: Working At Heights

The purpose of this chapter is to develop the ability of the student to recognize construction site hazards, to make appropriate decisions regarding protective equipment and procedures, and understand specific safety requirements associated with lightweight steel frame (LSF) construction. The student should be able to identify and demonstrate the safety precautions required when working with steel framing materials. They should understand and be able to reference the applicable Ontario *Occupational Health and Safety Act (OHSA) and Regulations* for general job site safety. For jurisdictions outside Ontario, the instructor and student are referred to the appropriate provincial acts and regulations.

Numerous references to the Ontario OHSA and its associated regulations will be made in this and other chapters. For example, reference to the OHSA Regulation 182 will be shortened to *OHSA Reg 182*.

2.2 Personal Protective Equipment

All workers on a construction site must take responsibility for their personal protection and the protection of their fellow workers. In addition to **safety boots** and **hard hats**, there will be times when safety **eye wear**, **hearing protection**, and proper **hand protection** is required. Safety glasses, hearing protection, and gloves will be mentioned in subsequent sections.

Some general safety requirements for personal protection on a job site include the following:

- avoid loose clothing or baggy cuffs on pants, shirts, and jackets;
- keep clothing, gloves, and boots clean of grease, solvents, and oils;
- immediately discard/repair torn or ragged clothing;
- do not wear finger rings as they are likely to catch on edges and equipment;
- keep safety boots properly tied and free of mud;
- adjust hard hat internal harness to fit snug on head;

If at any time you're not sure about a task or situation, ask for advice from a fellow worker or supervisor.

2.3 Material Handling and Storage

This section examines the proper methods of lifting, carrying, storing, and working with the materials used in steel frame construction, and the personal protective equipment used to protect the worker.

2.3.1 Material Storage

Steel framing involves the lifting, moving, and handling of a great deal of material. Every job site should be planned to allow **easy access to materials** and require only a minimum amount of material handling. This saves time and money, and also reduces the risk of worker injury. **Proper storage of materials** to prevent collapse or toppling must be addressed in conjunction with *OHSA Reg 37-40.*

2.3.2 Lifting and Carrying Techniques

While a steel stud alone is relatively lightweight (lighter than a wooden stud of the same dimensions) some of the materials associated with steel framing are quite heavy. Workers should always use the proper **lifting and carrying techniques** as detailed in Figure 2. 1. The risk of back injury increases with the amount and the weight of materials moved. Therefore it is best to use mechanical or motorized means to move large quantities of material whenever possible.

The **proper method of carrying materials** to avoid hitting other workers involves carrying materials with the front end slightly raised. Whenever possible material should be "arm carried" rather than carried on the shoulder. Transporting materials with a "shoulder carry" reduces the carrier's visibility and maneuverability.

Lifting Sheet Materials

When you handle large sheet materials, it is essential to use the proper techniques to protect your back. Where possible, store sheets at a convenient height and above ground on dunnage or tresties.

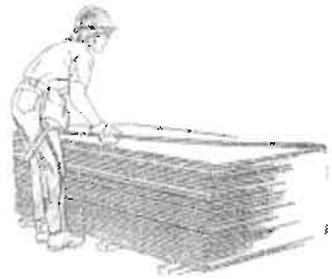

Grasp sheet on long side at mid-point.

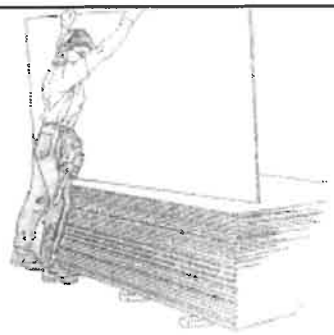

Tip sheet up, then slide sheet partway off pile.

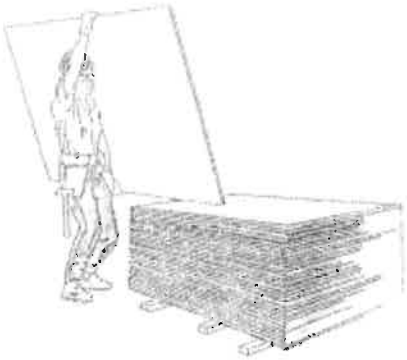

Bend at knees, maintaining the normal curve in your lower back. Grasp sheet above and below at mid-point.

Carry sheet, keeping back erect. Avoid leaning to one side.

FIGURE 2.1 LIFTING AND CARRYING TECHNIQUES

2.3.3 Personal Protective Equipment

Proper hand protection (gloves) when using steel framing materials is essential to prevent cuts and burns caused by sharp edges, fresh cuts using torches and saws, and steel exposed to direct sunlight or freezing temperatures.

FIGURE 2.2 PROTECTIVE EQUIPMENT

Protective eyewear and hearing protection is briefly discussed in a later section.

2.4 Power Tool Safety

Numerous power tools are used in steel framing, some of which may be new to the framer/carpenter. This section will examine the proper methods for using and maintaining the power tools used in steel frame construction.

The CSSBI *Installation Manual* contains a list of power and hand tools and accessories that are recommended for LSF construction. This list includes the following power tools that are felt to be necessary:

- 14 in (356 mm) chop saw with abrasive saw wheels
- 7-1/4 in (184 mm) circular saw with abrasive cut-off wheels
- variable speed reversible (VSR) screw gun with clutch (2500 rpm maximum)
- screw tip holder
- 5/16 in (8 mm) hex driver tip
- #2 Phillips and #2 Robertson screw tips

Optional power tools include the following:

- pneumatic nail gun
- power shear or nibbler
- automatic screw gun with extension handle
- cordless drills (12 volt or greater)

2.4.1 Electrical Hazards

The issue of electrical hazards is a primary concern. **Electrical cords** can be damaged if steel materials are dropped on them. Unlike wood, steel is an excellent conductor of electricity, and extra care must be taken to isolate steel from any source of electricity to prevent **accidental electrocution**. Since work must sometimes proceed in wet conditions, all equipment should conform with *OHSA Reg 182, 185, 191, 192, 193.*

The following general rules for power tools should be followed:

- periodically inspect electrical cords for cuts, kinks, worn insulation, and exposed wire;
- protect electrical cords so they do not present a tripping hazard, and are not exposed to potential damage from mobile equipment, welding, cutting, screwing, or burning operations;
- do not carry a tool by its electrical cord; do not pull the electrical cord from its receptacle by yanking on the cord;
- avoid operating power tools in damp locations; when this is unavoidable, use insulating platforms, rubber mats, and rubber gloves;
- store power tools to protect them from damage, dampness, and dirt;

- keep the electrical cord of a power tool away from the blade or bit;
- never cut off, bend back, or cheat the ground pin on three-prong plugs;
- make sure that extension cords are the right gauge for the job to prevent overheating, voltage drops, and tool burnout;
- always use a ground fault circuit interrupter (GFCI) with any portable electric tool;
- before making adjustments or changing attachments on power tools, disconnect electrical cords from the power source; switching off the tool may not be enough to prevent accidental startup.

2.4.2 Working with Steel

Small particles and filings of steel will be produced by cutting and drilling into steel. These can become imbedded in an unprotected eye and cause serious injury. The intense light generated while welding steel may cause temporary or permanent eye damage. Appropriate **eye protection** should always be worn when cutting, welding and drilling steel. See *OHSA Reg 20-24* for more information on eye protection.

High-pitched noise, especially from steel saws, grinders, impact drills, and abraders can cause temporary or permanent hearing damage. Prolonged exposure to noise levels exceeding ninety decibels (90 dB) is harmful to the worker and **ear protection** is highly recommended. Noise from powder actuated tools can also be very loud and damaging to the human ear.

2.5 General Job Site Safety

Construction activities produce safety hazards that by their very nature may not be obvious to any but the most experienced worker. Common hazards include such things as holes in the ground, openings in floors and walls, accumulated garbage, material scraps and discards, vehicular traffic, and confined work areas.

2.5.1 General Housekeeping

An important consideration for any job site is **general housekeeping**. General rules for safe housekeeping require daily job site cleanup and disposal of rubbish and scrap materials. All workers should keep their work areas and paths of travel tidy, well-lit and ventilated. Any potential hazards should be posted for the benefit of all workers on site.

More specifically, workers should always gather up and remove debris as often as required to keep work and travel areas orderly. Keep equipment and the areas around equipment clear of scrap and waste. Keep stairways, passageways, and gangways free of material, supplies and obstructions at all times. Secure loose or light materials stored on roofs or open floors to prevent blowing by wind. Pick up tools, material, and debris that may create a tripping hazard. Do not throw material or tools from one level to another.

The worker is reminded that **LSF material is 100% recyclable**. A special container should be set aside on the job site for all LSF scrap and discards.

2.5.2 Openings

The second consideration is the **covering or guarding of existing holes** to prevent workers from falling through openings or off the edge of a structure. *OHSA Reg 85, 86* covers the proper use of protection for openings and edges of structures.

2.5.3 Vehicular Traffic

Another important consideration of job site safety is **vehicular traffic**. Many large machines and vehicles are on the job site every day. Care must be taken regarding pinch points and turning radii for cranes, forklifts, and trucks. The backing up of any equipment should be done with assistance from a signaler. Proper training of equipment operators and signalers must be done to ensure a safe operation. Most concerns with respect to vehicular traffic on job sites are covered under *OHSA Reg 67-69, 85-86, 93-106.*

2.5.4 Site and Building Access

OHSA Reg 70-74, 78-84 cover the necessary considerations for **site and building access and egress** and must be understood and applied. Most aspects surrounding the use and maintenance of ladders, ramps, runways, and stairs can be found in this part of the OHSA.

2.6 Working At Heights

Working at heights requires special precautions. The first consideration is the requirement for a **fall arrest** and **travel restraint system**. *OHSA Reg 26, 78, 81-86, 126-135* address these issues. Generally if a worker is at risk of falling more than three (3) meters, the worker must be protected with a safety net, a fall arrest system, a travel restraint system, or guardrails.

2.6.1 Ladders, Scaffolding, and Openings

Workers must choose **ladders** free from defects and ensure they are using the proper ladder for the job at hand. Ladders should always be set up and tied off in the proper manner. A metal ladder resting against an

LSF member will easily slide if not properly secured. Check for ground and overhead electrical hazards when installing, moving or removing ladders or **scaffolds**. Climb ladders properly using the three-point method. Very specific regulations apply to ladder and scaffold installation.

Floor openings that cannot be protected with any of the previously mentioned methods must be covered with securely fastened planks, plywood, or steel plates.

2.6.2 Special Considerations for Steel Framing

Steel is **slippery when wet** or covered with ice and extra care must be taken in wet weather. Steel framing that is exposed to **direct sunlight** for long periods of time will reach temperatures high enough to cause minor burns. Steel framing that is subjected to **freezing temperatures** can also cause injury to workers. Hand protection (gloves) is recommended whenever working with steel framing materials under either of these conditions.

Free standing stud walls or floor joists without a subfloor properly fastened in place should not be used as a work platform. Joists are unstable until they have been sheathed and braced. Workers should not stand on the **top track** (top plate) of a steel frame wall, especially between wall studs. The steel track may deform under the weight of a person.

3. DESIGN AND MATERIAL STANDARDS

Chapter Objective

The purpose of this chapter is to familiarize the student with the different types of residential steel frame construction, steel frame design, the role of the designer and building code official, and the material standards and specifications for cold formed LSF materials.

Specific Learning Objectives

After completing this chapter the student should be able to:

Objective 3.1: State the three commonly used construction techniques for residential framing. Differentiate between stick-built, panelized, and modular construction;

Objective 3.2: Differentiate between the performance method and the prescriptive method for the design of a residential structure;

Objective 3.3: Demonstrate an awareness of the following documentation for residential construction and briefly describe the primary purpose of each:

- Part 9 National Building Code of Canada
- Part 4 National Building Code of Canada
- Canadian Standards Association S136: Design of Cold Formed Steel Members
- CSSBI Steel Framing for Part 9 Construction
- CSSBI Installation Manual
- CSSBI Member Selection Tables
- CCMC Technical Guide for Lightweight Steel Framing;

Objective 3.4: Demonstrate an understanding of the purpose and process of obtaining a building permit for a steel framed residential structure, and describe the role of the designer/engineer and the local building code official;

Objective 3.5: State the purpose of the ASTM sheet steel specifications and the CCMC certification number;

Objective 3.6: Define the term "yield strength" as it applies to load bearing steel framing members;

Objective 3.7: Demonstrate the ability to identify and select appropriate steel framing members by interpreting blueprints and the steel framing member identification codes and colours;

Objective 3.8: Sketch and label various views of both the standard C-section and U-section of a steel framing member;

Objective 3.9: Demonstrate an understanding of the following steel framing terms and briefly describe their application in residential steel framing:

- C-section
- U-section
- Built-up section
- Flat strap wall bracing
- Web stiffeners
- Clip angles

Suggested Activities

If the training center is near a roll former, it is very beneficial for the students to see how steel framing materials are produced, labeled, and identified (see Chapter 5 Manufacturing Steel). Contact a roll former in advance and ask permission for the students to visit the plant. Arrange transportation for the students and ensure they wear the appropriate personal protective equipment during the tour.

Classroom discussions, slide show presentations and exhibits of the actual steel framing members can be used for the majority of the learning objectives. If the opportunity presents itself, a trip to the local building department will familiarize the students with the building permit application and approval process. Inviting the local building code official to speak to the students about permits and inspection would also be beneficial.

Specific items that should be addressed in class include, but are not necessarily limited to, the following:

- an overview of stick-built and panelized construction with an open discussion around the advantages and disadvantages of each method. Take this opportunity to learn from the experience of anyone in the class who has participated in either form of construction;
- a quick review of the purpose and contents of Parts 4 & 9 of the *NBCC* and introduction to the other standards and documentation available for residential steel framing;
- a description of the standards and specifications for steel frame members. This should be followed by an opportunity for students to identify various steel framing members using the identification and colour codes;
- a slide show, classroom demonstration, or site visit to expose the students to the various shapes, sizes, and uses of steel framing members (C-sections and U-sections) and accessories.

Materials and Equipment

Material and equipment required for this chapter is summarized in the table below.

Item	Quantity
Slides showing roll forming of LSF materials	1
Transportation to roll forming plant	1
Ear protection, Gloves, Eyewear	12 each
Safety Hardhats, Boots, Tool Belt (student provides own)	
Roll former catalogues and price lists	12
NBCC Part 4 & Part 9 (reference) or OBC Parts 4 & 9	1
CSA S136: Design of Cold Formed Steel Members (reference)	1
CSSBI Steel Framing for Part 9 Construction (reference)	1
CSSBI Installation Manual & Member Selection Tables (reference)	1
CCMC Technical Guide for Lightweight Steel Framing (reference)	1
Steel Studs & Joists, Tracks, Fasteners, and Accessories	-
Flat Strap Bracing, Web Stiffeners, Clip Angles	-
Set of Residential Blueprints (Steel Frame)	1

3. DESIGN AND MATERIAL STANDARDS

3.1 Introduction

Design and material standards are very important aspects of residential construction. **Design standards** ensure that the load bearing structural members of a home will be capable of carrying the **live and dead loads** that are created by the structure, the occupants, and the climatic conditions. **Material standards** ensure that the materials used to construct the home meet minimum requirements for **quality**, **strength** and **durability**.

Steel framing techniques are essentially similar to wood construction, so someone who has experience framing homes using wood will find some similarities with steel framing. The material standards for steel framing are however quite different from wood, and so too are some of the design standards.

This chapter is divided into the following sections:

Section 3.2: Types of Construction
Section 3.3: Framing Design and Building Codes
Section 3.4: Material Standards and Specifications
Section 3.5: Framing Member Designation

The purpose of this chapter is to familiarize the student with the different types of residential steel frame construction, steel framing design, the role of the designer and building code official, and the material standards for cold formed LSF materials.

3.2 Types of Construction

Residential steel framing can be categorized into three construction techniques: **stick-built**; **panelized**; and **modularized**.

3.2.1 Stick-Built Construction

Stick-built construction describes the steel framing technique where a house frame is built on site, normally one piece at a time. This method is similar to stick-built wood framing where the traditional 2 x 4 in, 2 x 6 in, and 2 x 8 in "**sticks**" of wood are replaced by steel members. The spacing of joists, wall studs and rafters are similar, normally at 16 in (405 mm) or 24 in (610 mm) intervals.

Stick-built construction is the most basic method of steel framing. Construction at a building site may borrow from some of the techniques of panelized construction (described below), for example when an entire wall frame is assembled on a floor and tilted vertically into place.

FIGURE 3.1 FLOOR STICK FRAMING

3.2.2 Panelized Construction

Panelized construction uses large platform tables and jigs (templates) to build framing assemblies. Floor and wall assemblies, framed openings and roof trusses are put together in a controlled work space. The **assemblies** are then transported to the job site, lifted into place by hand or mechanical means, and attached together. Panelized construction may also be done on the job site using a panel table.

Framing homes with this technique is repetitive and reduces the hours of framing work normally needed on the job site. This is especially beneficial to the worker and contractor during inclement weather.

FIGURE 3.2 TRANSPORTING WALL FRAMING

3.2.3 Modularized Construction

Modularized construction, where an entire home or construction unit is assembled in a factory, may be employed to good advantage, particularly when the unit is required in an area not well serviced by the residential construction industry.

3.3 Framing Design and Building Codes

A certain amount of structural analysis goes into the framing design of every home be it made from steel, timber, concrete, or masonry.

3.3.1 Performance Method

If an architect is retained to do the entire design, a structural engineer is often consulted to design the building frame. The use of a design professional is sometimes called the **performance method** because they determine the outcome or performance of the design through calculations.

3.3.2 Prescriptive Method

Sometimes the framing design entails the selection of framing members from a table for given loads, local climatic conditions and other factors. These **member selection tables** have been developed using structural analysis and/or testing. The building inspection authorities recognize the member selection tables when they are embodied within a recognized building code.

Part 9 of the *National Building Code of Canada (NBCC)*, or the equivalent part in the various provincial building codes, provides a **prescriptive method** for framing residential buildings with **wood**. *Part 9 NBCC* tables (or provincial equivalent) show minimum wall stud sizes, fastener requirements (number and length), and maximum spans for various sizes of floor joists, lintels, and roof rafters. A structural design professional is seldom required unless the building size exceeds certain limits or the local building authority demands it.

Due to its relatively new use, ***a prescriptive method for load bearing steel framing is not in the NBCC or provincial building codes***. The exception is steel framed non-load bearing walls that are mainly partition walls (see Chapter 16 Non-Load Bearing Walls).

The frame of a home, be it made from steel or wood, is designed in accordance with the loading requirements in *Part 4 NBCC* (or provincial equivalent). One exception is snow loading provisions in *Part 9 NBCC* for wood framing.

When the frame is to be designed in steel, *Part 4 NBCC* refers to the Canadian Standards Association (CSA) Standard 136: *Design of Cold Formed Steel Members*. This is the recognized design specification for lightweight steel cold formed into C-sections and other shapes for the purpose of supporting structural loads.

CSA S136 has been in use for several years and the capabilities of steel construction on which it is based are well known. Also, *Part 4 NBCC* requirements for snow loading are different and more onerous than in *Part 9 NBCC*. Therefore, from a structural perspective, steel framing is more robust when compared to wood framing.

3.3.3 Floor and Wall Framing: CSSBI Protocol

Until recently, an engineer had to be retained to design the load bearing steel frame in its entirety, in accordance with *Part 4 NBCC* or provincial building codes. However, a protocol developed by the Canadian Sheet Steel Building Institute (CSSBI) entitled ***Steel Framing for Part 9 Construction*** can now be used for the **floors** and **walls** for residential dwellings that conform to the following limits:

- 600m^2 maximum building area;
- 3 storey maximum;
- 7.6m maximum width;
- maximum hourly wind pressure, q (1/30) up to 0.6 kPa;
- maximum specified roof snow load up to 2.5 kPa.

Embodied in CSSBI *Steel Framing for Part 9 Construction* are the following:

- Canadian Construction Materials Centre (CCMC) Certification Numbers;
- CSSBI *Member Selection Tables*;
- CSSBI *Installation Manual.*

The Canadian Construction Materials Centre (CCMC) is a standing body linked to the National Research Council. CCMC evaluates construction methods and materials not contained in the building codes. Its purpose is to provide contractors with alternate construction methods and materials that most building inspectors will accept. CCMC has prepared a ***Technical Guide for Lightweight Steel Framing***. The purpose of the CCMC *Technical Guide* is to satisfy the intent and requirements of the *NBCC*, when member selection and assembly are in accordance with certain prescribed limits.

Suppliers of cold formed LSF must obtain a **CCMC certification number**. The manufacturer's name and CCMC certification number must be displayed on each framing member to demonstrate compliance to all applicable standards.

In accordance with the CCMC *Technical Guide*, framing members (joists, headers, wall studs, lintels, etc.) must be selected from the **CSSBI *Member Selection Tables***. The member selection tables show allowable spans and lengths of various member sizes for given loading and member spacing. The CSSBI tables are based on the design principles of CSA S136 and *Part 4 NBCC* (see Chapter 4 Design Process).

Once the framing members are selected, the **CSSBI *Installation Manual*** should be used as a reference for the assembly details. The *Installation Manual* is based on careful research and represents conservative framing and connection techniques.

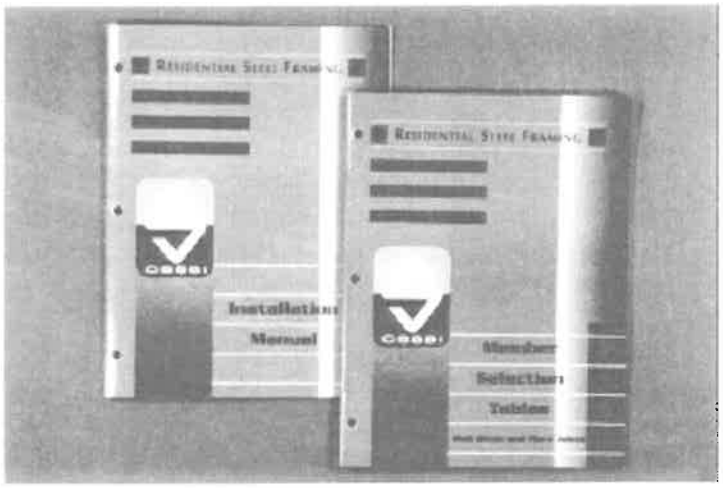

FIGURE 3.3 CSSBI MEMBER SELECTION TABLES AND INSTALLATION MANUAL

3.3.4 Roof Framing

Steel framed roofs are similar to conventional wood rafter or truss construction. There is no prescriptive method for steel framed roofs (rafter or truss type) in Canada at this time. The builder must retain an engineer to design the roof framing members and details.

Another option is to use a proprietary manufactured truss system developed with professional design guidance and stamped by an engineer. The local building authority will normally accept this approach. It is anticipated that a prescriptive method for steel framed roofs will be incorporated into CSSBI *Steel Framing for Part 9 Construction*.

3.3.5 Other Conditions

Certain local construction requirements and practices may be beyond the CSSBI *Steel Framing for Part 9 Construction*. When this occurs, a structural engineer must be consulted to determine the framing member shapes, sizes, and assembly details.

Load bearing LSF design is a unique field of structural engineering. Load bearing structural members, cold formed from sheet steel, must be designed with suitable geometry to prevent buckling failure. The framing members and assembly details in CSSBI *Steel Framing for Part 9 Construction* have been appropriately designed and selected with this in mind.

If the roll former, distributor, supplier or contractor depart from the CSSBI standards, the services of a qualified LSF engineer should be sought and attention paid to member size, shape, web depth, openings, connections, and fastening details.

3.3.6 Building Code Official

The **building code official** has the responsibility and authority to review and approve construction within a jurisdiction. This official is sometimes referred to as the **building inspector** or **code official** and the jurisdiction can be a town, city, municipality, or region. The building code official interprets and applies provisions and rules from the *NBCC*, provincial and local building bylaws. All construction must be acceptable to the building code official.

Building code officials may not be as familiar with steel framing for residential construction as they are with alternate materials. It is good practice to discuss steel framing with the building code official before material is purchased and construction initiated, in order to gain an understanding of the requirements with respect to steel framing.

The official will normally accept residential plans showing an engineer's stamp and, in some instances, some assurance that the completed construction complies with the submitted drawings. Although the floor and wall design may be in accordance with the CSSBI *Steel Framing for Part 9 Construction* and not need a stamp, it is always good practice to discuss it with the building office when seeking a building permit.

3.3.7 LSF Engineer

Since LSF design is a unique field of structural engineering, it is important that the engineer understand load bearing lightweight steel frame design and CSA S136 to provide both a reliable and cost-effective design. An LSF engineer should also be receptive to new suggestions and ideas from the field.

The member selection listings and framing details in the CSSBI protocol are **very conservative**, particularly with respect to maximum allowable floor spans and the number of fasteners in some assembly details. A knowledgeable LSF engineer may provide more cost-effective design solutions.

3.3.8 Framing Details

Framing details are important to the success and cost of a steel-framed house because they impact directly on material and labour costs. Framing details are graphical representations of how the framing members are assembled and connected. They show the arrangement and number of members, member size, and number and location of fasteners in the connections.

Residential steel framing is relatively new and more efficient details are constantly being developed. In addition to the CSSBI *Installation Manual* reference can be made to *Residential Cold-Formed Steel Framing* (*2nd Ed.*), NAHBA Research Center for American Iron and Steel Institute (AISI). This publication is available from AISI. If the framer makes use of the NAHBA publication, they may need prior approval from an engineer and the building inspector.

3.4 Material Standards and Specifications

The CSSBI *Installation Manual* describes grades, thicknesses, coating weights and designations for LSF used in residential construction. The following is a summary of the information from Section 3 Manufacturing, Materials and Design of the CSSBI *Installation Manual.*

3.4.1 Standard Sheet Steel Material Specifications

LSF members must be cold formed (a.k.a. cold rolled, roll formed) from structural quality steel complying with the requirements of one of the following sheet steel specifications:

(a) ASTM A653/A653M Specification for Sheet Steel
Zinc-Coated (Galvanized) or Zinc-Iron Alloy-Coated (Galvannealed) by the Hot-Dip Process
Grades 33, 37, 40 and 50, Class 1 and 3.
(Metric) Grades 230, 255, 275 and 340, Class 1 and 3.

(b) ASTM A792/A792M Specification for Sheet Steel
55% Aluminum-Zinc Alloy-Coated by the Hot-Dip Process
Grades 33, 37, 40 and 50A
(Metric) Grades 230, 255, 275 and 345A.

These specifications are of secondary importance to the framer. As long as the roll former or supplier has a CCMC certification number and shows it and their name on each framing member, the framer is assured that the sheet steel meets the requirements of at least one of the above material specifications.

3.4.2 Yield Strength

Yield strength is the property that indicates how much **stress** (load) the material can withstand before it begins to **yield** (fail). Yield strength is indicated by "Grade" in the material specification. In Canada, the standard minimum yield strength of all load bearing steel members and connection accessories is as follows:

- **33,000 psi**[1] (230 MPa) for thickness ≤ 0.048in (1.22mm)
- **50,000 psi** (345 MPa) for thickness ≥ 0.060in (1.52mm)

Again, the framer should look for the CCMC certification number and supplier name to be assured that the yield strength meets the minimum requirement.

[1] Pounds per square inch. Divide psi by 1000, the unit becomes ksi or kips per square inch. Grade 33 in the ASTM material specification refers to 33,000 psi or 33 ksi. Grade 50 refers to 50,000 psi or 50 ksi.

3.4.3 Standard Steel Framing Member Thickness

Standard steel thicknesses have been established for cold formed steel framing members. Canadian manufacturers of residential steel framing will normally **colour code** one end of each cold formed member. Standard nominal design thicknesses and the colour codes are shown in Table 3.1.

Table 3.1 Colour Codes for Standard Thicknesses

Colour	Nominal Design Thickness		Gauge Number
	inch	mm	
Red	0.033	0.84	20 light
White	0.036	0.91	20
Brown	0.044	1.12	18 light
Yellow	0.048	1.22	18
Green	0.060	1.52	16
Orange	0.075	1.91	14
Blue	0.105	2.67	12

The real or actual thickness of steel in a framing member is somewhat greater than the nominal thickness due to the application of a protective coating (see Section 3.4.1 Standard Sheet Steel Material Specifications).

The coating does not add to the strength of the member and is ignored in design calculations when determining framing member strength. The framer should look for the colour code or designation on the steel member to identify the thickness.

3.4.4 Cold Formed LSF Members

The **C-section** shown in Figure 3.4 is the most common shape of cold formed steel frame members in residential construction. It is the primary section used for wall studs, floor joists, and roof framing. The C-section is chosen for its efficiency in sustaining loads. The section is composed of a **web**, **two flanges** and **stiffening elements** (lips) on the flanges.

The stiffeners give the member its compressive strength and must not be cut, removed or otherwise tampered with unless indicated by an LSF engineer.

The LSF roll former manufactures standard C-sections in a variety of sizes. The overall steel section geometry of a **standard wall stud** tends to match that of dimensional framing lumber:

- the out-to-out flange width is 1-5/8 in (41 mm);
- and the out-to-out web depth is 3-5/8 in (92 mm).

Unlike wood framing however, the web depth of **larger LSF members** that are often used for joists, lintels, headers, and rafters is the exact

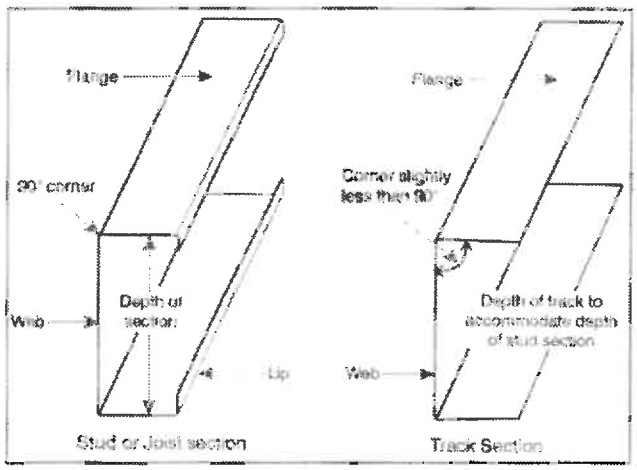

FIGURE 3.4 FRAMING MEMBER CROSS-SECTIONS

dimension of the nominal designation. For example, an 8 in C-section has an out-to-out web depth of exactly 8 in (203 mm).

The top and bottom members (plates) that are used to hold wall studs in place, or as rim joists in the floor system, are called **U-sections** or **tracks**. These may be seen in Figure 3.4. U-sections are similar to C-sections but do not have stiffening lips on the flanges. The overall section geometry of U-sections is similar to C-sections but the web depth for the nominal size is measured inside the flanges. This allows C-sections (studs and joists) to fit inside the track.

3.5 Framing Member Designation

A standard method of designating load bearing LSF members is currently being developed for North America. The majority of roll formers mark each member at regular intervals with an embossment, label or ink stamp.

3.5.1 Member Identification Code

The designation standard used in the CSSBI Member Selection Tables utilizes the LSF member flange width, web depth, and steel thickness to identify a member. The designation is made up of the following elements:

- Member **flange width** expressed in millimetres
- Member **web depth** expressed in millimetres
- Design **material thickness**, expressed in millimetres

A framing member designation is illustrated by the following example code:

41 x 152 x 0.84

where:

- **41** indicates a flange of 41 mm (1-5/8 in)
- **152** indicates a member web depth of 152 mm (6 in)
- **0.84** indicates a design steel thickness of 0.84 mm (0.033 in)

3.5.2 Standard Load Bearing Members

The standard **load bearing residential steel framing members** manufactured and used in Canada are listed in Table 3.2 and can be used for a variety of floor and wall loading combinations.

Table 3.2 Standard Loadbearing Member Sizes and Designations

Application	Flange Width		Web Depth		Design Thickness		Designation
	inch	mm	inch	mm	inch	mm	
Studs (2x4 nominal)	1-5/8	41	3-5/8	92	0.033	0.84	41 x 92 x 0.84
	1-5/8	41	3-5/8	92	0.044	1.12	41 x 92 x 1.12
	1-5/8	41	3-5/8	92	0.060	1.52	41 x 92 x 1.52
Studs, Headers, Joists (2x6 nominal)	1-5/8	41	6	152	0.033	0.84	41 x 152 x 0.84
	1-5/8	41	6	152	0.048	1.22	41 x 152 x 1.22
	1-5/8	41	6	152	0.060	1.52	41 x 152x 1.52
Headers, Joists, Lintels (2x8 nominal)	1-5/8	41	8	203	0.033	0.84	41 x 203 x 0.84
	1-5/8	41	8	203	0.048	1.22	41 x 203x 1.22
	1-5/8	41	8	203	0.060	1.52	41 x 203 x 1.52
	1-5/8	41	8	203	0.075	1.91	41 x 203 x 1.91
Headers, Joists (2x10 nominal)	1-5/8	41	10	254	0.048	1.22	41 x 254 x 1.22
	1-5/8	41	10	254	0.060	1.52	41 x 254 x 1.52
	1-5/8	41	10	254	0.075	1.91	41 x 254 x 1.91

3.5.3 Standard Non-Load Bearing Members

Standard **non-load bearing** LSF member sizes commonly used in Canada are shown in Table 3.3. A load bearing member may be used in a non-load bearing application.

A non-load bearing stud or track may never be used in a load bearing (axial and/or wind loading) application.

Table 3.3 Standard Non-Load Bearing Member Sizes

Application	Web Depth		Flange Width		Minimum Uncoated Thickness of Steel	
	inch	mm	inch	mm	inch	mm
Interior Bulkhead Construction	1-5/8	41	1-1/4	32	0.018	0.46
Miscellaneous Interior Framing	2-1/2	64	1-1/4	32	0.018	0.46
Interior Non-Load Bearing Studs	3-5/8	92	1-1/4	32	0.018	0.46
	6	152	1-1/4	32	0.018	0.46

3.5.4 Standard U-Sections

Standard U-sections, also known as **tracks**, are available to accommodate all sizes of joists and studs. It is important to note that track sections are usually not designed to carry structural loads without the in-line placement of load bearing framing members. Refer to Chapters 10 and 11 for further discussion of in-line framing. An engineered design is necessary when in-line framing is not used.

3.5.5 Built-up Sections

Track sections can be combined with C-sections to form built-up sections. Refer to Figure 3.5 for examples of some commonly used built-up sections.

Built-up sections are used for floor beams, headers, lintels, trimmers, jamb studs, and at other locations requiring extra strength. All built-up sections should be made from members of equal thickness, and fastened together at least every 24 in (600 mm) on centre (o/c). The members used in built-up sections must be continuous lengths unless their purpose is non-structural, such as closing off rough openings.

The structural capacity of these built-up sections must be determined by analysis in accordance with CSA S136. The CSSBI *Member Selection Tables* gives the capacity for common sections.

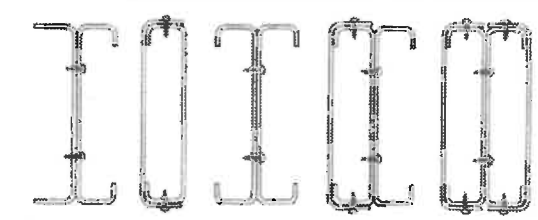

FIGURE 3.5 BUILT UP SECTIONS

3.5.6 Accessories

Manufacturers of LSF in Canada also produce a range of accessories required for residential construction, including flat strap face bracing, web stiffeners, and clip angles. The minimum geometric standards for bracing, web stiffeners and clip angles are described in the following paragraphs.

Horizontal Flat Strap Wall Bracing - is used to provide rotational restraint for load bearing studs. It must span the studs over the length of the wall, except at openings, and it must be attached to both faces of the stud. Refer to Chapter 11 for further guidance. Horizontal flat strap bracing is usually 1.5 x 0.033 in (38 x 0.84 mm) sheet steel material.

Diagonal Flat Strap Wall Bracing - is used to resist wind pressures and to provide racking resistance under seismic loading. The number of diagonal braces needed per floor depends on wind or earthquake loading. Refer to Chapter 11 for further guidance. Diagonal flat strap bracing is usually 3 x 0.036 in (75 x 0.91 mm) sheet steel material.

Web Stiffeners - are used in all locations where a concentrated load acts on a floor joist such as from an inline overhead load bearing wall stud. A web stiffener can be a piece of stud or track cut in the field or supplied as an accessory by the roll former. If a field-cut stud or track is used as a web stiffener, it must have a minimum steel thickness of 0.033 in (0.84 mm) or 0.044 in (1.09 mm) respectively. The web stiffener must have a cut length not greater than the floor joist web depth and it must be fastened to the back of the web. When supplied as an accessory, the stiffener should have a thickness of 0.036 in (0.91 mm) and a 1-1/4 in (31 mm) flange allowing it to fit within the 1-5/8 in (41 mm) flange of the joist. It is cut approximately 3/16 in (5 mm) shorter than the joist depth to facilitate installation and reduce floor squeaks.

Clip Angles - are formed angled sections used to connect floor joists to headers, lintels to king studs, or headers to trimmers. The minimum thickness for these clip angles is 0.060 in (1.52 mm). The length must be no less than the depth of the joist, minus 1 in (25 mm). See Figure 3.6 for an example.

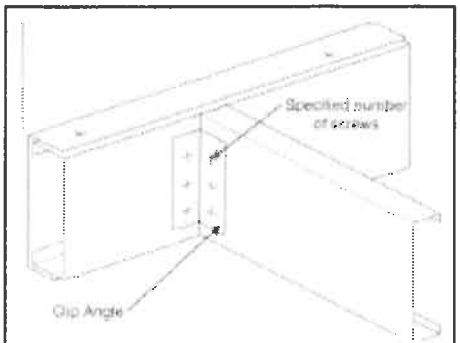

FIGURE 3.6 CLIP ANGLE

4. DESIGN PROCESS

Chapter Objective

The purpose of this chapter is to identify the design and member selection process for a steel-framed house using the following CSSBI publications:

- *Steel Framing for Part 9 Construction;*
- *Installation Manual;*
- *Member Selection Tables;*

and the appropriate building codes.

This chapter provides the student with the necessary information to allow them to select stud and joist members for their own residential projects that fall within the limits of the prescriptive method previously described in Chapter 3 Design and Material Standards.

Reference to the National Building Code of Canada (*NBCC*) and the Ontario Building Code (*OBC*) is made, specifically with regards to the determination of design factors with respect to climate, and the calculation of live and dead loads acting on the structure. The structural design of roof framing is also briefly discussed, but the student is reminded that the design of a steel framed roof must be done by a design professional (engineer, architect).

Specific Learning Objectives

After completing this chapter, the student should be able to:

Objective 4.1: Interpret and obtain framing information and details from blueprints for steel-framed residential structures

Objective 4.2: Utilize the NBCC and/or OBC to identify the following climatic design factors for a residential dwelling:

- Snow Load (S_s)
- Rain Load (S_r)
- Hourly Wind Pressure (q 1/30)
- Seismic Data (Z_a, Z_v, v)

Objective 4.3: Use blueprints, CSSBI *Steel Framing for Part 9 Construction*, the *NBCC* and/or *OBC* to determine the live and dead loads for exterior walls, floor systems, and roof structures of a steel-framed residential dwelling.

Objective 4.4: Demonstrate the ability to use the CSSBI *Installation Manual*, wind and seismic design factors to determine the required diagonal flat strap bracing for the exterior wall systems of a steel-framed residential dwelling.

Objective 4.5: Demonstrate a basic understanding of floor joist orientation and span design, and be able to identify floor joist orientation and dimensions from building plans.

Objective 4.6: Describe the differences between a single span and continuous span floor joist.

Objective 4.7: Briefly describe the following two selection criteria methods available to size floor joists:

- L/480 Deflection Limit
- L/360 Deflection Limit

Objective 4.8: Given a set of blueprints showing floor joist orientation, spacing and spans, demonstrate the ability to use the CSSBI *Member Selection Tables* to select the appropriate size and thickness of single span floor joists to carry specified loads.

Objective 4.9: Given a set of blueprints showing floor openings, trimmer and header dimensions, demonstrate the ability to use the CSSBI *Member Selection Tables* to select the appropriate size, thickness, and assembly details of header and trimmer joists to carry specified loads.

Objective 4.10: Given a set of blueprints showing floor plans, exterior and interior walls, wall heights and stud spacing, demonstrate the ability to use the CSSBI *Member Selection Tables* to select the appropriate size and thickness of wall studs to carry specified loads.

Objective 4.11: Given a set of blueprints showing lintel locations, dimensions, and a schedule detailing all rough openings, demonstrate the ability to use the CSSBI *Member Selection Tables* to select the appropriate size, thickness, and assembly details of lintels, head sills, window sills, and king-jack stud assemblies to carry specified loads.

Objective 4.12: Describe the following forces at work on a roof structure:

- Dead loads
- Snow, ice and rain live loads
- Wind pressure and suction

and recognize the need for a design professional to design roof rafters, ceiling joists and roof trusses for a steel-framed residential dwelling.

Suggested Activities

The recommended format for training for this chapter is classroom instruction followed up with a reinforcement of the design process during the construction of a sample dwelling. The instructor should review the importance of the *NBCC* and the *OBC* with respect to residential design. The sections that are relevant to the selection of climatic design factors, live and dead loads should be referenced. Students should have the opportunity to view the building code and become familiar with the sections noted later in this chapter.

Classroom discussion, slide show presentations, exhibits of the actual steel framing members, and frequent reference to the building codes and CSSBI publications can be used for the majority of the learning objectives. The design example is a 2,270 ft^2 (211 m^2) two-storey house with a full basement and two-car garage (see front elevation). For the purposes of calculated live and dead loads, the home is assumed to be located in Burlington, Ontario. Plans, elevations, and steel framing details for this house may be found at the end of this chapter.

Specific items that should be addressed in class include, but are not necessarily limited to, the following:

- a quick review of the blueprints, symbols and dimensioning; deal with any inquiries as to the interpretation of the plans and elevations of the design example;
- a brief description of live and dead loads associated with residential dwellings; description of where and how information on live and dead loads can be found or calculated using the building codes;
- a clear, concise, and step-by-step procedure for choosing the size and thickness of LSF members; utilize the CSSBI Residential Steel Framing publications to assist in the process;
- the suggested sequence for sizing LSF members and determining assembly details is as follows: first floor joists; second floor joists; headers and trimmers; first floor wall studs; second floor wall studs; lintels; window sills and head sills; king-jack assemblies.

Materials and Equipment

Material and equipment required for this chapter is summarized in the table below:

Item	Quantity
CSSBI *Steel Framing for Part 9 Construction* (reference)	2
CSSBI *Installation Manual*	1 each
CSSBI *Member Selection Tables*	1 each
National Building Code of Canada (reference)	1
Ontario Building Code (reference)	1
Blueprints for Design House	1 each
Samples of joist, stud and track LSF members	-
Samples of LSF accessories including flat strap bracing, fasteners, clip angles, etc.	-

4. DESIGN PROCESS

4.1 Introduction

Lightweight steel is a relatively new material for residential framing contractors, and the design and selection of LSF members is not as well understood as wood framing. This chapter examines the design and member selection process for a steel-framed house using the following CSSBI publications:

- *Steel Framing for Part 9 Construction*
- *Installation Manual*
- *Member Selection Tables*

in conjunction with the Ontario Building Code (*OBC*) and the National Building Code for Canada (*NBCC*).

This chapter provides the student with the necessary information to allow them to select stud and joist members for their own residential projects that fall within the limits of the prescriptive method previously described in *Chapter 3 Design and Material Standards.*

The structural design of roof framing is also briefly discussed, but the student is reminded that the design of a steel framed roof must be done by a design professional (engineer, architect).

This chapter is divided into the following sections:

Section 4.2: Design Example
Section 4.3: Design Loads
Section 4.4: Floor Joists and Track
Section 4.5: Wall Studs and Track
Section 4.6: Wall Openings
Section 4.7: Wall Bracing
Section 4.8: Roof Framing
Section 4.9: Summary of LSF Members

4.2 Design Example

In order to illustrate the design process and prescriptive method for selecting steel framing members, a 2,270 ft^2 (211 m^2) two-storey house with a full basement and two-car garage has been chosen. For the purposes of calculated live and dead loads, the home is assumed to be located in southern Ontario. The design process described below, along with the appropriate design factors, could be applied for most other Canadian locations. Plans, elevations, and steel framing details for this house may be found at the end of this chapter.

The example house cladding is a combination of brick veneer and vinyl or metal siding. The entire ground floor and front (east) elevation of the home is clad in brick veneer. Figure 4.4 Detail "A" illustrates the wall section details for the brick veneer.

The second floor side and back elevations of the design house are clad with vinyl or metal siding. The siding is assumed to extend below the level of the second floor joists and lap over the ground floor brick veneer. Because of the thickness of the ground floor walls (with brick veneer), the second floor exterior load bearing stud walls will not sit exactly on top of the ground floor load bearing stud walls. Figure 4.4 Detail "B" illustrates the slight 'cantilever' design of the second floor joists where the joists are perpendicular to the exterior wall.

Where the second floor joists run parallel to the exterior wall, a 16 in (400 mm) wide **ladder** or **lookout** assembly is required to finish the second floor joist system. This ladder assembly is also a 'cantilever' design and is shown in Figure 4.4 Detail "C". The detail shows the second floor load bearing stud walls are not sitting exactly on top of the first floor load bearing walls.

Both of these second floor details have been designed and approved by a professional engineer.

4.2.1 Dimensions and Specifications

The house has the following physical dimensions and specifications:

- Overall Width (including garage): 39'-9" (12.12 m)
- Overall Length (including garage): 50'-9" (15.47 m)
- Ground Floor Wall Height: 9'-9" (2.97 m)
- Second Floor Wall Height: 8'-0" (2.44 m)
- Wall Stud Spacing: 16 in (400 mm) o/c
- Floor Joist Spacing: 16 in (400 mm) o/c
- House Roof Framing: steel roof trusses 24 in (600 mm) o/c
- House Roof Slope: 7.75:12
- Garage Roof Framing: steel rafters and ceiling joists 24 in (600 mm) o/c
- Garage Roof Slope: 9:12
- Roof Overhang: 15 in (381 mm)

4.2.2 Drawings

The drawing schedule for the design example is as follows:

• Basement and Ground Floor Framing Plan:	Figure 4.1
• Ground Floor and Second Floor Framing Plan:	Figure 4.2
• Second Floor and Roof Framing Plan:	Figure 4.3
• Wall Sections:	Figure 4.4A, B & C
• Floor Joist Details:	Figure 4.5A
• Wall Stud Details:	Figure 4.5B
• Front Elevation:	Figure 4.6

4.2.3 Acknowledgements

The design example house is a slightly modified version of a steel framed house built in Burlington, Ontario. The following firms were responsible for the Burlington house and their assistance in the preparation of this design example is greatly appreciated:

Architect:	Viljoen Architect Inc.
Home Builder:	Monarch Construction Limited
Steel Framing Design:	Stantech Consulting Inc.
Steel Framing Contractor:	Sungate Construction

4.3 Design Loads

The User's Guide in the CSSBI *Member Selection Tables* provides a detailed process for the determination of loads and subsequent LSF member selection for floors and walls. Before beginning, the designer/framer must collect all of the necessary information. House plans showing the direction and span of floor joists and roof framing members, floor openings, wall heights, and wall openings will be required.

Design loads are determined by referring to *NBCC* and/or the provincial building code. In most provinces, the provincial building code closely follows the *NBCC*. Our design example house, located in Burlington, Ontario must conform to the Ontario Building Code (OBC 1997) and so it will be referred to from this point onwards.

The student is reminded that **dead load** is the load created by the weight of floors, walls, partitions, ceilings, roofs and other permanent elements of the structure. **Live load** is created by transient or sustained forces such as occupancy of the structure, and the natural forces of wind, snow, rain and seismic activity.

4.3.1 Design Factors

Appendix C of the *NBCC* or Table 2.5.1.1 in the *OBC* gives the following design factors for a home built in Burlington, Ontario:

- Ground Snow Load: S_s = 0.8 kPa
- Ground Rain Load: S_r = 0.4 kPa
- Hourly Wind Pressure (1/30): q = 0.43 kPa
- Seismic Data: Z_a = 1
  Z_v = 0
  v = 0.05

4.3.2 Live Load - Snow, Ice and Rain

The live load on a roof due to snow, ice and rain (S) is determined separately for the exterior wall that supports the roof and the roof framing members.

4.3.2.1 Exterior Walls

The live load (S) for the **exterior walls** of the house is determined based on CSSBI *Steel Framing for Part 9 Construction* using the following;

$$S = C_b x\ S_s + S_r$$

where: C_b = basic roof snow load factor = 0.8 (*as per CSSBI Steel Framing for Part 9 Construction*)
S_s = ground snow load = 0.8 kPa
S_r = ground rain load = 0.4 kPa

Therefore, the live load (S) on the exterior walls from the overlying roof is:

$$S = C_b \times S_s + S_r$$
$$S = 0.8 \times 0.8 + 0.4$$
$$S = 1.04 \text{ kPa } (21.7 \text{ psf})$$

4.3.2.2 Roof Structures

The live load (S) for the **house and garage roof structures** must be determined using *OBC* Section 4.1.7.1.(1) as follows:

$$S = S_s (C_b C_w C_s C_a) + S_r$$

where: S_s = ground snow load = 0.8 kPa
C_b = basic roof snow load factor[1] = 0.8
C_w = wind exposure factor[2] = 1.0
C_s = slope factor[3]
C_a = accumulation factor[4]
S_r = ground rain load = 0.4 kPa

Note 1: as per *OBC* Section 4.1.4.1

Note 2: the design example is located in an urban community and wind cannot be counted on to reduce the accumulation of snow on the roof. Therefore, the wind exposure factor of 1.0 will not be reduced

Note 3: The slope of the house roof is 7.75:12 (32.8°)
The slope of the garage roof is 9:12 (36.9°).
C_s is determined in accordance with *OBC* Section 4.1.7.1.(4) because the house has asphalt shingles and therefore has a non-slippery roof. Since the slopes of the house and garage roofs are greater than 30° but not greater than 70°:

$$C_s = \frac{70° - \text{roof slope}}{40}$$

$$C_s \text{ for the house} = \frac{70 - 32.8}{40} = 0.930$$

$$C_s \text{ for the garage} = \frac{70 - 36.9}{40} = 0.828$$

If the design house had a steel roof, the lower slope factor for slippery roofs could be used as per *OBC* Section 4.1.7.1.(5).

Note 4: The house roof in the open, at the highest level of the house, is not subject to accumulation.
Therefore for the house roof C_a = 1.0
OBC Section 4.1.7.1.(7) (c) requires that increased non-uniform snow load be accounted for on roofs subject to snow accumulation. A slight accumulation of snow could occur on the south portion of the garage roof closest to the house. A 12% average accumulation is assumed for the garage roof.
Therefore for the garage roof C_a = 1.12

Therefore, for the house roof the live load (S) due to snow, ice and rain is calculated as:

$$S = S_s (C_b C_w C_s C_a) + S_r$$
$$S = 0.8 (0.8 \times 1.0 \times 0.930 \times 1.0) + 0.4$$
$$S = 0.995 \text{ kPa } (20.8 \text{ psf})$$

and for the garage roof the live load (S) due to snow, ice and rain is calculated as:

$$S = S_s (C_b C_w C_s C_a) + S_r$$
$$S = 0.8 (0.8 \times 1.0 \times 0.828 \times 1.12) + 0.4$$
$$S = 0.994 \text{ kPa } (20.8 \text{ psf})$$

4.3.3 Live Load - Wind and Earthquake

The walls of the house need to be diagonally braced against the lateral forces created by wind and earthquake. The bracing required can be determined from Table 6.3.3 of the CSSBI *Installation Manual.*

For the design example the following design factors have already been determined in Section 4.3.1 of this chapter using the *OBC* Table 2.5.1.1:

$q =$ 0.43 kPa
$Z_a =$ 1.0
$Z_v =$ 0
$v =$ 0.05

4.3.3.1 Wind Bracing

The wind pressure (q) must first be rounded up to 0.5 kPa. This will result in a conservative design and allow CSSBI *Installation Manual Table 6.3.3* to be used to determine the required wind bracing. For a two-storey house with q (1/30) = 0.5 kPa the required diagonal bracing is:

Ground Floor:	4 braces per wall
Second Floor:	2 braces per wall

4.3.3.2 Earthquake Bracing

CSSBI *Installation Manual Table 6.3.3* shows that when $Z_a = 1.0$, $Z_v = 0$ and $v = 0.05$, the required diagonal bracing for a two-storey home to resist earthquakes is:

Ground Floor:	2 braces per wall
Second Floor:	2 braces per wall

Probability dictates that the design wind and the design earthquake will not occur at the same time. They are independent events. The higher requirement

governs the home design. By satisfying the diagonal bracing requirement for wind, the earthquake requirement is also satisfied.

Figures 4.2 and 4.3 show the location of the diagonal bracing for the ground and second floor exterior walls respectively.

4.3.4 Live Load - Floors

Floor live load is transient loading that does not include any part of the structure of the house. Floor live load is created by occupancy (i.e. people, furniture, etc.) of the structure. The *OBC* Table 4.1.6.3 specifies that the live load for bedrooms be taken as 1.4 kPa, and the live load for other residential areas (living quarters) be taken as 1.9 kPa.

Therefore the following live loads will be used when selecting LSF joists for the floors:

Ground Floor Live Load =	1.9 kPa (39.7 psf)
Second Floor Live Load =	1.4 kPa (29.2 psf)

4.3.5 Dead Loads

Dead loads consist of the weight of the floors, walls, partitions, roof and other permanent parts of the house structure.

It is common practice to use the following dead loads for steel frame residential construction:

Walls and Partitions	= 0.25 kPa (5.2 psf)
Ground Floor Dead Load	= 0.5 kPa (10.4 psf)
Second Floor Dead Load	= 0.45 kPa (9.4 psf)
Top Chord of Roof Trusses	= 0.15 kPa (3.1 psf)
Garage Rafters	= 0.15 kPa (3.1 psf)

OBC Section 9.4.2.4 states residential attics may be designed for a total load of 0.5 kPa which represents the dead load <u>plus</u> the ceiling live load:

Bottom Chord of Roof Trusses	= 0.5 kPa (10.4 psf)
Garage Ceiling Joists	= 0.5 kPa (10.4 psf)

4.4 Floor Joists and Track

Steel framing members have a high strength to weight ratio. Individual members are lighter per unit length than traditional wood framing members. Due to the low self-weight per unit length and the strength of steel, steel joists of the same dimension as wood joists can span longer distances. By increasing the base thickness of the steel in a floor joist, the strength and span can be increased.

The direction in which the floor joists run and the decisions regarding the use of a single or continuous span are important considerations for framing. Floor joist orientation and span is normally the decision of the designer (architect, engineer, technologist). The framing contractor and framers should be familiar with the principles underlying the design of floor systems, so that they are aware of the impacts of any modifications which might be necessary during construction.

4.4.1 Span Direction

Joists can span between end walls (front to back), side walls (side to side), or between walls and intermediate supports. The floor joist orientation and length will always be shown on the building drawings. The design house for this course uses floor joists primarily oriented from side to side, with front to back joists supporting the kitchen and breakfast areas as shown in Figures 4.1 and 4.2.

The decision for orientation and span of floor joists is often a balance between economics, materials, and design. In a house the entire floor is divided into floor areas or sections. A floor section is any part of the floor bounded by foundation and/or intermediate underlying supports. The span orientation and length is usually aligned with the smallest dimension of that floor section in order to optimize load-carrying abilities of the floor, and minimize deflection and vibration.

The details (i.e. dimensions, materials, location, supporting points) of any intermediate supporting beams are normally specified by the designer. These support beams act to reduce the span length and the required depth and steel thickness of the steel floor joists. There will be trade-offs between clear span and floor joist depth, steel thickness, and cost. The choice of long spans between foundation walls and load bearing walls, or shorter spans over intermediate supports is normally a decision of the building owner and designer.

4.4.2 Single and Continuous Span Floor Joists

Single span joists span between two support points without any intermediate support(s). The prescriptive method contained in the *CSSBI Steel Framing for Part 9 Construction* provides a way for designers and framers to select only single span joists.

A **continuous span joist** is a single floor joist without cut or splice, that spans between two points with one or more intermediate supports. In general, a continuous span joist can be designed with less depth and may be thinner steel

for the same loading conditions as several single spans. This size reduction is due to a reduction in bending moment and deflection created by the intermediate supports along the joist. **Bending moment** is the structural term used to describe the bending forces in the member that give rise to stress. **Deflection** is the term used to describe how much the joist bends or sags due to loading. The steel thickness and depth must be designed adequately to resist these stresses and to prevent significant deflection or bending (i.e. bouncy floors).

Manufacturers can roll form joists to any length but highway transport restrictions limit the practical length of floor joists to about 45 feet (13.7 m).

4.4.3 Ground Floor Joist Size Selection

The required size and thickness of the floor joists may be determined using the CSSBI *Member Selection Tables*. Two different selection criteria are available for floor joists.

One selection criteria uses an **L/480 mid-span deflection limit**. This is the limit suggested by the National Association of Home Builders (NAHB) for vibration control and is widely accepted throughout North America. This deflection criteria implies a joist spanning 4800 mm would have a maximum allowable deflection of 10 mm at its mid-point. The services of a design professional however, would be required to verify the member selection. CSSBI *Member Selection Tables 2A-1* and *2A-2* are based on this criteria for selecting floor joist dimensions and thickness.

The second selection criteria was developed by the Advanced Technology Council (ATC) which permits a more liberal **mid-span deflection limit of L/360** but **a more stringent limit for vibration control.** This deflection criteria implies that a joist spanning 4800 mm would have a maximum allowable deflection of 13.3 mm at its mid-point. CSSBI *Member Selection Tables 2B-1* and *2B-2* are based on the ATC criteria. The Canadian Construction Materials Centre (CCMC) requirement adopted within the CSSBI *Steel Framing for Part 9 Construction* uses the ATC criteria and the services of a design professional are not required.

The following parameters have previously been established in this chapter:

Ground Floor Live Load =	1.9 kPa
Ground Floor Dead Load =	0.5 kPa
Second Floor Live Load =	1.4 kPa
Second Floor Dead Load =	0.45 kPa
Floor Joist Spacing =	16 in (400 mm) o/c

All ground floor load bearing exterior walls bear over the foundation and all ground floor load bearing partitions bear over a steel beam. Therefore there are no point loads on the ground floor joists and the CSSBI *Member Selection Tables* can apply. If a significant point load were present, professional engineering advice would be required.

4.4.3.1 Joists J1 and J2A

In Figure 4.1 it can be seen that the longest single span joists for the ground floor joists are joists J1 and J2A at 11' - 8" (3.56 m). These joists have one end bearing on the foundation wall and the other end bearing on a W150 x 22 steel beam. If the flange width of the steel beam is 6 in (152 mm), the **clear span** of these joists is 11' - 8" minus one-half the flange width (3 in) or 11' - 5" (3.48 m).

Using the following parameters:

- Live load = 1.9 kPa;
- Dead load = 0.5 kPa;
- Joist spacing = 400 mm o/c;
- Deflection limit = L/360 (ATC Criteria);
- Clear span = 3.48 m;

the maximum clear span can be determined for different joists using CSSBI *Member Selection Table 2B-1* for living quarters. The mass of these joists can also be determined using CSSBI *Member Selection Table 1B-1*. Table 4.1 below lists the joists that are capable of spanning the 3.48 m distance.

Table 4.1: Joist Sizes, Maximum Clear Span and Mass for J1, J2A

Joist Size Flange Width x Web Depth x Thickness (mm)	Maximum Allowable Span Length (m)	Mass (kg/m)
41 x 152 x 1.22	3.53	2.39
41 x 152 x 1.52	3.70	2.96
41 x 203 x 1.22	4.12	2.88
41 x 203 x 1.52	4.31	3.57
41 x 203 x 1.91	4.55	4.42
41 x 254 x 1.22	4.62	3.37
41 x 254 x 1.52	4.86	4.18
41 x 254 x 1.91	5.13	5.18

All of the joists will span 3.48 m. The 6 in (152 mm) deep joists, however, may not be practical to accommodate plumbing and other services. The 8 in (203 mm) joist with the lowest mass is chosen since it will likely be the lowest in cost. A 41 x 203 x 1.22 joist with a mass of 2.88 kg/m is selected for joists J1 and J2A.

4.4.3.2 Joists J2B - J9

The remainder of the ground floor joists J2B through J9 should also be 203 mm deep to maintain a level floor. However, because some joists span shorter distances it is possible that a thinner joist could be used. The CSSBI *Member Selection Table 2B-1* shows that a 41 x 203 x 0.84 joist has a maximum allowable clear span of 3.47 m. This thickness of steel would be adequate for joists J2B through J9. Construction of the floor is simplified and on-site errors reduced, if mixed joist sizes and thickness are avoided on any one floor. Therefore, all of the joists on the ground floor are selected as 41 x 203 x 1.22.

It should be noted that double joists are required under all interior partitions that run parallel to the floor joists.

4.4.4 Second Floor Joist Size Selection

A similar procedure is followed for selecting the second floor joists. It should be noted that none of the second floor partitions are load bearing. The weight of the interior partitions is included in the second floor dead load, and so the CSSBI *Member Selection Tables* may be used.

4.4.4.1 Joists J10 and J19

Figure 4.2 reveals that the joists with the greatest clear span are joists J10 and J19. Their clear span is 11' - 6 1/2" (3.52 m).

Using the following parameters:

- Live load = 1.4 kPa;
- Dead load = 0.45 kPa;
- Joist spacing = 400 mm o/c;
- Deflection limit = L/360 (ATC Criteria);
- Clear span = 3.52 m;

the maximum clear span can be determined for different joists using CSSBI *Member Selection Table 2B-2* for bedrooms. The mass of these joists can also be determined using CSSBI *Member Selection Table 1B-1*. Table 4.2 below lists the joists that are capable of spanning the 3.52 m distance.

Table 4.2: Joist Sizes, Maximum Clear Span and Mass for J10, J19

Joist Size Flange Width x Web Depth x Thickness (mm)	Maximum Allowable Span Length (m)	Mass (kg/m)
41 x 152 x 1.22	3.53	2.39
41 x 152 x 1.52	3.70	2.96
41 x 203 x 0.84	3.76	2.00
41 x 203 x 1.22	4.12	2.88
41 x 203 x 1.52	4.31	3.57
41 x 203 x 1.91	4.55	4.42
41 x 254 x 1.22	4.62	3.37
41 x 254 x 1.52	4.86	4.18
41 x 254 x 1.91	5.13	5.18

The 41 x 203 x 0.84 joist has the lowest mass at 2.00 kg/m and is the logical choice for joists J10 and J19.

4.4.4.2 Other Second Floor Single Span Joists

All of the joists on the second floor should have the same depth to maintain a level second floor. Since the 41 x 203 x 0.84 joist was chosen for J10 and J19, and it is the lightest of all joists with a 203 mm web depth, all second floor joists can be 41 x 203 x 0.84.

4.4.4.3 Second Floor Continuous Span Joists

Joists J15, J16, and J17 have been designed as continuous span joists to avoid additional short joist lengths. The longest span at 11' - 6 1/2" (3.52 m) is the same as J10 and J19. Since a continuous span is "stronger" than a single span, a 41 x 203 x 0.84 joist selected for J10 and J19 is satisfactory for J15, J16, and J17.

4.4.5 Final Floor Joist Sizing

For the ground floor a 41 x 203 x 1.22 joist size was determined. For the second floor a 41 x 203 x 0.84 joist was determined. In a single house project, it is wise to avoid small quantities of different member sizes and thicknesses to ensure availability and to minimise small quantity cost premiums. To simplify construction, all of the floor joists in the design house will be the same size. The largest joist size governs, therefore 41 x 203 x 1.22 joists are chosen for the entire ground floor and entire second floor.

If several houses were being framed at the same time, it would be more cost efficient to use 41 x 203 x 1.22 joists on the main floor and 41 x 203 x 0.84 joists on the second floor.

4.4.6 Header and Trimmer Joist Sizing

Header and trimmer joists are required to frame the stairway openings on the ground and second floors (H1, H2, H3, and T1). Based on the dimensions provided in Figures 4.1 and 4.2 the header and trimmer lengths are as follows:

H1	3' – 4"	(1.02 m)
H2	2' – 11"	(0.89 m)
H3	8' – 8"	(2.64 m)
T1	8' – 8"	(2.64 m)

Header and trimmer joist selection is done using the CSSBI *Member Selection Tables 3A* through *3D*. The same two selection criteria exists as with floor joists: the NAHB Deflection Limit; and the ATC Vibration Limit.

4.4.6.1 Header Joists

The CSSBI *Member Selection Tables* apply to header joists and track of the same depth and thickness as the floor joists. The decision was previously made to use 41 x 203 x 1.22 floor joists throughout the entire home. One

enters CSSBI *Member Selection Table 3B* with a 41 x 203 x 1.22 floor joist and 400 mm joist spacing.

The table shows that a header built up from two tracks plus one joist has a maximum allowable length of 3.03 m which satisfies the requirements of all headers. Therefore, this header type will be used for headers H1, H2 and H3. Note that thinner steel and/or a different header configuration could possibly be used for H1 and H2, but again to simplify construction on a single home, the more robust header design is used.

4.4.6.2 Trimmer Joists

The CSSBI *Member Selection Tables* for trimmer joists are divided into two types of openings. Type A opening uses one header and a trimmer. Opening Type B requires two headers and a trimmer joist. The stairway opening in the design house resembles a Type A Opening so CSSBI *Tables 3C-1* (NAHB Deflection Limit) or *3D-1* (ATC Vibration Limit) would be used.

Section 5.4.1 of the CSSBI *Installation Manual* states that rim joists are normally 0.048 inch (1.22 mm) thick material. Therefore, any track section would initially be sized with 1.22 mm thickness. The trimmer joists and track are normally the same web depth and thickness as the floor joists (41 x 203 x 1.22). CSSBI *Member Selection Table 3D-1* shows that a trimmer built up from two joists (41 x 203 x 1.22) plus one track (30 x 203 x 1.22) has a maximum allowable length of 3.05 m. Therefore, this trimmer design will be used for T1.

Header and trimmer joist details are shown on Figure 4.5A and may also be found in CSSBI *Installation Manual Section 5.4.7.*

4.4.7 Web Stiffeners, Bracing, and Sheathing

The CSSBI *Member Selection Tables* for floor joists requires stiffeners to be placed at the end of each single span joist and over intermediate supports for continuous span joists.

The unsupported length of the bottom flange of a floor joist cannot exceed 2400 mm. Therefore, one line of flat strap bracing must be placed on the bottom flange of all joists that have clear spans between 7' – 10 1/2" (2.4 m) and 15' – 9" (4.8 m). Two lines of flat strap bracing must be used for clear spans between 15' – 9" (4.8 m) and 23' – 7 1/2" (7.2 m). Solid blocking must be installed between joists at maximum spacing of 8 ft (2.4 m) and at the termination points of the flat strap bracing in order to properly anchor it. The blocking can be a section of joist track which has been measured and cut to fit between the joists and fastened as shown in CSSBI *Installation Manual Figure 5.4.5c.*

The web stiffener and flat strap bracing details selected for the design house are seen in Figure 4.5A, and are taken from CSSBI *Installation Manual Section 5.4.5.*

The floor sheathing (subfloor) must be sufficiently thick to support loads over the span between floor joists. *OBC Table 9.23.14.5A* provides options for the structure of the subfloor. In the design house the joists are spaced at 16 in (400 mm) o/c and 5/8 in (15.5 mm) plywood or OSB, O-2 grade subflooring is selected.

4.5 Wall Stud and Track

4.5.1 Selection Criteria and Loads

When sizing wall studs, it is first necessary to determine if a wall is non-load bearing, wind bearing or load bearing. It is also important to follow the path of loads from the roof, down through the walls to the foundation.

In the design house it can be seen in Figure 4.3 that the second floor west wall supports one end of the roof trusses. It is a load bearing wall. The west wall must resist the snow, ice and rain live load on the roof trusses as well as the wind pressure. The second floor west wall bears on the west ground floor wall of the house. The loads in the second floor west wall are transmitted to the ground floor west wall below. In addition, the south end of the ground floor west wall supports one end of the J10 joists on the second floor and resists wind load on the side of the house. In fact, the wall studs in the southerly two-thirds of the ground floor west wall are the most heavily loaded studs in the house. They must resist the following loads:

- Snow, ice, and rain load from the roof trusses;
- Dead load from the roof trusses;
- Dead load from the second floor west wall;
- Live load of the second floor;
- Dead load from the second floor;
- Wind pressure.

4.5.2 Ground Floor Studs

The sizing of the ground floor studs begins with a determination of which wall is carrying the greatest combination of live and dead load.

4.5.2.1 West Wall

The required size and thickness of wall studs for the south end of the ground floor west wall can be determined using the CSSBI *Member Selection Tables 5A* through *5M*. The following data is required to use the tables:

- **Floor to ceiling wall height:**
  The distance from the top of the ground floor to the top of the second floor is 9' – 9" (2972 mm). After subtracting the depth of the second floor joists 8 in (203 mm), the second floor sub-floor 5/8 in (16 mm) and the ceiling drywall 3/8 in (10 mm), the floor to ceiling height of the ground floor wall is 9'-0" (2743 mm) or 2.74 m.
- **Tributary width of J10 joists on the second floor:**
  The floor width supported by the J10 joists is seen on Figure 4.2 as being 11' – 6 1/2" (3.52 m). The tributary width supported by the west wall is one-half this width 5' – 9 1/4" (1.76m).

- **Tributary width of the roof trusses:**
  From Figure 4.3 the roof trusses have an overall width of 29' – 3 3/4" (8.93 m) plus a 15 in (0.38 m) overhang The tributary width supported by the west wall is one-half this width or 15' - 3 3/8" (4.66m).
- **Wall stud spacing is 400 mm o/c:**
- **Snow, ice and rain load of 1.04 kPa:**
- **Maximum hourly wind pressure q (1/30) of 0.43 kPa.**

In order to use the CSSBI *Member Selection Tables*, some of the above values must be rounded up to the values shown in *Tables 5A* through *5M*. For an exterior axial load bearing stud wall, the snow load is rounded up to 1.5 kPa, the floor to ceiling height is 9' – 1" (2.77 m), wind pressure q (1/30) is 0.5 and a clear span truss is selected.

CSSBI *Member Selection Table 5F-2* fits all these criteria. Entering *Table 5F-2* with:

- a roof snow load of 1.5 kPa;
- a floor joist tributary width of 3.8 m;
- a roof truss tributary width (ridge to eaves) of 5.4 m;
- a wall stud spacing of 400 mm;
- one supported floor;

it is seen that studs A2 (41 x 92 x 1.12) and B1 (41 x 152 x 0.84) are possible stud sections for this house.

To simplify construction, the ends of the wall studs will not be stiffened. As members subject to wind loading, they have a web crippling type end connection and must be checked for web crippling. Use the CSSBI *Member Selection Table 4-1* to check the allowable maximum single span height of the proposed wind bearing studs.

Entering CSSBI *Member Selection Table 4-1* with q (1/30) = 0.5 kPa and a wall stud spacing of 400mm, it is determined that the maximum height for the A2 stud is 3.26 m and the maximum height for the B1 stud is 2.57 m. Since the height of the ground floor wall is 2.74m, the B1 stud is eliminated and the A2 stud (41 x 92 x 1.12) is selected.

4.5.2.2 Other Walls

The preceding process can be followed to determine the required size and thickness of the remainder of the wall studs on the ground floor. The partitions on the ground floor are a mixture of load bearing and non-load bearing walls. However, to avoid complexity and errors, all partition studs on the ground floor are constructed as load bearing walls.

4.5.3 Second Floor Wall Studs

4.5.3.1 West Wall

The studs in the west wall on the second floor resist the greatest loads of that floor. The floor-to-ceiling height is 8' – 0" minus 3/8" ceiling drywall or 7' – 11 5/8" (2.43 m). There is no overlying floor so therefore no tributary floor width. The tributary roof width is 4.66 m and the stud spacing is 400 mm.

CSSBI *Member Selection Table 5F-1* fits all these criteria. Entering *Table 5F-1* with:

- a roof snow load of 1.5 kPa;
- a roof truss tributary width (ridge to eaves) of 5.4 m;
- a wall stud spacing of 400 mm;
- no supported floor;

it is determined that studs A1 (41 x 92 x 0.84) and B1 (41 x 152 x 0.84) are possible selections.

Entering CSSBI *Member Selection Table 4-1* for wind bearing wall studs, it is determined that the maximum height for the A1 stud is 2.99 m and the maximum height for the B1 stud is 2.57 m. Since the floor to ceiling height on the second floor is 2.43 m, either the A1 or B1 studs may be used. The A1 stud weighs 1.27 kg/m and the B1 stud weighs 1.67 kg/m as per CSSBI *Member Selection Table 1B-1*. Therefore, it is logical to choose the lighter A1 stud (41 x 92 x 0.84) for the second floor west wall.

4.5.3.2 North Wall

The studs in the north wall on the second floor resist wind pressure only and are classified as wind bearing studs. The ends of the studs will be unstiffened and they are susceptible to web crippling so CSSBI *Member Selection Table 4-1* applies. Their length is 7' - 8 3/4" (2.36 m), the stud spacing is 400mm and the q (1/30) wind pressure is rounded up to 0.5 kPa. CSSBI *Member Selection Table 4-1* shows that any stud in the table may be used since they all have a maximum allowable height greater than 2.36m. It is logical to select the lightest stud 41 x 92 x 0.84 which has a maximum allowable height of 2.99 m.

4.5.3.3 Partition Walls

The partitions on the second floor do not carry any live loads. Hence, non-load bearing studs are selected for all of these partitions.

4.5.4 Final Wall Stud Sizing

The comments made previously regarding construction complexity, material availability, and cost associated with using small quantities of several sizes and thickness of floor joists also apply to wall studs. Therefore for this single house project, the wall studs in the exterior wall on both floors and the partitions on the ground floors are selected as 41 x 92 x 1.12.

If several houses were built at the same time, it would be logical to use 41 x 92 x 1.12 studs for the ground floor exterior walls and partitions, 41 x 92 x 0.84 studs for the second floor exterior walls, and non-load bearing studs for the second floor partitions.

Since as a minimum, track sections should have the same thickness as the wall studs, the track section chosen for all walls is 30 x 92 x 1.12.

4.6 Wall Openings

The design house has numerous window, door, and wall openings that will require lintels and sills. If one refers to the house plans in Figures 4.1, 4.2 and 4.3 is can be seen that a total of twenty-five lintels must be designed, constructed and installed. A total of nineteen windows will need window sills. Three door and three wall openings require lintels. The following summarizes the lintel requirements for the house:

- 3 basement lintels (all windows)
- 13 ground floor lintels
  - 7 exterior wall window openings
  - 1 exterior wall patio door
  - 2 exterior wall doors
  - 3 interior load bearing partition wall openings
- 9 second floor lintels (all windows)

The lintels are supported on a king-jack stud assembly which will be constructed from the same material as the wall studs (41 x 92 x 1.12). Because the lintels rest on jack studs having a 1 - 5/8 in (41 mm) flange, the centre-of-bearing to centre-of-bearing length for the lintels is taken as the opening width plus 1 - 5/8 in (41 mm).

4.6.1 Wall Opening Dimensions

The architect has specified the opening sizes and the location of the openings from the floor and ceiling as seen in Table 4.3.

Table 4.3: Dimensions for Wall Openings

Lintel	Opening Size width x height (inches)	Top of Floor to Top of Opening (feet – inches)	Lintel Bearing Length (metre)	Stud Length to Head Sill		Stud Length to Window Sill	
				(in)	(m)	(in)	(m)
L1	84 x 60 Window	6' – 6"	2.18	22-3/8	0.57	18	0.46
L2	47 x 72 Window	6' – 6"	1.24	22-3/8	0.57	6	0.15
L3	47 x 37 Window	6' – 6"	1.24	22-3/8	0.57	41	1.04
L4	60 x 90 Patio Doors	7' – 6"	1.57	--	--	--	--
L5	22 x 72 Window	7' – 6"	0.60	10-3/8	0.26	6	0.15
L6	22 x 72 Window	7' – 6"	0.60	10-3/8	0.26	6	0.15
L7	22 x 72 Window	7' – 6"	0.60	10-3/8	0.26	6	0.15
L8	35 x 43 Window	6' – 6"	0.93	22-3/8	0.57	35	0.89
L9	36 x 80 Door	6' – 8"	0.96	--	--	--	--
L10	48 x 80 Door	6' – 8"	1.26	--	--	--	--
L11	36 x 80 Opening	6' – 8"	0.96	--	--	--	--
L12	36 x 80 Opening	6' – 8"	0.96	--	--	--	--
L13	48 x 80 Opening	6' – 8"	1.26	--	--	--	--
L14	47 x 43 Window	6' – 6"	1.24	10	0.25	35	0.89
L15	47 x 43 Window	6' – 6"	1.24	10	0.25	35	0.89
L16	47 x 43 Window	6' – 6"	1.24	10	0.25	35	0.89
L17	29 x 31 Window	6' – 6"	0.78	10	0.25	47	1.19
L18	29 x 31 Window	6' – 6"	0.78	10	0.25	47	1.19
L19	26 x 36 Window	6' – 6"	0.70	10	0.25	42	1.07
L20	26 x 48 Window	6' – 6"	0.70	10	0.25	30	0.76
L21	48 x 48 Window	6' – 6"	1.26	10	0.25	30	0.76
L22	36 x 43 Window	6' – 6"	0.96	10	0.25	35	0.89

4.6.2 Lintel Type and Sizing

Lintel sizes and thicknesses are selected using the CSSBI *Member Selection Tables*. Three types of lintels are described in the CSSBI publication:

- Lintel Type L1 — 2 – 41 x 203 x 1.22 joists
- Lintel Type L2 — 2 – 41 x 203 x 1.52 joists
- Lintel Type L3 — 2 – 41 x 203 x 1.91 joists

CSSBI *Member Selection Table 6A* provides maximum allowable rough opening widths based on a variety of king-jack assemblies. *Table 6B* gives window sill/head maximum allowable spans based on factors including wind pressure, stud length, size and thickness, and sill/head configuration. *Tables 6C* and *6D* give maximum allowable lintel spans for the three lintel types in interior and exterior walls.

The lintel detail selected for the design house is shown in Figure 4.5B as having the lintel fastened into the top track. Therefore the lintel is not required to resist wind pressure.

4.6.2.1 Lintels L3 and L4

Wall lintels L3 and L4 on the ground floor west wall will carry the largest loads and must function under the following conditions:

- floor to ceiling height is 2.74 m,
- the roof snow load is 1.04 kPa,
- the tributary floor width is 1.76 m,
- and the tributary width of the roof trusses is 4.66 m.

The only table for clear span truss loading for lintels is *CSSBI Member Selection Table 6D-1* with a maximum floor to ceiling height of 4.293 m. The use of this table will result in a conservative design. Entering the Table with the following parameters:

- roof snow load of 1.5 kPa,
- floor joist tributary width of 3.8 m,
- roof truss tributary width of 5.4 m,
- and one supported floor,

the maximum spans for Lintel Types L1, L2 and L3 are obtained:

- Lintel Type L1 — Max span = 1.03 m
- Lintel Type L2 — Max span = 1.85 m
- Lintel Type L3 — Max span = 2.12 m

The maximum spans in this case are for unperforated joists.

In the design house lintels L3 and L4 have spans of 1.24 m and 1.57 m (see Table 4.3) respectively. A Lintel Type L2 consisting of 2 - 41 x 203 x 1.52 joists is required for lintels L3 and L4.

4.6.2.2 Lintel L1

Lintel L1 on the ground floor, above the large front window, is only required to support the dead load of the second floor wall which bears on it and must span 2.18 m. A conservative approach would be to treat it as an interior load bearing wall and enter CSSBI *Member Selection Table 6C-1* with the following parameters:

- no roof or ceiling supported,
- 3.8m of ceiling and floor joist tributary width,
- one supported floor.

Lintel Type L2 (2 - 41 x 203 x 1.52 joists) can span 2.86m (perforated or unperforated joists) and is satisfactory for lintel L1. This lintel will require a special king-jack stud configuration due to the distance spanned by the lintel (see Section 4.6.3.2)

4.6.2.3 Other Ground Floor and Second Floor Lintels

Lintel Type L2 (2 - 41 x 203 x 1.52 unperforated joists) is chosen for the rest of the lintels in the design house. Under the heaviest loading (the south end of the west wall), Lintel Type L2 has a maximum allowable span of 1.85m as determined above in Section 4.6.2.1. Therefore, it is satisfactory for lintels L2 through L22 in the design house, all of which have a shorter span. Also, it was determined in Section 4.6.2.2 that Lintel Type L2 will be satisfactory for lintel L1.

4.6.2.4 Basement Window Openings

Basement wall window openings have included reinforced steel window frames that act as the lintel. The manufacturer of these window frames should be consulted for the correct size.

4.6.3 Wall Opening Framing

4.6.3.1 Head Sills and Window Sills

The length of the studs framing into the head sills and window sills are shown in Table 4.3. To avoid construction complexity and confusion, all head sills and window sills will be made from stud and track material of the same size and thickness.

Table 4.3 shows that the maximum stud length for a window sill or a head sill is 1190 mm. CSSBI *Member Selection Table 6B* shows Window Sill/Head Maximum Span. Enter *Table 6B* with the following conservative design parameters:

- q (1/30) of 0.5 kPa,
- a stud length of 1200 mm,
- stud size of 41 x 92 x 1.12,

and one can see that a single track sill/head has a maximum span of 1.77 m. Span is defined here as the rough opening width.

The rough opening width for lintels L2 to L22 is less than the 1.77 m maximum allowed for these conditions. Therefore a single track for the window sill and head sill, the same depth and thickness as the house stud, may be used for lintels L2 to L22.

Lintel L1 has a head sill stud length of 0.57m and a window sill stud length of 0.46m. Enter the table with the following conservative design parameters:

- q (1/30) of 0.5 kPa,
- a stud length of 750 mm,
- stud size of 41 x 92 x 1.12,

and one can see that a sill of one stud plus two tracks can span 2.95m. Since the rough opening width of lintel L1 is 2.13 m, the head sill and window sill of L1 will be constructed of one stud (41 x 92 x 1.12) and two tracks (30 x 92 x 1.12).

4.6.3.2 Built-Up Jamb Configurations

The CSSBI *Member Selection Table 6A* provides maximum allowable rough opening widths for different types of built-up jambs. The table shows that with a 400 mm stud spacing, a built-up jamb consisting of one jack stud and one king stud is satisfactory for a rough opening width up to 1.05 m. A built-up jamb consisting of one jack stud and two king studs is satisfactory for a rough opening width up to 1.78m.

Lintels L2 to L22 have rough opening widths less than 1.78 m. Some are less than 1.05 m, but to avoid complexity, all built-up jambs for these openings will consist of one jack stud and two king studs. The CSSBI publication states that

all jack studs, king studs and track sections match the size and thickness of the wall studs (41 x 92 x 1.12 stud, 30 x 92 x 1.12 track).

Lintel L1 has a rough opening width of 84 in (2.13 m). The built-up jamb configuration that will satisfy this span consists of:

- King stud – two studs (41 x 92 x 1.12) and one track section (30 x 92 x 1.12)
- Jack stud – one stud (41 x 92 x 1.12) and one track section (30 x 92 x 1.12)

4.7 Wall Bracing

It has been determined that the ground floor exterior walls require four diagonal flat strap braces per wall and the second floor exterior walls require two diagonal flat strap braces per wall. Section 6.3.3 of the *CSSBI Installation Manual* states that diagonal bracing must be located at each wall end and the angle to the horizontal must not exceed 60°. The diagonal bracing shall be made from 3 x 0.036 in (75 x 0.91 mm) steel.

The ground floor wall has an out-to-out height of 9' – 0 3/8" (2752 mm) as measured from the bottom track to the top track. The second floor wall has an out-to-out height of 8' – 0" (2438 mm). If the diagonal bracing is designed to cross four openings between wall studs as shown in Figure 4.5B, the horizontal distance will be 64 in (1625 mm). The angle to the horizontal on the ground floor bracing can be calculated as 59° and on the second floor 56°.

Horizontal wind and earthquake loads can be exerted on a wall from either direction parallel to the wall. Diagonal bracing must withstand loads from each direction, hence the "X" application shown in Figure 4.5B. The connection details selected for the bracing are also shown in Fig. 4.5B. The location of each X-brace is shown on Figures 4.2 and 4.3. Only two X-braces are shown for the ground floor east wall because the garage walls are adequately braced with sheathing.

4.8 Roof Framing Members

The roof over the main part of the design example is framed with trusses. A design professional must be consulted to obtain the necessary design for the roof trusses. For instructional purposes, rafter framing is discussed for the garage roof.

The primary differences between steel and wood rafter framing involve the ridge detail and the top track attachment detail. Steel rafters rest on the outside edge of the top track without a "bird's mouth".

4.8.1 Garage Roof Rafters

The selection of roof rafter LSF members is not included in the CSSBI *Steel Framing for Part 9 Construction* and is beyond the scope of this course. As mentioned, a design professional should determine the member sizes. However for the interested student, the method for determining loads needed for the rafter design is presented below.

The *OBC* requires that the roof rafters be able to resist all the following load combinations:

1. 1.25 x (dead load) + 1.50 x (snow, ice and rain live load).
2. 1.25 x (dead load) + (0.70 x 1.50) x (snow, ice and rain live load) + (0.70 x 1.50) x (wind pressure).
3. 0.85 x (dead load) – 1.50 x (wind suction or uplift).

In Section 4.3 of this chapter the garage rafter loads were determined to be:

- dead load 0.15 kPa,
- snow, ice and rain live load 0.994 kPa,
- q (1/30) wind pressure 0.43 kPa.

The wind pressure and suction are determined using the *Commentary to the NBCC.*

The garage has a significant door opening which can be relied on to be closed in storms. According to *NBCC Commentary Clause 37* it is a Category 2 building, and must be designed for a C_{pi} from 0.7 to –0.7. C_e is 1.0.

For the garage:

- $C_{pi}\,C_e =$ +0.7 for pressure
- $C_{pi}\,C_e =$ -0.7 for suction or uplift.

The external pressure coefficients must be added to the above internal pressure coefficients to determine the total effect of the wind on the roof. The

garage resembles the building in *Figure B-7* of the *NBCC Commentary*. The garage roof slope is 9:12 (36.9°). The length of the garage is about 6 m and the entire roof is treated as an end zone. Therefore, roof surfaces 2E and 3E are used to determine the pressure coefficients.

When the wind is perpendicular to the ridge, for a roof slope between 30 and 45°, C_pC_g is 0.6 on surface 2E and –1.0 on surface 3E. When the wind is parallel to the ridge, $C_p C_g$ is –2.0 for surface 2E and –1.0 for surface 3E. For the garage roof, the maximum external pressure coefficients are therefore 0.6 (downward) and –2.0 (uplift).

Therefore the total pressure coefficients are:

- $C_pC_g = 0.7 + 0.6 = 1.3$ for downward pressure
- $C_pC_g = -0.7 - 2.0 = -2.7$ for uplift.

OBC Section 4.1.8.1 states that the external pressure or suction on a building is:

$q\ (C_pC_gC_e)$.

The garage is about 17' high. C_e is determined to be 0.9 from *OBC* Table 4.1.8.1.

The **design pressure** on the garage roof is:

(0.43 kPa) (1.3) (0.9) = 0.50 kPa.

The **design uplift** on the garage roof is:

(0.43 kPa) (-2.7) (0.9) = 1.05 kPa.

The three load combinations can now be determined:

1. 1.25 x (dead load) + 1.50 x (snow, ice and rain live load)
   = 1.25 (0.15 kPa) + 1.50 (0.994 kPa)
   = **1.68 kPa**
2. 1.25 x (dead load) + (0.70 x 1.50) x (snow, ice and rain live load)
   + (0.70 x 1.50) x (wind pressure)
   = 1.25 (0.15 kPa) + (0.70) (1.50) (0.994 kPa)
   + (0.70) (1.50) (0.50 kPa)
   = **1.76 kPa**
3. 0.85 x (dead load) – 1.50 x (wind suction or uplift)
   = 0.85 x (0.15 kPa) – 1.50 x (1.05 kPa)
   = **-1.45 kPa (uplift)**

Design condition #2 exerts the most force on the roof (1.76 kPa).

A design engineer has used the above loading to analyze and select the following LSF members for the garage rafters:

- 41 x 254 x 1.52 (maximum span 6.07m)
- 41 x 254 x 1.91 (maximum span 6.56m)

The lighter member (41 x 254 x 1.52) is chosen for the roof rafters.

The ridge member 41 x 254 x 1.52 will be made from the same material as the roof rafters nested inside a 30 x 254 x 1.52 track section.

4.8.2 Garage Ceiling Joists

Garage ceiling joists keep the walls from being pushed out by the garage roof rafters.

The live load plus dead load on the garage ceiling joists has been shown as 0.5 kPa. The clear span of the garage ceiling joists is 18' – 4" (5.49 m). *CSSBI Member Selection Table 2C-1* is based on a live load and dead load totalling 0.8 kPa and may be used to select the ceiling joists.

If the garage ceiling joists are chosen to be the same size and thickness as the floor joists (41 x 203 x 1.22), and are spaced at 600 mm o/c, CSSBI *Member Selection Table 2C-1* shows a maximum allowable span of 6.20 m. Since the maximum span exceeds the actual span of 5.64 m, 41 x 203 x 1.22 joists may be used for the garage ceiling.

CSSBI *Table 2C-1 Note #7* requires flat strap bracing on the top flanges of the ceiling joists at intervals of 1200 mm or less. Four rows of bracing at intervals of 1098mm will be used. Sheathing is required to brace the bottom flanges of the garage ceiling joists.

4.9 Summary of Members

The following list summarizes the decisions made regarding floor joists, headers and trimmers, wall studs, lintels, window sills, head sills, king-jack assemblies, etc. It will be used later in Chapter 6 of this manual to develop a cut-list for ordering LSF materials.

Ground & Second Floor Joists:	41 x 203 x 1.22
Ground & Second Floor Rim joists:	30 x 203 x 1.22
Ground & Second Floor Joist Bridging:	38 x 0.84
Ground & Second Floor Joist Blocking:	41 x 152 x 1.22
Header Joists H1, H2 & H3:	Built-up from two tracks: 30 x 203 x 1.22 and one joist: 41 x 203 x 1.22
Trimmer Joist T1:	Built-up from one track: 30 x 203 x 1.22 and two joists: 41 x 203 x 1.22
Subflooring:	15.5mm plywood or OSB, 0-2 grade
Ground & Second Floor Load Bearing Wall Studs:	41 x 92 x 1.12
Ground & Second Floor Load Bearing Wall Tracks:	30 x 92 x 1.12
Lintels L1 to L22:	Built-up from two joists: 41 x 203 x 1.52
Head & Sill for Lintel L1:	Built-up from one stud: 41 x 92 x 1.12 and two tracks: 30 x 92 x 1.12
Head & Sill for Lintels L2, L3, L5 to L8, L9, L19, & L14-L22:	One track: 30 x 92 x 1.12
Jambs for Lintels L2-L22:	Built-up from one jack stud: 41 x 92 x 1.12 and two king studs: 41 x 92 x 1.12
Jambs for Lintel L1:	King stud – two studs: 41 x 92 x 1.12 and one track section: 30 x 92 x 1.12 Jack stud – one stud: 41 x 92 x 1.12 and one track section: 30 x 92 x 1.12
Wall Stud Bracing:	75 x 0.91
All Ground Floor Wall Studs:	41 x 92 x 1.12
Second Floor Wall Studs:	41 x 92 x .84
Garage Ceiling Joists:	41 x 203 x 1.22
Garage Ceiling Joist Bridging:	38 x 0.84

Garage Ridge Member:	Built-up from one joist: 41 x 254 x 1.52 and one track: 30 x 254 x 1.52
Garage Roof Rafters:	41 x 254 x 1.52

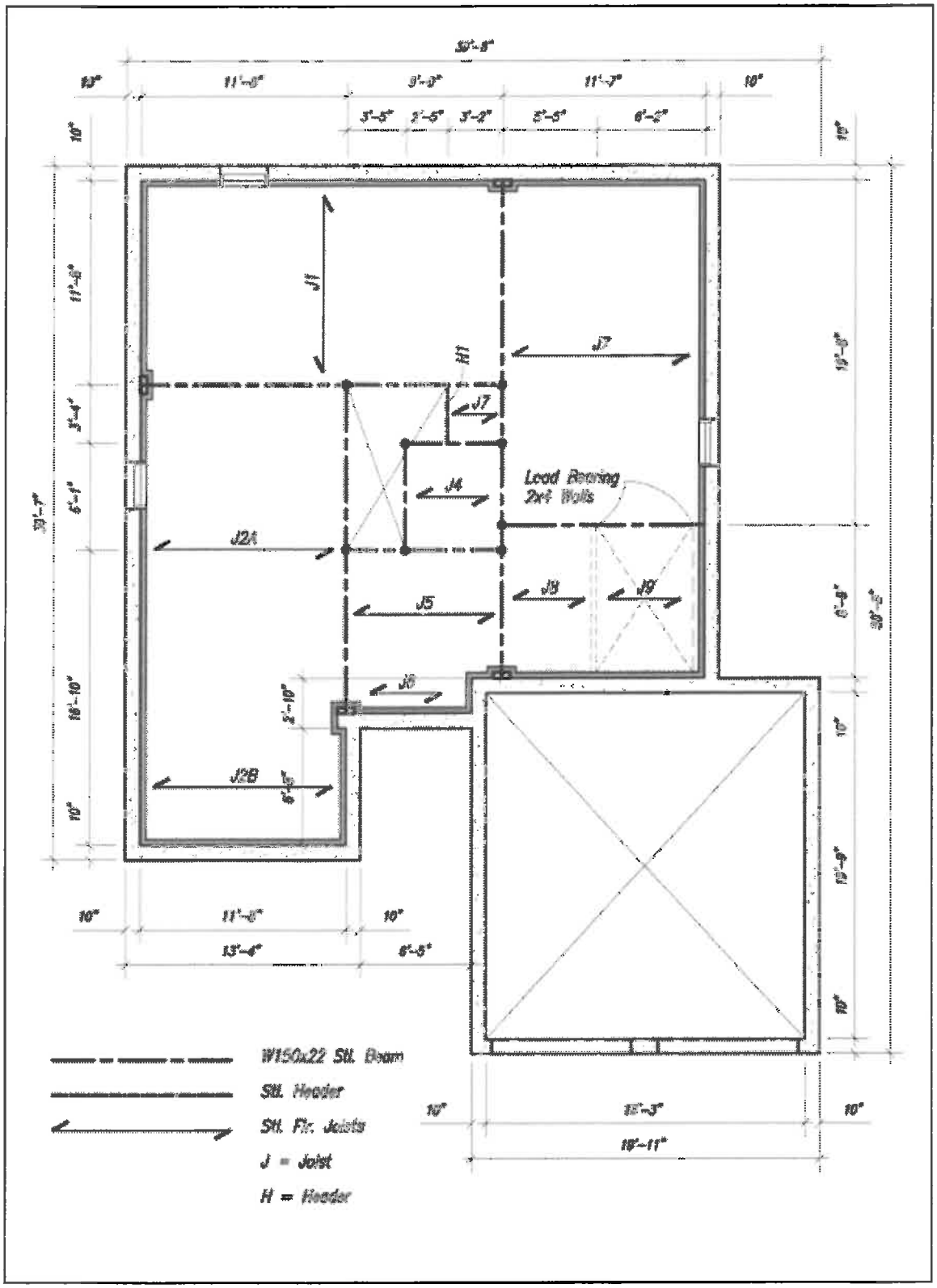

FIGURE 4.1 BASEMENT AND GROUND FLOOR FRAMING PLAN

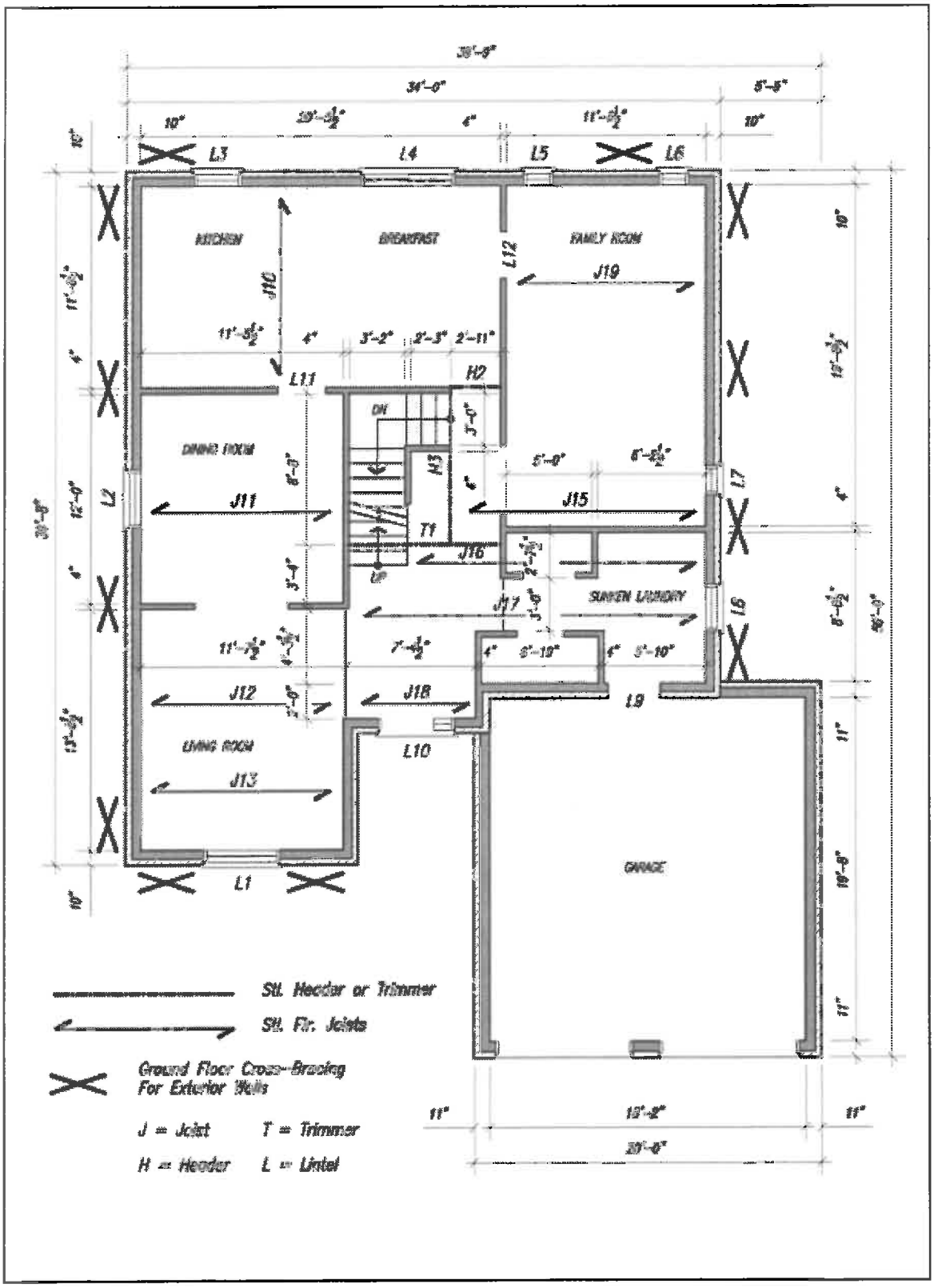

FIGURE 4.2 GROUND FLOOR AND SECOND FLOOR FRAMING PLAN

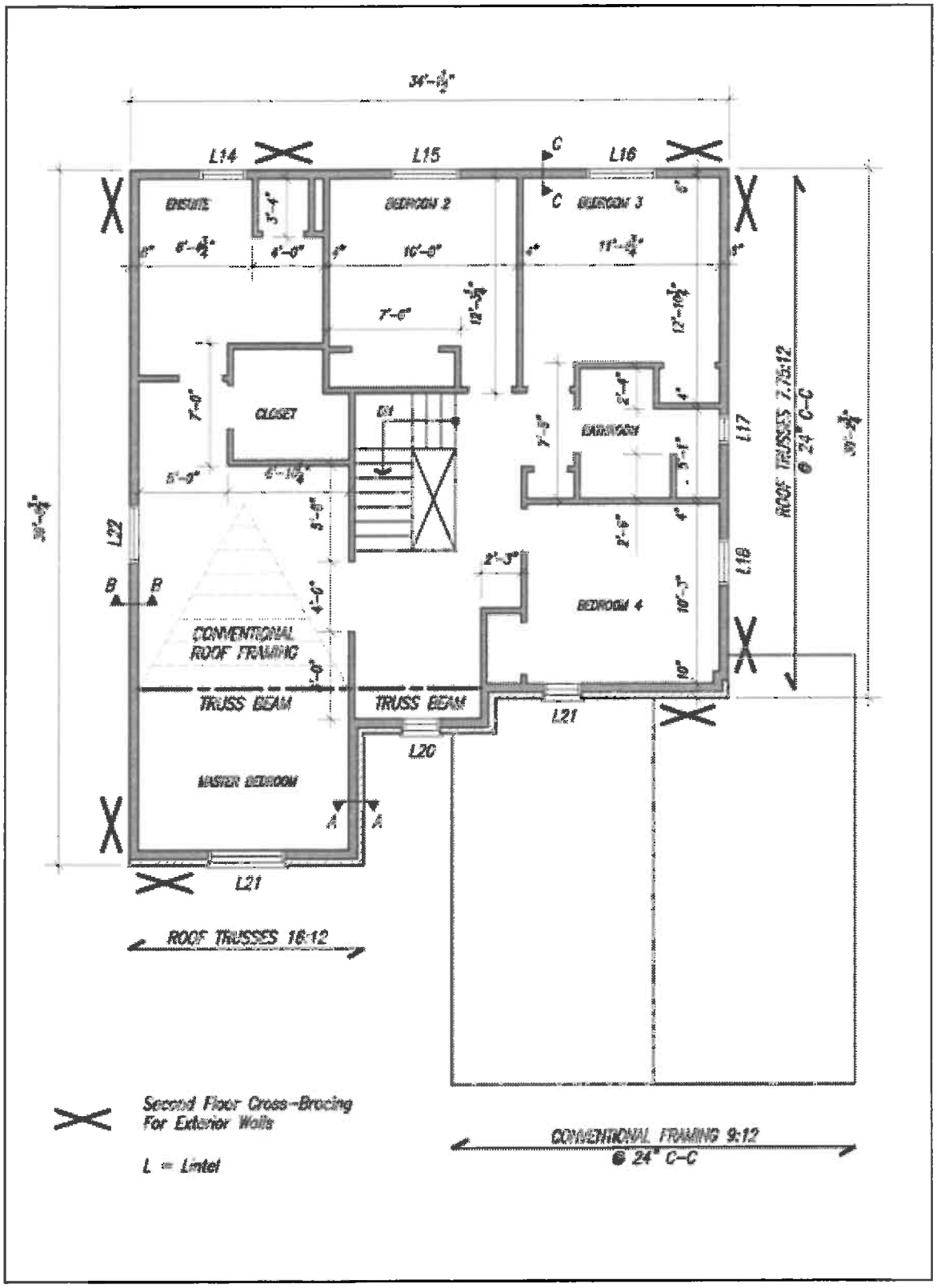

FIGURE 4.3 SECOND FLOOR AND ROOF FRAMING PLAN

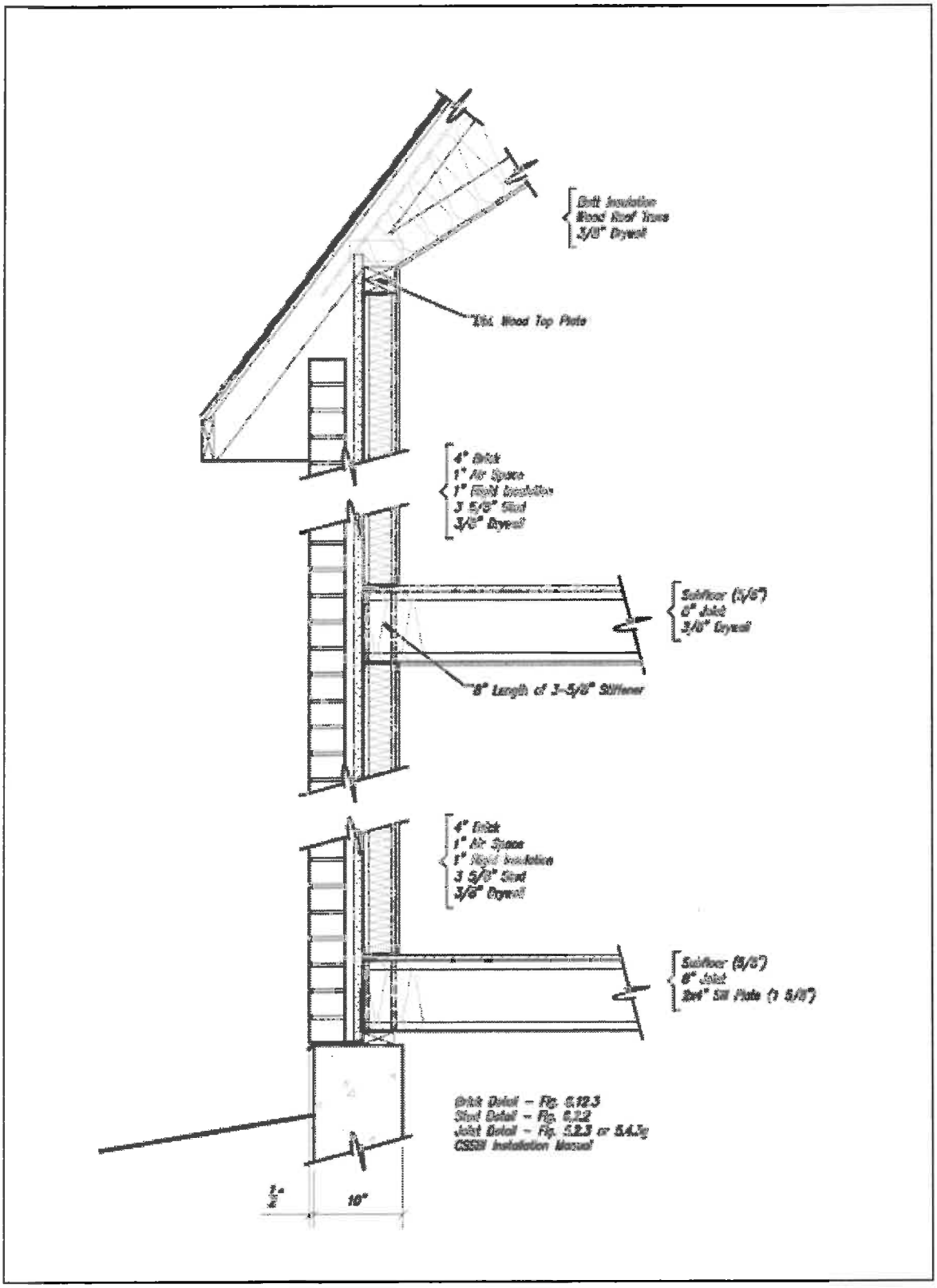

FIGURE 4.4A WALL SECTION

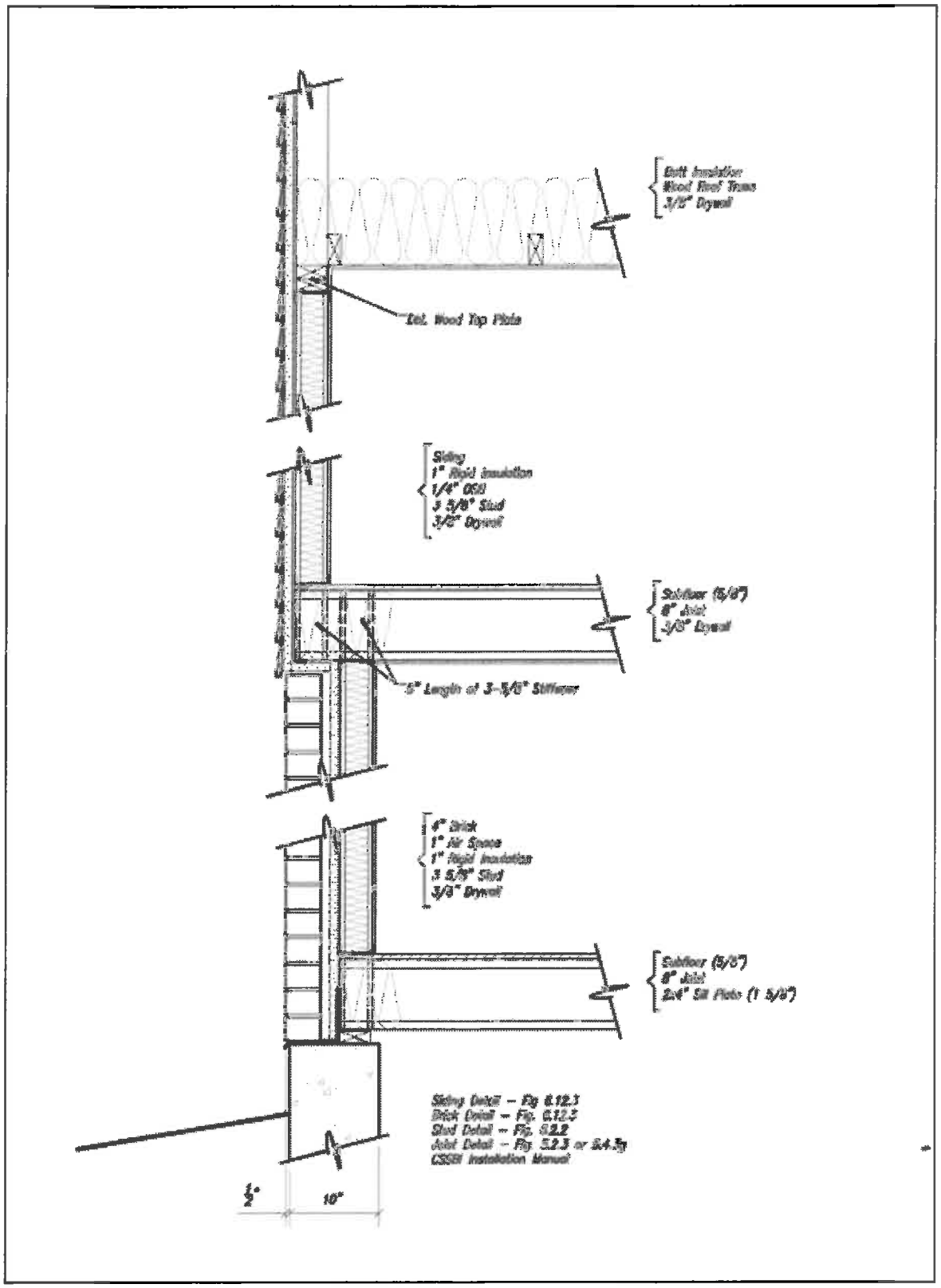

FIGURE 4.4B WALL SECTION

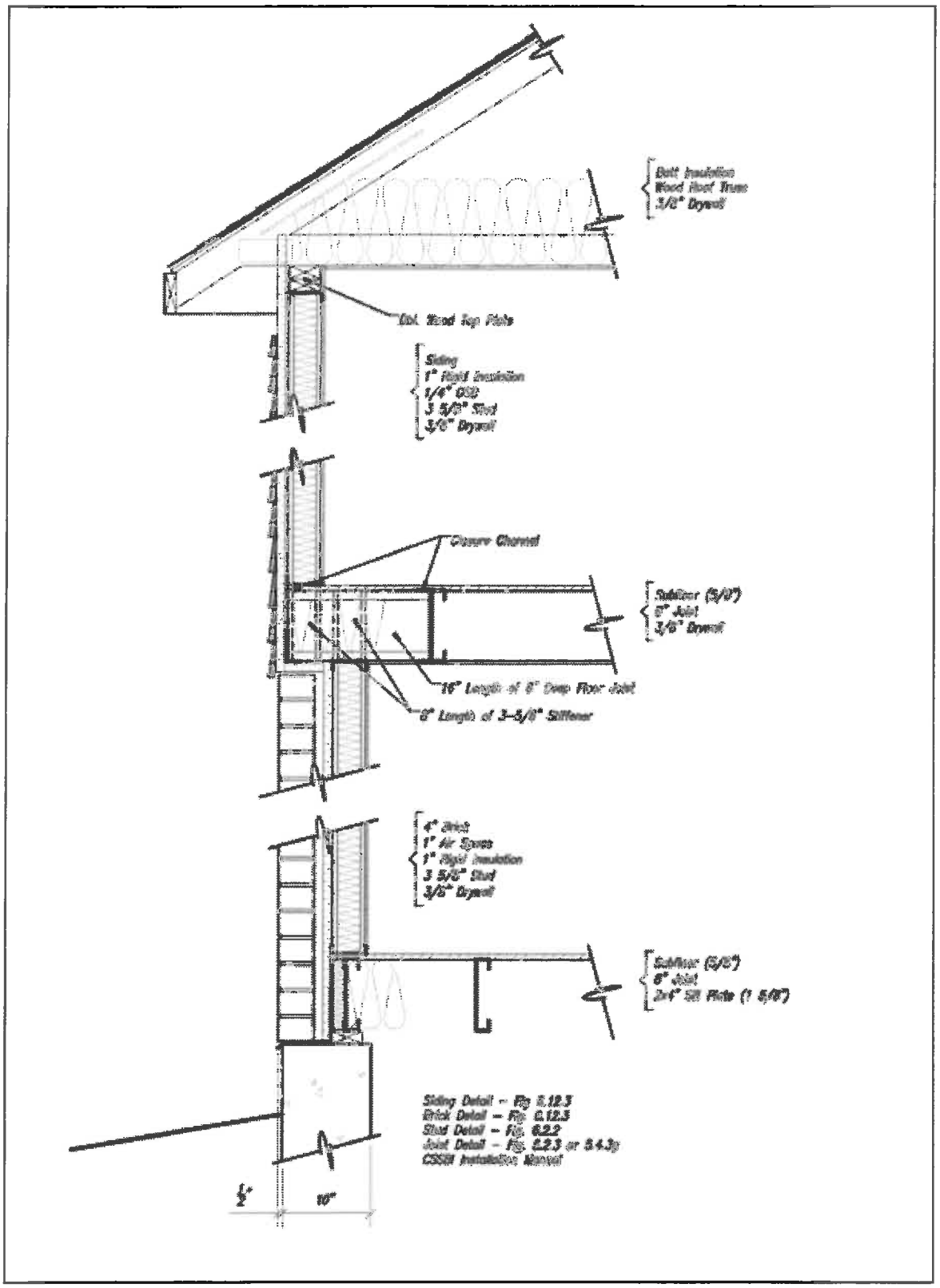

FIGURE 4.4C WALL SECTION

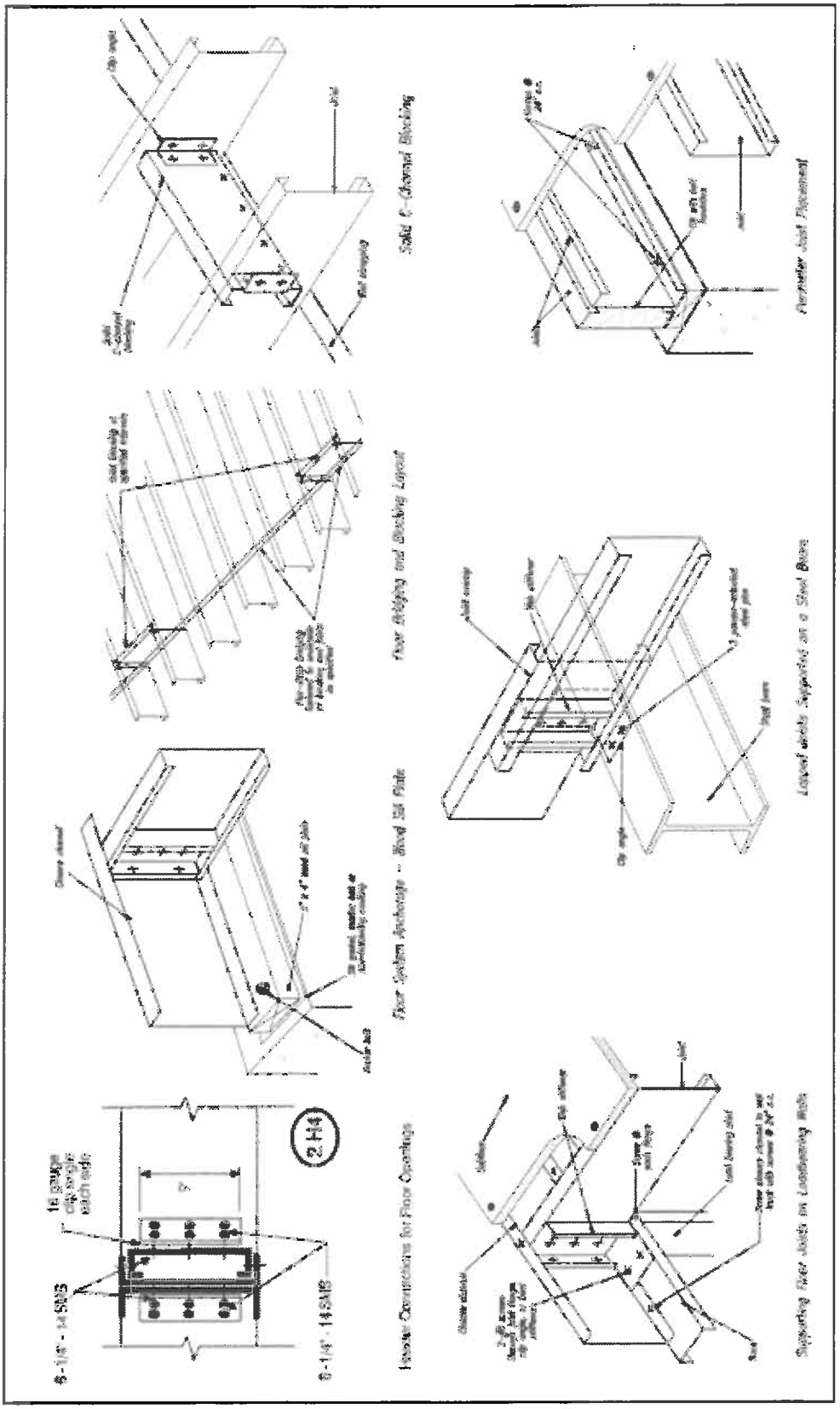

FIGURE 4.5A FLOOR JOIST DETAILS

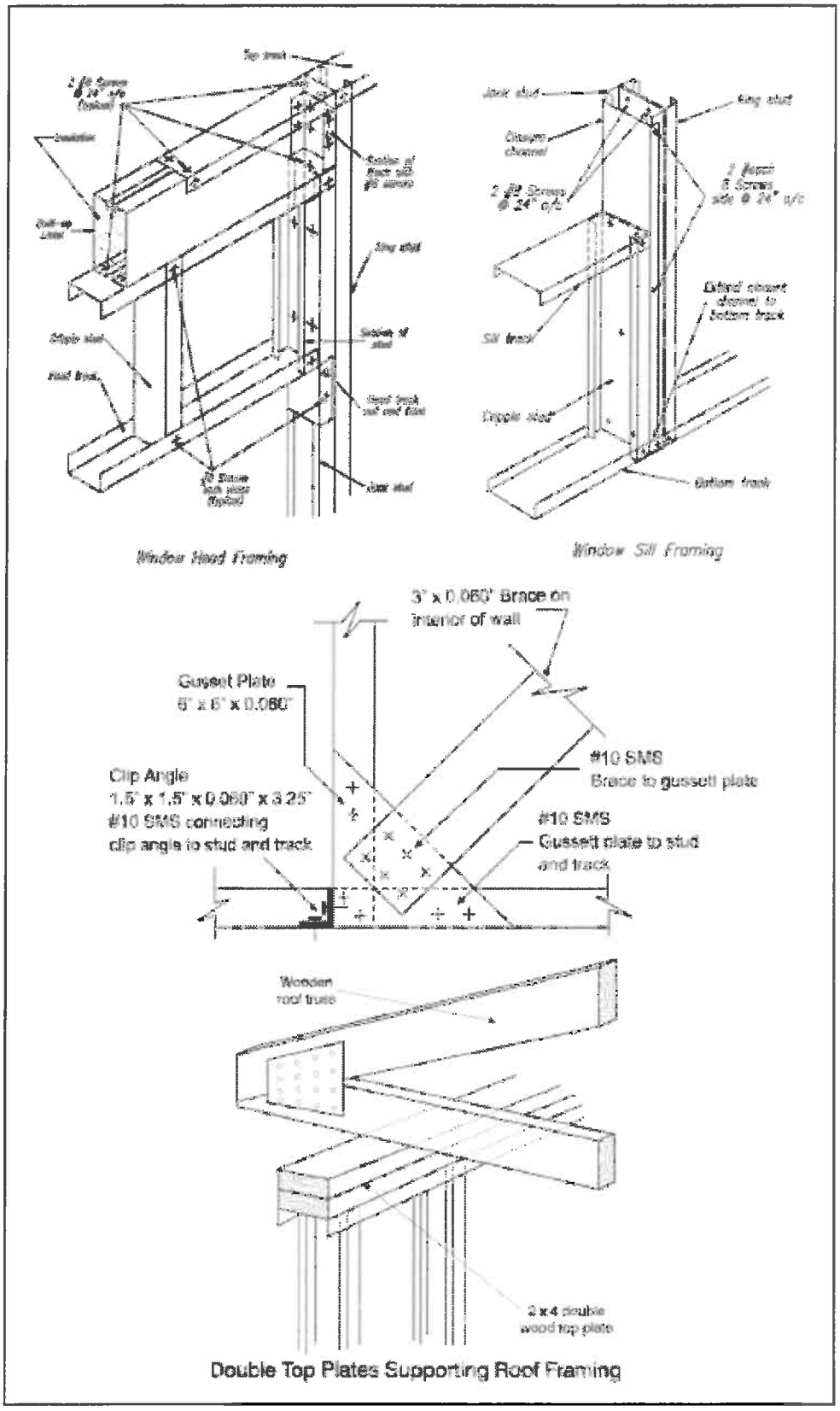

FIGURE 4.5B WALL STUD DETAILS

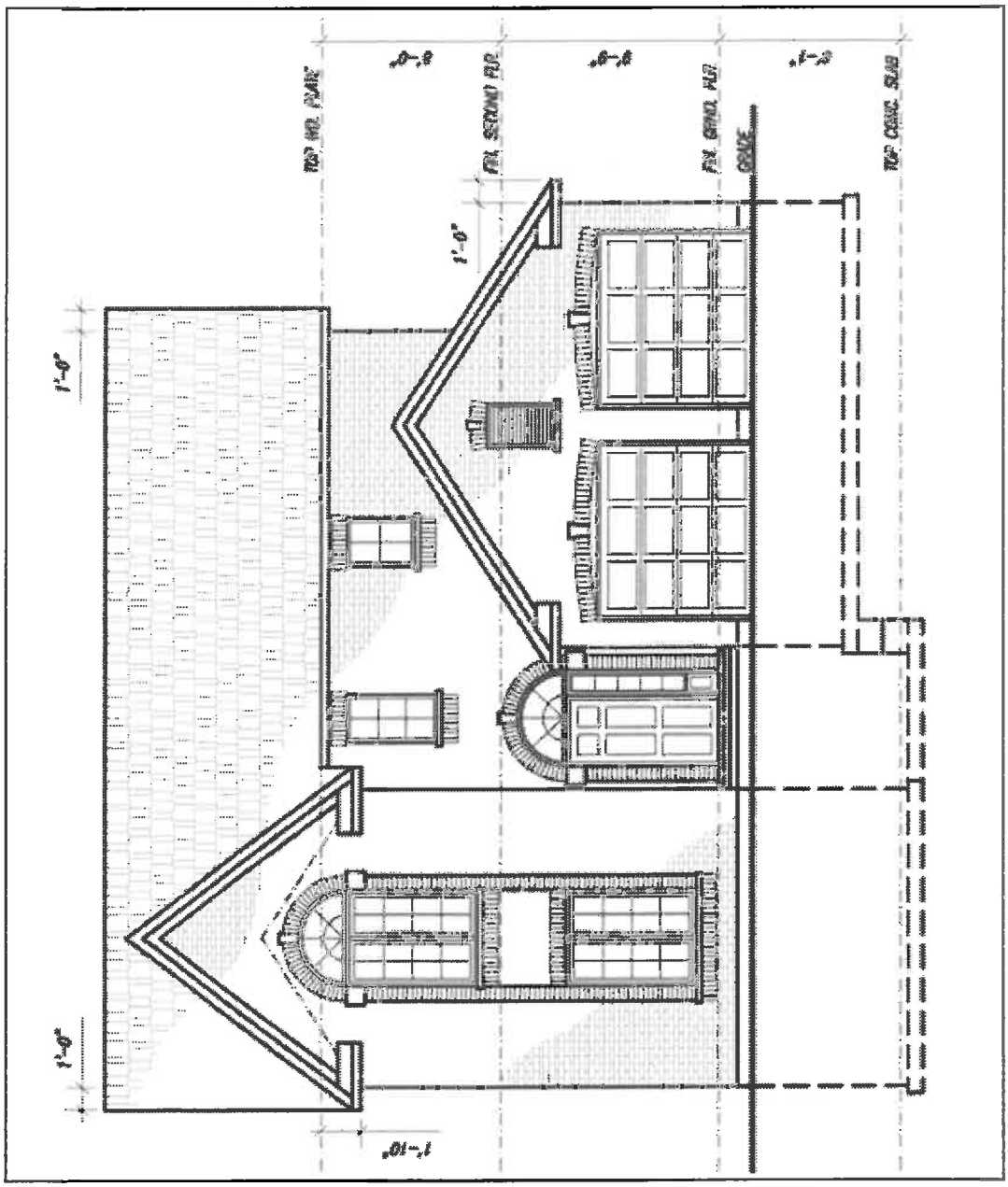

FIGURE 4.6 FRONT ELEVATION

5. MANUFACTURING STEEL

Chapter Objective

The purpose of this chapter is to familiarize the student with the production of steel, sheet steel, and cold formed LSF materials. The student will also be introduced to the process of ordering LSF from a roll former, supplier, and distributor.

Specific Learning Objectives

After completing this chapter, the student should be able to:

Objective 5.1: Identify the two standard production methods for steel;
Objective 5.2: Differentiate between the integrated and electric furnace processes for steel production;
Objective 5.3: Identify the three raw materials used in the integrated process to make steel and how each raw material contributes to the final product;
Objective 5.4: Describe how sheet steel is made from slabs;
Objective 5.5: Develop a familiarity with cold formed steel and the roll forming process by participating in a tour and/or viewing a video or slides of a roll forming plant;
Objective 5.6: State the standard stud widths and lengths produced by most roll formers for the residential market;
Objective 5.7 List the advantages and disadvantages of ordering material cut-to-length;
Objective 5.8: Demonstrate the ability to read and comprehend the product identification code on steel framing products;
Objective 5.9: Discuss the consequences of ordering material from a roll-former and a distributor/supplier.

Suggested Activities

The recommended format of training is classroom instruction and field trips. Most regions of the country are not near an integrated steel mill or mini-mill (electric furnace). If the training location is near a steel mill, it will be valuable for the students to see how steel is manufactured. Section 5.2 Steel Production and Figures 5.1 and 5.2 give a brief overview of steel production.

More importantly, if the training center is near a roll former, it is very beneficial for the students to see how steel framing materials are produced, and how the production of steel affects the roll former. The more knowledgeable the student is about the production and ordering processes, the more successful they will be in their job.

Contact a steel mill operator and roll former well in advance and ask permission for the students to visit the plant. Roll formers in general are very receptive to providing tours of their plants to potential steel framing workers and contractors. Arrange transportation for the students to visit the plant.

Have someone at the roll forming plant give a short tour of the operation, beginning with the receipt of the coils from the steel manufacturers, and finishing with the shipping of the final formed product. Make sure the students wear the appropriate personal protective equipment. Allow time throughout the tour for questions.

Some specific points that should be addressed during the tour include:

- how the roll former receives orders and how those orders are processed;
- how the roll former deals with residential orders and how detailed the cut-lists must be for the roll former to process them;
- the different types of steel (thickness, coating, grade) used in the roll forming plant and how the plant tracks the different types of steel;
- how the roll former tracks mill certificates and performs any material testing (quality control) that is required.

Have the roll former provide catalogues and price lists of their products for the students. A list of LSF manufactures is available from CSSBI.

Materials and Equipment

Material required for this chapter is summarized in the table below.

Item	Quantity
Set of slides showing the steel-making process (optional)	1
Set of slides showing the roll forming process (optional)	1
Ear & eye protection,	1 each
Safety hard hats, safety boots (student provides own)	-
Roll former catalogues and price lists	12
Standard studs, joists, track and accessories	-
Transportation from training facility to roll former	1

5. MANUFACTURING STEEL

5.1 Introduction

Before beginning to work with LSF materials, it is important that the student understand how the material is manufactured. This will increase the workers' and contractors' confidence in the product, and allow them to deal more effectively with the roll formers, suppliers, and distributors. The discussion is divided into the following sections:

Section 5.2: Steel Production
Section 5.3: Sheet Steel and Coil Formation
Section 5.4: Cold Formed LSF
Section 5.5: Ordering LSF Materials

This chapter gives a brief introduction to basic steel production and steel framing manufacturing. It also describes the current options for the purchase of steel framing materials.

5.2 Steel Production

The steel used for steel framing is cold formed from sheet steel which is produced by steel mills. The steel mills, also known as steel producers and suppliers, produce steel using either the **integrated** or **electric furnace** process.

5.2.1 Integrated Process

The **integrated process** uses **iron ore**, **limestone**, and **coal** to make steel. Limestone and coal are used to smelt the iron ore into molten iron in a blast furnace. The coal is distilled to make **coke** (a residue of coal used as fuel). Coke fuels the steel-making process by changing iron ore to **molten iron**. The limestone removes impurities from the iron, forming a molten by-product known as **slag**. Blast furnace slag is used to make aggregate and insulation by-products. The molten iron is then combined with scrap steel and refined in a basic oxygen furnace to produce **molten steel**.

5.2.2 Electric Furnace Process

The **electric furnace process** is an alternate process that generally consumes less energy and relies on steel recycling. In this process scrap steel is remelted in an electric furnace to produce molten steel. Approximately sixty-five percent of the steel produced today in North America is made from recycled steel.

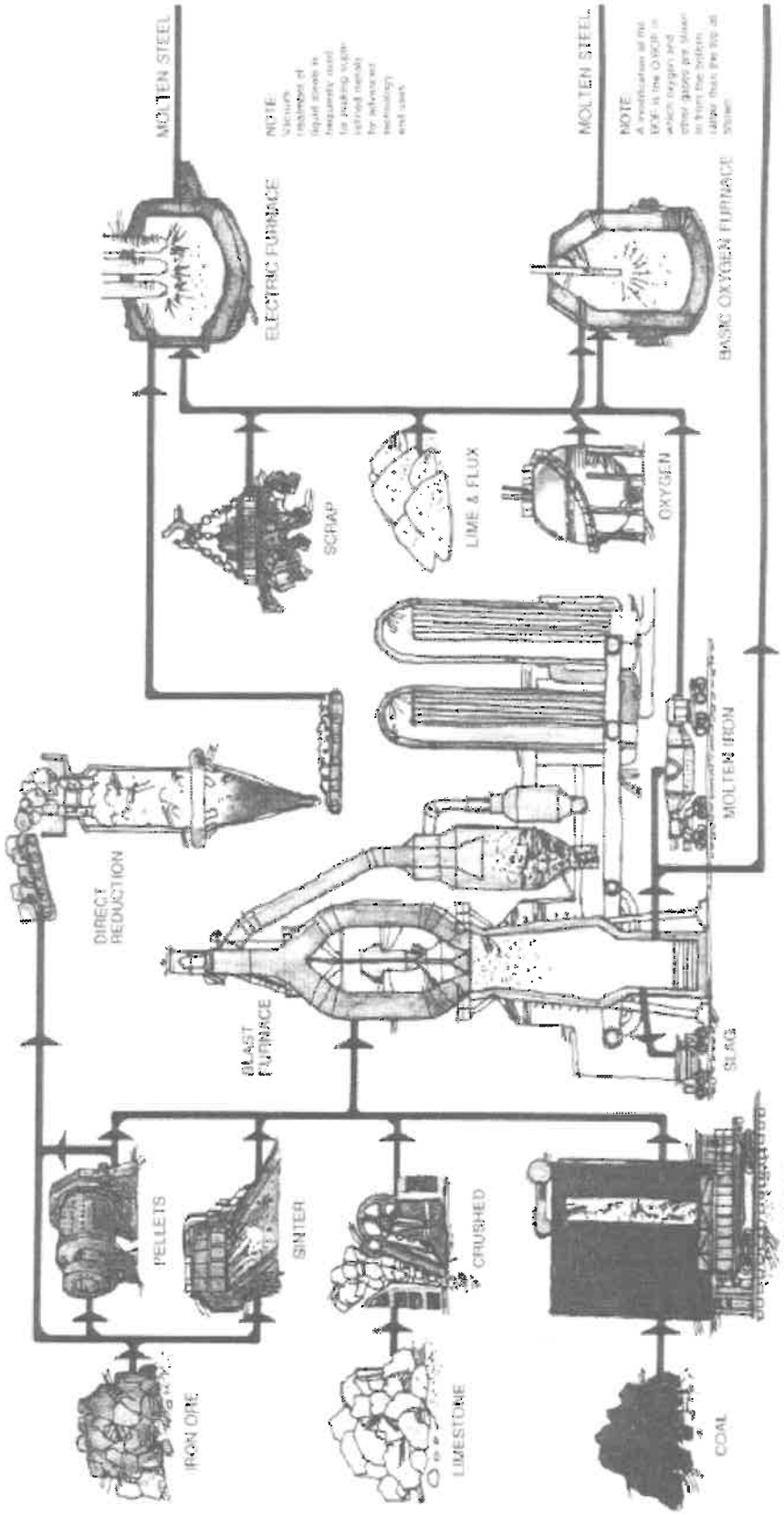

FIGURE 5.1A STEELMAKING PROCESS 1/2

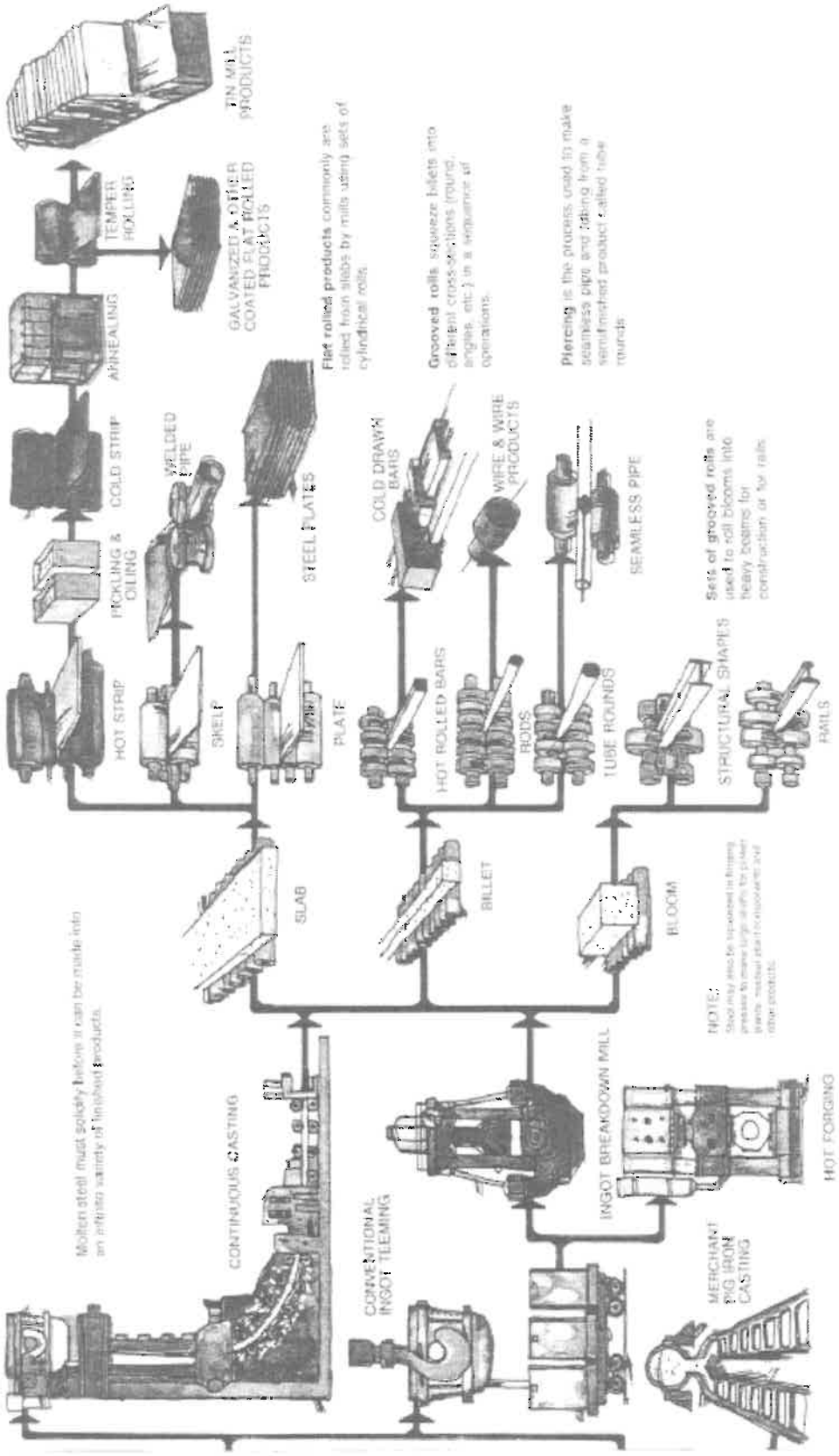

FIGURE 5.1B STEELMAKING PROCESS 2/2

5.3 Sheet Steel and Coil Formation

The rectangular slabs of solid steel are then passed through a series of rollers that press the steel into thin **sheets** of specific thickness, strength, and other physical properties.

The sheets of steel are then sent through a continuous hot-dip process that applies a **metallic coating** of zinc (galvanized) or zinc-aluminum (Galvalume ™) onto the surface to prevent the steel from rusting.

The sheets are then rolled into **master coils** and banded. Each master coil weighs approximately 20,000 to 25,000 lb (9,050 to 11,350 kg).

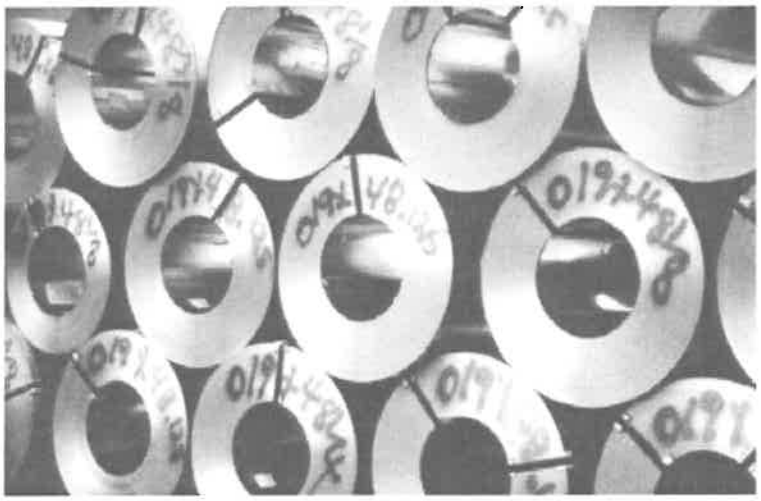

FIGURE 5.2 STEEL COILS

5.4 Cold Formed Steel

The next step in the production of steel framing materials is the forming and shaping of studs, track, and joists from the steel coils.

5.4.1 Cold Formed Steel (CFS)

Cold formed steel (CFS) is sheet steel that has been formed to a specific geometry by a process of roll forming or press braking. While larger steel members such as I-beams are formed or rolled while red hot, the forming process for lightweight steel framing (LSF) takes place when the steel is at normal room temperature, hence the term **cold forming**.

5.4.2 Roll Forming

The roll forming manufacturer, or **roll former**, will order master coils of specific thickness, metallic coating weight, and grade from the steel producer. When they arrive from the steel mill, the master coils are normally too wide for the roll forming process. Therefore, the first step is to cut the master coils into coils of precise width using a **slitter**.

After the coils come off the slitter, they are ready for **roll forming**. The coils are fed into the roll forming machine where the sheet steel is passed through a series of **dies** (or rollers) that bend the sheet steel into a desired shape. The dies are set to roll specific sizes and shapes such as the standard 3-5/8 in (92 mm) wall stud.

Stud, track, and joist material can be cut to length on the roll forming equipment to within 1/8 in (3 mm) to meet material requirements on a job. Lengths are restricted only by practicality and physical transportation limitations. Truck beds and containers can usually handle up to 40 ft (12 m) lengths.

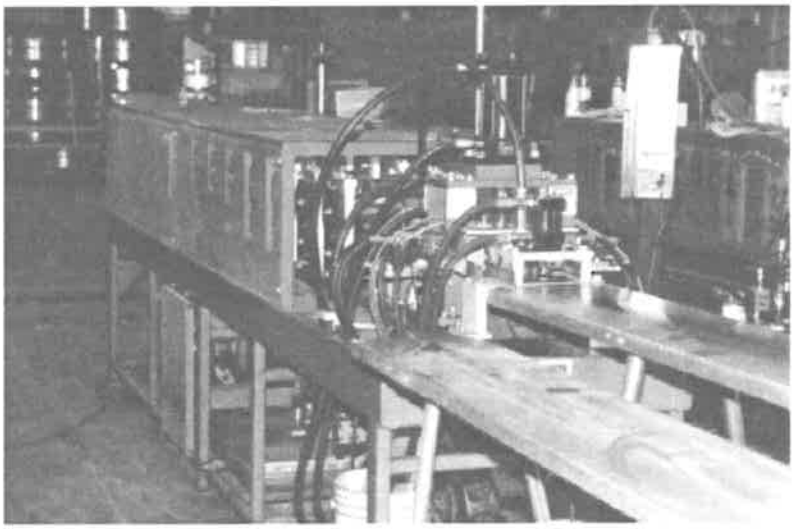

FIGURE 5.3 ROLL FORMING

5.4.3 Identification of Steel Framing Members

Each loadbearing steel framing member will have a legible label, stamp or embossment with the following information as a minimum:

- Manufacturer's identification, and
- CCMC certification number.

The manufacturer may also include additional information such as a member size and material designation.

5.5 Ordering LSF Materials

There are two major sources for steel framing materials. Steel framing material can be ordered directly from the **roll former**, or it can be obtained from **distributors and suppliers** of building materials.

5.5.1 Roll Formers

Roll formers have traditionally sold steel framing materials for commercial projects. These materials consist mainly of studs for non-load bearing partitions and wind bearing curtain walls. Most commercial projects use large quantities of LSF of standard lengths that can be manufactured economically and efficiently by the roll former.

The steel used for the residential market is somewhat different. The steel framing members (because they are load bearing) are thicker, and width and length will vary depending on the component. Steel framing material lists for residential projects are more complicated and can slow down the normal production capabilities of roll forming machinery.

If a contractor can order steel from a roll former, the following points should be considered:

- since production is on a smaller and complex scale, the roll former may increase prices to compensate for lost production time;
- the contractor should carefully compare any increase in price to the reduction of time to cut steel on the job; the cutting of steel is not as efficient as the cutting of lumber at this point in time;
- a positive working relationship should be established with the roll former; usually roll formers have suggestions for providing an order that does not increase steel costs.
- simplifying the LSF order by choosing the same web depth and steel thickness for all floor joists for smaller projects.
- simplifying the LSF order by choosing only two stud sizes and thickness (load bearing and non-load bearing).

5.5.2 Distributors and Suppliers

LSF distributors and suppliers act as "middle-men" between the roll formers and contractors. They buy stock from the roll former and sell to the contractors. Distributors and suppliers will stock standard sizes and lengths. They also sell fasteners, power tools, and drywall in addition to steel framing material. They do not normally cut material to non-standard lengths for the contractor.

Because steel framing for residential construction is still in its infancy, distributors and suppliers tend to stock only non-load bearing framing material. As the market matures, distributors will begin stocking load bearing LSF materials.

5.5.3 Cut-to-Length or Cut-on-Site

The contractor will also have to decide whether to order steel framing material cut-to-length or cut the material on the job site. In either case, extra material should be ordered to cover waste and possible theft on the job site.

For **smaller projects**, ordering steel framing material **cut-to-length** has several advantages:

- floor joists may be ordered to full span which saves on lap splices;
- the time needed to make cuts on the job decreases;
- material storage and inventory is not normally problematic;
- there is less spoilage and wastage of material.

For **larger projects** the contractor is advised to consider ordering standard materials and **cut-on-site**. Ordering steel framing material cut-to-length for larger projects has several disadvantages:

- material storage and inventory on site can be problematic;
- large amounts of material on site often makes it difficult for workers to quickly find the correct material;
- workers who can't quickly find the appropriate framing materials will start to use and cut whatever material they can get their hands on;
- ordering cut-to-length on larger projects often results in greater wastage of material

More information on cut-lists and ordering LSF material is provided in Chapter 6 of this manual.

6. THE CUT-LIST, ORDERING AND STEEL DELIVERY

Chapter Objective

The purpose of this chapter is to provide the student with a process for LSF quantity take-off, and to give them an example procedure that they can follow to develop their own cut-list for a residential steel-framing project.

An essential part of a well-executed steel framing project is the estimation of materials for the steel frame and the development of a **cut-list**. A cut-list results from an accurate material take-off from the blueprints, and lists the LSF requirements by type, size, length and quantity.

This chapter provides a detailed example of how to create an accurate cut list for the LSF members of the design house described in Chapter 4 (exclusive of the house roof framing). This section does not address the estimation of steel framing accessories such as flat strap bracing, fasteners, and clip angles. These accessories are normally purchased in bulk and kept in stock by framers who work with steel framing.

Specific Learning Objectives

After completing this chapter, the student should be able to:

Objective 6.1:	Interpret and obtain framing information and details from blueprints for steel-framed residential structures.
Objective 6.2:	Define what a Cut-List is and state its purpose with respect to the residential steel-framing industry. Describe the benefits of developing an accurate Cut-List for any residential steel-framing project.
Objective 6.3	Given a set of blueprints showing floor joist orientation, spacing, spans, and sizes, demonstrate an understanding of how LSF floor joist quantities are estimated and included in a Cut-List.
Objective 6.4:	Given a set of blueprints showing header and lintel requirements and sizes, demonstrate an understanding of how LSF headers and lintel quantities are estimated and included in a Cut-List.
Objective 6.5:	Having determined the floor joist, header, and lintel requirements for a project, demonstrate an understanding of how LSF joist track quantities are estimated and included in a Cut-List.
Objective 6.6:	Given a set of blueprints showing load bearing and non-load bearing wall dimensions and stud sizes, demonstrate an understanding of how LSF wall stud and jack stud quantities are estimated and included in a Cut-List.
Objective 6.7:	Having determined the wall stud requirements for a project, demonstrate an understanding of how LSF stud track quantities are estimated and included in a Cut-List.
Objective 6.8:	Given a set of blueprints showing garage LSF members, spans, and sizes, demonstrate an understanding of how LSF garage ceiling joists, ridge assembly, and rafter quantities are estimated and included in a Cut-List.

Suggested Activities

The recommended format for training for this chapter is classroom instruction followed up with a reinforcement of the importance of a Cut-List during the construction of a sample dwelling. The alternative to this approach would be to save the delivery of this Chapter until the end of the course. Students would then have a better understanding of the design and assembly of most elements of the dwelling, and the process of developing the Cut-List would be facilitated.

Classroom discussion, slide show presentations, exhibits of the actual steel framing members and assemblies, and frequent reference to the Chapter 4 house plans and the CSSBI publications can be used for the design example. The design example is the 2,270 ft^2 (211 m^2) two-storey house with a full basement and two-car garage, that was used for Chapter 4 Design Process.

Specific items that should be addressed in class include, but are not necessarily limited to, the following:

- the definition and purpose of the Cut-List;
- a quick review of the blueprints and design decisions made in Chapter 4;
- a step-by-step description of the estimation procedures for floor joists, headers, trimmers, lintels, joist track, wall studs, stud track, and the garage roof framing members;
- the rationale for ordering some material cut-to-length and other material in standard lengths to be field-cut.

This chapter provides a detailed step-by-step process that discusses each LSF member separately and builds the Cut-List one element at a time. It is strongly recommended that the development of a Cut-List be attempted after the students have been exposed to the design process, material standards, and the assembly of both a floor system and a wall system.

Materials and Equipment

Material and equipment required for this chapter is summarized in the table below:

Item	Quantity
CSSBI Steel Framing for Part 9 Construction (reference)	2
CSSBI Installation Manual	1 each
Chapter 4 Design Process and Plans for Design House	1 each
Samples of joist, stud, and track LSF members	-
Calculator (student provides own)	-

6. THE CUT-LIST, ORDERING AND STEEL DELIVERY

6.1 Introduction

An essential part of a well-executed steel framing project is the estimation of materials for the steel frame and the development of a **cut-list**. A cut-list results from an accurate material take-off from the blueprints, and lists the LSF requirements by type, size, length and quantity. It is usually written in the format of a bill-of-material for use by the roll-former, distributor and/or contractor.

This chapter will illustrate how to create an accurate cut list for the LSF members of the design house described in Chapter 4 (exclusive of the house roof framing). This section does not address the estimation of steel framing accessories such as flat strap bracing, fasteners, and clip angles.

Time spent developing a detailed cut-list can save time and effort on the job site. The cut-list makes it easier to keep the framing components grouped together to reduce job site sorting time. Cut-lists simplify the ordering process and by ordering a significant amount of the LSF members cut-to-length, there is a great reduction in field cutting.

This chapter is divided into the following sections:

Section 6.2: The Cut-List
Section 6.3: Floor Joists
Section 6.4: Headers and Lintels
Section 6.5: Joist Track
Section 6.6: Wall Studs
Section 6.7: Stud Track
Section 6.8: Garage LSF Members
Section 6.9: The Final Cut-List

The purpose of this chapter is to provide the student with a process for LSF quantity take-off, and to give them an example procedure that they can follow to develop their own cut-list for a residential steel-framing project.

6.2 The Cut-List

6.2.1 The Cut-List Defined

The **Cut-List** is an orderly table containing the LSF member requirements specified by type, size, length and quantity. LSF members are normally specified in the cut-list using the following categories:

- floor joists,
- headers,
- lintels,
- floor joist track,
- load bearing wall studs,
- non-load bearing wall studs,
- jack studs,
- load bearing wall track,
- non-load bearing wall track,
- garage and roof framing members.

Contractors who traditionally use wood framing have not had to make detailed framing material lists. They have often relied on the designers or distributors to do a quantity take-off and create a list of framing materials. A wood cut-list tends to be simple since field cutting with wood is an acceptable practice, and the estimation of material for residential wood-framed construction is a well-established process. Experienced framers will know how much wood to order, in what lengths, and what **'overage'** is required for miscellaneous framing details.

An accurate cut-list is very important with residential steel framing. Contractors who make their own lists have better control of their job costs. A mistake in the cut-list could result in a delay in the field. The steel framing industry is relatively new. Distributors and roll formers may not be able to make a cut-list for the contractor. Therefore, contractors should be familiar with cut-lists and knowledgeable enough to make their own.

When doing a quantity take-off and making a cut-list it is important to keep the list simple by minimizing the number of steel sizes (dimension and thickness) and grouping the assembly pieces (floor, wall and roof structure) together.

The final cut-list for the design house described in chapter 4 is found in Table 6.18 at the end of this chapter.

6.2.2 Design Example

In order to provide the student with a working example, he/she is referred back to Chapter 4 Design Process. This residential dwelling will be used to explain the process of quantity take-off and making the cut-list. The decisions made regarding LSF member size, thickness and length will be used in this chapter. The student will undoubtedly want to use the plans provided in Chapter 4 as a major reference throughout this chapter.

Wherever possible, reference is made to both the set of drawings provided at the end of Chapter 4 and the CSSBI *Installation Manual* (CSSBI *RSFIM*). To simplify this chapter and many of the tables for the student, all dimensions will be given in imperial units. The reader can perform a conversion to metric if needed.

6.3 Floor Joists

Sizing of the ground floor and second floor joists was performed in Chapter 4 Section 4.4. The final floor joist sizes were determined in Chapter 4 Section 4.4.5 as 41 x 203 x 1.22 for both floors to simplify construction and ordering.

Experienced steel framers will prepare a cut list in advance of construction, but wait until the foundation is completed before ordering the steel. Minor variations in foundation placement can be accommodated during assembly, but if the foundations are not placed as per the plans, a field measurement is recommended before placing the steel order. The location of any steel support beams should also be confirmed with a field measurement.

6.3.1 Joist Connection Details

The length of a floor joist depends not only on the clear span but also on the connection detail used at each bearing end of the joist. Numerous types of connection details will exist for this dwelling, and include:

- floor joist-to-rim joist bearing on foundation wall;
- floor joist-to-rim joist bearing on load bearing stud wall;
- floor joist bearing on a support beam (with and without overlap);
- floor joist terminating at a header for floor openings;
- ladder joist assembly bearing on a load bearing stud wall.

Before estimating the number and lengths of floor joists, it is necessary to examine the different types of end details and their lengths. Table 6.1 contains a list of end detail types, arbitrarily identified as Type A through I. Each detail is described and the length beyond the clear span is shown.

Table 6.1: Joist End Details

End Detail	Description of Connection - End Detail	Length (inches)
A	Inside of foundation wall to rim joist less 1/8" clearance between floor joist and rim joist. • Chapter 4 - Figure 4.4 Detail "A" • CSSBI *RSFIM Figure 5.2.3*	4 3/8"
B	Centreline of support beam to end of joist (overlapped) • Chapter 4 - Figure 4.5A • CSSBI *RSFIM Figure 5.4.3c*	6"
C	Centreline of support beam to end of joist (not overlapped).	3"
D	Inside face of drywall to rim joist less 1/8" clearance between joist and rim joist. • Chapter 4 - Figure 4.5A • CSSBI *RSFIM Figure 5.4.3b*	3 7/8"
E	Inside face of ground floor drywall to rim joist less 1/8" clearance between joist and rim joist. • Chapter 4 - Figure 4.4 Detail "B"	8 5/8"
F	Edge of opening to face of header plus 1/8" clearance between header face and joist • Chapter 4 - Figure 4.5A • CSSBI *RSFIM Figure 5.4.7b Detail 2H4*	-1 7/8"
G	Inside of foundation wall to end of laundry room floor joist (with rim joist bearing on a 2 x 4 sill plate). • Chapter 4 – Figure 4.5A • CSSBI *RSFIM Figure 5.4.3b*	-1/4"
H	Inside face of drywall to rim joist less 1/8" clearance between joist and rim joist (with siding veneer) • Chapter 4 – Figure 4.4 Detail "B"	8 5/8"
I	Inside face of drywall to rim joist less 1/8" clearance between joist and rim joist (with brick veneer) • Chapter 4 – Figure 4.4 Detail "A"	3 7/8"

6.3.2 Floor Joist Length

Using the end detail lengths described in Table 6.1, the required length of the floor joists are calculated using the clear span plus the end detail lengths as shown in Tables 6.2 and 6.3. Some of the joists must be the **exact length** shown in order that they not protrude beyond a wall or opening. Joists that must have an exact length are marked with an asterisk and an explanation is provided at the bottom of the table. A joist with an end that overlaps another joist, can be longer than the length shown.

Table 6.2: Ground Floor Joist Lengths

Joist Number	Description of Joist Length	Joist Length (ft' – in")	End Detail Distance (inches)	End Detail Distance (inches)	Required Length (ft' – in")
J1*	Inside west wall of foundation to centre of support beam	11' – 8"	Detail A 4 3/8" (west end)	Detail C 3" (east end)	12' – 3 3/8"
J2A*	Inside south wall of foundation to centre of support beam	11' – 8"	Detail A 4 3/8" (south end)	Detail B 6" (north end)	12' – 6 3/8"
J2B*	Inside south wall of foundation to inside north wall of foundation	11' – 8"	Detail A 4 3/8" (south end)	Detail A 4 3/8" (north end)	12' – 4 3/4"
J3	Centre of support beam to opening	3' – 2"	Detail F -1 7/8" (south end)	Detail B 6" (north end)	3' – 6 1/8"
J4	Centre of support beam to centre of support beam	5' – 7"	Detail C 3" (south end)	Detail B 6" (north end)	6' – 4"
J5	Centre of support beam to centre of support beam	9' – 0"	Detail B 6" (south end)	Detail B 6" (north end)	10' – 0"
J6	Inside north wall of foundation to centre of support beam	7' – 3"	Detail A 4 3/8" (north end)	Detail B 6" (south end)	8' – 1 3/8"
J7	Inside north wall of foundation to centre of support beam	11' – 7"	Detail A 4 3/8" (north end)	Detail B 6" (south end)	12' – 5 3/8"
J8	Centre of support beam to centre of support beam	5' – 5"	Detail C 3" (north end)	Detail B 6" (south end)	6' – 2"
J9*	Inside north wall of foundation to centre of support beam	6' – 2"	Detail C 3" (south end)	Detail G -1/4" (north end)	6' – 4 3/4"

J1* - exact length due to stairway opening
J2A* - exact length due to stairway opening
J2B* - exact length due to foundation wall to foundation wall
J9* - exact length due to sunken laundry room

Table 6.3: Second Floor Joist Lengths

Joist Number	Description of Joist Length	Joist Length (ft' – in")	End Detail Distance (inches)	End Detail Distance (inches)	Required Length (ft' – in")
J10*	Inside of west exterior wall to inside of partition	11' – 6 1/2"	Detail H 8 5/8" (west end)	Detail D 3 7/8" (east end)	12' – 7"
J11*	Inside of south exterior wall to inside of partition	11' – 5 1/2"	Detail H 8 5/8" (south end)	Detail D 3 7/8" (north end)	12' – 6"
J12	Inside of south exterior wall to centre of support beam	11' – 7 1/2"	Detail H 8 5/8" (south end)	Detail B 6" (north end)	12' – 10 7/8"
J13*	Inside of south exterior wall to inside of north exterior wall	11' – 5 1/2"	Detail H 8 5/8" (south end)	Detail I 3 7/8" (north end)	12' – 6"
J14*	Inside of west exterior wall to opening at H2	11' – 10 1/2"	Detail H 8 5/8" (west end)	Detail F -1 7/8" (east end)	12' – 5 1/4"
J15*	Inside of north exterior wall to opening at H3	14' – 9 1/2"	Detail H 8 5/8" (north end)	Detail F -1 7/8" (south end)	15' – 4 1/4"
J16	Inside of north exterior wall to centre of partition	20' – 6 1/2"	Detail H 8 5/8" (north end)	Detail D 3 7/8" (south end)	21' – 7"
J17	Inside of north exterior wall to centre of partition	20' – 8 1/2"	Detail H 8 5/8" (north end)	Detail B 6" (south end)	21' – 11 1/8"
J18	Inside of north wall to centre of support beam	7' – 3 1/2"	Detail I 3 7/8" (north end)	Detail B 6" (south end)	8' – 1 3/8"
J19*	Inside of north exterior wall to inside of partition	11' – 6 1/2"	Detail H 8 5/8" (north end)	Detail H 8 5/8" (south end)	12' – 11 3/4"
T1	Inside of partition to inside of partition (2 joists and 1 track)	8' – 8"	Detail D 3 7/8" (north end)	Detail D 3 7/8" (south end)	9' – 3 3/4"
Ladder Joists @ J10, J19	Chapter 4 - Figure 4.4 Detail "C"				1' – 4"

J10* - exact length due to stairway opening
J11* - exact length due to stairway opening
J13* - exact length due to exterior wall to exterior wall
J14* - exact length due to stairway opening header H2
J15* - exact length due to stairway opening header H3
J19* - exact length due to J14 at south end

NOTE: *It is strongly recommended that floor joist lengths are not finalized until the foundation has been poured and an accurate "as-built" measurement of the foundation dimensions can be taken.*

6.3.3 Number of Floor Joists

To determine the minimum number of joists for any floor width, the width is divided by the joist spacing (16 inches o/c). This number is rounded up to the nearest whole number and gives the number of 'spaces' between joists. One more joist is added to account for joists at both ends.

In addition to this minimum number of joists, extra joists are required under the following situations:

- when a non-load bearing partition wall runs parallel to the underlying floor joists, a double joist must be placed under the partition (see CSSBI *RSFIM Figure 5.4.3a*);
- when joists run parallel to the foundation wall, an additional perimeter joist is required (see CSSBI *RSFIM Figure 5.4.3g*);
- when second floor joists run parallel to an exterior load bearing wall, an additional joist would be required to bear on the wall where the exterior finishes are similar with nearly identical finished wall thickness.

NOTE: *The design house has brick veneer and vinyl siding for the first and second floor exterior walls respectively. The difference in wall thickness forces the second floor wall beyond the in-line support of the first floor wall and a modified detail is engineered. This detail is shown in Chapter 4 – Figure 4.4 Detail "B" and "C".*

An assembly called a **ladder** or **lookout** is made to bear on the ground floor exterior wall and fastened to the second floor joist adjacent to the wall as shown in Chapter 4 – Figure 4.4 Detail "C". This detail is not included in the CSSBI *Installation Manual* and has been designed and approved by a design engineer.

The ladder assembly is the width of a joist spacing (16 inches) and is assembled with 16 in (406 mm) pieces of 8 in (203 mm) deep joist sections. Each joist section is fastened at both ends to 8 in (203 mm) track with clip angles and screwed through the flanges at 16 in (406 mm) o/c. The joist pieces must be in-line with the wall studs below and are fastened to the wall track below with 2 - #8 screws. The ladder is fastened to the adjacent second floor joist with 2 - #8 screws at 24 in (610 mm) o/c.

Based on the above guidelines, the number of joists are calculated as shown in Tables 6.4 and 6.5.

Table 6.4: Number of Ground Floor Joists

Joist Number	Floor Width (ft' – in")	Number of 16" Spaces	Base Number of Joists	Extra Joists Under Parallel Partitions	Extra Perimeter Joists	Total Number of Joists
J1	21' – 6"	17	18		1 south wall	19
J2A	22' – 3"	17	18	1 dining room wall		19
J2B	4' – 10"	4	5		1 east wall	6
J3	3' – 4"	3	4			4
J4	6' – 1"	5	6			6
J5	10' – 0"	8	9			9
J6	2' – 10"	3	4		1 east wall	5
J7	20' – 6"	16	17		1 west wall	18
J8	9' – 7"	8	9	2 family room wall powder room wall	1 east wall	12
J9	9' – 7"	8	9			9

Table 6.5: Number of Second Floor Joists

Joist Number	Floor Width (ft' – in")	Number of 16" Spaces	Base Number of Joists	Extra Joists Under Parallel Partitions	Extra Perimeter Joists	Total Number of Joists
J10	18' - 4 1/2"	14	15	1 wall between ensuite and bedroom #2	-1 J14 at north end	15
J11	12' – 4"	10	11	1 closet wall		12
J12	6' - 3 ½"	5	6			6
J13	8' – 4"	7	8		1 east wall	9
J14	2' – 11"	3	4			4
J15	8' – 8"	7	8	2 bathroom and bedroom #3 bathroom and bedroom #4		10
J16	3' – 8"	3	4			4
J17	4' - 3 ½"	4	5		1 east wall	6
J18	2' – 10"	3	4		1 east wall	5
J19	12' - 8 1/2"	10	11	1 bathroom and bedroom #3	-1 J15 at east end	11
T1	n/a					2
Ladder joists @J10	12' – 7"	10	11			11
Ladder joists @J19	12' – 7"	10	11			11

6.3.4 Cut-List: Floor Joists

The cut-list can now be started using the above information for the floor joists. The smallest number of different cut lengths is normally more economical. However, some of the joists must be cut to the exact length. A joist that does not require an exact length can be cut to the same length as a slightly longer exact length joist. For example, J7 can be cut from a piece of joist having the same length as J2A.

By combining joist lengths, when reasonable to do so, the floor joist Cut-List is generated. Different items are numbered arbitrarily 1 through 12 as shown in the preliminary Cut-List Table 6.6. It is prudent to have spare floor joist material at the job site to use for web stiffeners, bridging, damaged material, etc. Two extra lengths of the longest floor joist (J17) have been added to the Cut-List.

It should be noted that the joists in the Cut-List are based on minimal field cutting. If the joists were to be all cut in the field, the Cut-List would require considerably fewer item numbers. Items 1 through 9, for example, could all be cut from 13' joist lengths.

Note that one length of joist track 9'-3 3/4" long, is required for trimmer joist T1. This length will be cut from one standard 12' length of joist track. This length is show without an item number on the Cut-List at this time, because there will be more track sections determined later in this chapter.

Table 6.6: Preliminary Cut-List: Floor Joists

Item Number	Description	Size	Quantity	Ordered Length (ft' – in")
1	J1 floor joists	41 x 203 x 1.22	19	12' – 2 3/8"
2	J2A, J7 floor joists	41 x 203 x 1.22	37	12' – 6 3/8"
3	J2B floor joists	41 x 203 x 1.22	6	12' - 4 3/4"
4	J5, J6, J18, T1 floor joists	41 x 203 x 1.22	21	10' – 0"
5	J9, J3, J4, J8 floor joists	41 x 203 x 1.22	31	6' - 4 3/4"
6	J10, J19 floor joists	41 x 203 x 1.22	26	12' – 11 3/4"
7	J11, J13 floor joists	41 x 203 x 1.22	21	12' – 6"
8	J12 floor joists	41 x 203 x 1.22	6	12' - 10 7/8"
9	J14 floor joists	41 x 203 x 1.22	4	12' – 5 1/4"
10	J15 floor joists	41 x 203 x 1.22	10	15' – 4 1/4"
11	J17, J16, 2 spare floor joists	41 x 203 x 1.22	10	21' - 11 1/8"
12	ladder joists	41 x 203 x 1.22	22	1' – 4"
T1 joist track		30 x 203 x 1.22	1	12' – 0"

6.4 Headers and Lintels

6.4.1 Header and Lintel Lengths

Lintels are longer than the width of the rough opening. The length of lintel material is the opening width plus 2 x 1 – 5/8" or 3 – 1/4" to account for the width of jack studs on either side of the opening. Lintel members can be either ordered cut-to-length or ordered in standard lengths and field cut. For this estimate it is assumed that the lintels will be cut-to-length. Rough opening dimensions were established in Chapter 4 Table 4.3.

Header H1 for the ground floor stairway opening is the length of the opening (3' – 4") plus the width of the supporting steel beam (6") for a total length of 3' – 10". Headers H2 and H3 are ordered three inches longer than the opening dimension and will be field cut to the required length on site.

The final lintel lengths are shown in Table 6.7.

6.4.2 Number of Headers and Lintels

The three headers H1, H2, and H3 were designed in Chapter 4 Section 4.4.6 and consist of one joist (41 x 203 x 1.22) and two track sections (30 x 203 x 1.22). Lintel Type L2 was chosen for the remaining lintels L1 through L20 in the dwelling. This lintel type consists of two joists (41 x 203 x 1.52).

The number of headers and lintels required are shown in Table 6.7.

Table 6.7 – Lengths and Number of Headers and Lintels

Header/Lintel Designation	Description	Rough Opening Width (ft' – in")	Length Required (ft' – in")	Quantity
H1	1 joist - 41 x 203 x 1.22	3' – 4"	3' – 10"	1
	2 tracks - 30 x 203 x 1.22	3' – 4"	3' – 10"	2
H2	1 joist - 41 x 203 x 1.22	2' – 11"	3' – 2"	1
	2 tracks- 30 x 203 x 1.22	2' – 11"	3' – 2"	2
H3	1 joist - 41 x 203 x 1.22	8' – 8"	8' – 11"	1
	2 tracks- 30 x 203 x 1.22	8' – 8"	8' – 11"	2
L1	2 joists - 41 x 203 x 1.52	7' – 0"	7' – 3 1/4"	2
L2, L3, L14, L15 & L16	2 joists - 41 x 203 x 1.52	3' – 11"	4' – 2 1/4"	10
L4	2 joists - 41 x 203 x 1.52	5' – 0"	5' – 3 1/4"	2
L5, L6 & L7	2 joists - 41 x 203 x 1.52	1' – 10"	2' – 1 1/4"	6
L8	2 joists - 41 x 203 x 1.52	2' – 11"	3' – 2 1/4"	2
L9, L11, L12 & L22	2 joists - 41 x 203 x 1.52	3' – 0"	3' – 3 1/4"	8
L10, L13 & L21	2 joists - 41 x 203 x 1.52	4' – 0"	4' – 3 1/4"	6
L17 & L18	2 joists - 41 x 203 x 1.52	2' – 5"	2' – 8 1/4"	4
L19 & L20	2 joists - 41 x 203 x 1.52	2' – 2"	2' – 5 1/4"	4

6.4.3 Joist Track Sections

Joist track sections are required for headers H1, H2 and H3. They can be field-cut from standard 12 foot lengths of track (see Section 6.5).

Two 3' – 11" sections of track are required for H1, two 3' – 2" sections for H2, and two 8' – 11" sections for H3. One standard 12 foot length will provide the track for H1. One standard 12 foot length will provide the track for H2. Two standard 12 foot sections will provide the track for H3. Thus, four 12 foot lengths of joist track are required for these header and lintel assemblies. They are included in the non-numbered item in the preliminary Cut-List Table 6.8.

6.4.4 Cut-List: Floor Joists, Headers and Lintels

Having determined the LSF member requirements for the headers and lintels, the Cut-List is expanded to include them as seen in Table 6.8. The header and lintel joist sections will be ordered cut-to-length and are numbered as items 13 through 25.

Table 6.8: Preliminary Cut-List: Floor Joists, Headers & Lintels

Item Number	Description	Size	Quantity	Ordered Length (ft' – in")
1	J1 floor joists	41 x 203 x 1.22	19	12' – 2 3/8"
2	J2A, J7 floor joists	41 x 203 x 1.22	37	12' – 6 3/8"
3	J2B floor joists	41 x 203 x 1.22	6	12' - 4 3/4"
4	J5, J6, J18, T1 floor joists	41 x 203 x 1.22	21	10' – 0"
5	J9, J3, J4, J8 floor joists	41 x 203 x 1.22	31	6' - 4 3/4"
6	J10, J19 floor joists	41 x 203 x 1.22	26	12' – 11 3/4"
7	J11, J13 floor joists	41 x 203 x 1.22	21	12' – 6"
8	J12 floor joists	41 x 203 x 1.22	6	12' - 10 7/8"
9	J14 floor joists	41 x 203 x 1.22	4	12' – 5 1/4"
10	J15 floor joists	41 x 203 x 1.22	10	15' – 4 1/4"
11	J17, J16, 2 spare floor joists	41 x 203 x 1.22	10	21' - 11 1/8"
12	ladder joists	41 x 203 x 1.22	22	1' – 4"
13	H1 header	41 x 203 x 1.22	1	3' – 10"
14	H2 header	41 x 203 x 1.22	1	3' – 2"
15	H3 header	41 x 203 x 1.22	1	8' – 11"
16	L1 lintel	41 x 203 x 1.52	2	7' – 3 1/4"
17	L2, L3, L14, L15 & L16 lintels	41 x 203 x 1.52	10	4' – 2 1/4"
18	L4 lintel	41 x 203 x 1.52	2	5' – 3 1/4"
19	L5, L6 & L7 lintels	41 x 203 x 1.52	6	2' – 1 1/4"
20	L8 lintel	41 x 203 x 1.52	2	3' – 2 1/4"
21	L9, L11, L12 & L22 lintels	41 x 203 x 1.52	8	3' – 3 1/4"
22	L10, L13 & L21 lintels	41 x 203 x 1.52	6	4' – 3 1/4"
23	L17 & L18 lintels	41 x 203 x 1.52	4	2' – 8 1/4"
24	L19 & L20 lintels	41 x 203 x 1.52	4	2' – 5 1/4"
T1 joist track		30 x 203 x 1.22	1	12' – 0"
header & lintel track		30 x 203 x 1.22	4	12' – 0"

6.5 Joist Track

It is common practice to field-cut and fit joist track from standard lengths. In the design house, standard lengths of 12 feet are chosen for the joist track. The size of the track (30 x 203 x 1.22) was determined in Chapter 4. Longer track sections can be ordered but the probability of damage increases with length. Recall that LSF member length is also restricted by transportation capabilities.

6.5.1 Track Requirements

Floor joists that are perpendicular to an outside wall are capped with a closure channel (rim joist) that is a section of joist track. Note the track section in Chapter 4 – Figure 4.4 Details "A", "B", and "C" or CSSBI *RSFIM Figure 5.2.3.* This situation occurs at various locations in the design house including:

- J1 at the west wall
- J2A, J2B at the south wall
- J2B, J6, J9, J7 at the north wall
- J10, J14 at the west wall
- J11, J12, J13 at the south wall
- J13, J18, J15, J16, J17, and J19 at the north facing walls

On the ground floor, a floor joist that runs parallel to an outside wall is normally doubled over the foundation. This is referred to as a perimeter joist and is shown in Chapter 4 - Figure 4.5A and CSSBI *RSFIM Figure 5.4.3g.* A track section is not required for a double joist resting on the foundation wall. The alternative to this perimeter joist assembly is to use a single joist with web stiffeners as in CSSBI *RSFIM Figure 5.4.3h.*

Perimeter joists are required at the following locations in the design house and will not need track sections:

- J1 at the south wall
- J7 at the west wall
- J2B, J6, J8, J9 at the east wall

On the second floor, the last floor joist parallel to an outside wall is connected to a **ladder** to provide a cantilever over the ground floor exterior wall. This detail is shown in Chapter 4 - Figure 4.4 Detail "C" and requires two joist tracks to cap either end of the ladder joists. Ladder joist assemblies will be required at the following locations:

- J10 at the south wall
- J19 at the west wall

A joist track is not required when a joist passes over a beam or a load-bearing wall and overlaps a joist on the opposite side of the beam or wall. However, if a joist does not overlap another joist, a joist track is required.

For example, joist J2A must be capped with a track over the beam at the stairwell. Another example is joist J19 which is capped with a track over the load bearing partition. This detail is shown in CSSBI *RSFIM Figure 5.4.3b*.

6.5.2 Number of Joist Track Sections

Based on the above information, the joist track required for the floor joists is shown in Tables 6.9 and 6.10. Fourteen 12 foot lengths are required for the ground floor and twenty-one 12 foot lengths are needed for the second floor, for a total of thirty-five 12 foot lengths. Where feasible, two smaller sections of joist track will be cut from one standard 12 foot length. Spare joist material should be kept to splice track sections together where required. Splicing joist track is detailed in CSSBI *Installation Manual Figure 5.4.1*.

Table 6.9: Ground Floor Joist Track Requirements

Description	Length Required (ft' – in")	Number of 12' Standard Lengths Required
J1 west wall cap	21' – 6"	2
J1 support beam cap	21' – 6"	2
J2A & J2B south wall cap	27' – 1"	3
J2A stairwell cap	9' – 5"	1
J2B north wall cap	4' – 10"	-
J4 stairwell cap	6' – 1"	1 (J2B, J4)
J6 north wall cap	2' – 0"	-
J9 support beam cap	9' – 7"	1 (J6, J9)
J8 support beam cap	9' – 7"	1
J7 & J9 north wall cap	30' – 1"	3
Total		14

Table 6.10: Second Floor Joist Track Requirements

Description	Length Required (ft' – in")	Number of 12' Standard Lengths Required
J10 south wall overhang (ladder joist assembly)	2 @ 12' – 8 1/2"	3
J10, J14 west wall	21' – 3 1/2"	3
J10 partition wall	18' – 4 1/2"	2
J11, J12, J13 south wall	26 – 11 1/2"	3
J18 north wall	2' – 10"	-
J11 partition (stairwell)	8' – 8"	1 (J11, J18)
J13 north wall	8' – 4"	1
J19 west wall overhang (ladder joist assembly)	2 @ 12' – 8 1/2"	3
J19, J15, J16, J17 north wall	29' – 4"	3
J19 partition	12 – 8 1/2"	2
Total		21

6.5.3 Cut-List: Floor Joists, Headers, Lintels, and Joist Track

Having determined the LSF member requirements for the joist track, the Cut-List is expanded to include them as seen in Table 6.11. It is prudent to have spare joist track at the job site. Thus, four extra sections are added to the list. The joist track sections will be ordered in standard 12 foot lengths and are numbered as item 25 on the Cut-List.

Table 6.11: Preliminary Cut-List: Floor Joists, Headers, Lintels and Joist Track

Item Number	Description	Size	Quantity	Ordered Length (ft' – in")
1	J1 floor joists	41 x 203 x 1.22	19	12' – 2 3/8"
2	J2A, J7 floor joists	41 x 203 x 1.22	37	12' – 6 3/8"
3	J2B floor joists	41 x 203 x 1.22	6	12' - 4 3/4"
4	J5, J6, J18, T1 floor joists	41 x 203 x 1.22	21	10' – 0"
5	J9, J3, J4, J8 floor joists	41 x 203 x 1.22	31	6' - 4 3/4"
6	J10, J19 floor joists	41 x 203 x 1.22	26	12' – 11 3/4"
7	J11, J13 floor joists	41 x 203 x 1.22	21	12' – 6"
8	J12 floor joists	41 x 203 x 1.22	6	12' - 10 7/8"
9	J14 floor joists	41 x 203 x 1.22	4	12' – 5 1/4"
10	J15 floor joists	41 x 203 x 1.22	10	15' – 4 1/4"
11	J17, J16, 2 spare floor joists	41 x 203 x 1.22	10	21' - 11 1/8"
12	ladder joists	41 x 203 x 1.22	22	1' – 4"
13	H1 header	41 x 203 x 1.22	1	3' – 10"
14	H2 header	41 x 203 x 1.22	1	3' – 2"
15	H3 header	41 x 203 x 1.22	1	8' – 11"
16	L1 lintel	41 x 203 x 1.52	2	7' – 3 1/4"
17	L2, L3, L14, L15 & L16 lintels	41 x 203 x 1.52	10	4' – 2 1/4"
18	L4 lintel	41 x 203 x 1.52	2	5' – 3 1/4"
19	L5, L6 & L7 lintels	41 x 203 x 1.52	6	2' – 1 1/4"
20	L8 lintel	41 x 203 x 1.52	2	3' – 2 1/4"
21	L9, L11, L12 & L22 lintels	41 x 203 x 1.52	8	3' – 3 1/4"
22	L10, L13 & L21 lintels	41 x 203 x 1.52	6	4' – 3 1/4"
23	L17 & L18 lintels	41 x 203 x 1.52	4	2' – 8 1/4""
24	L19 & L20 lintels	41 x 203 x 1.52	4	2' – 5 1/4"
25	T1 trimmer joist track	30 x 203 x 1.22	1	12' – 0"
	Header & lintel track	30 x 203 x 1.22	4	12' – 0"
	Joist Track	30 x 203 x 1.22	35	12' – 0"
	Spare Joist Track	30 x 203 x 1.22	4	12' – 0"
	Total Joist Track	**30 x 203 x 1.22**	**44**	**12' – 0"**

6.6 Wall Studs

In load bearing walls, each stud end should bear on the web of the top and bottom track. Because of the 'in-line' framing requirement, wall studs should be ordered to the exact length to avoid the slight variances in length which might occur with field cutting. Cripple studs may not be subject to axial load and it is common practice to cut them to the required length in the field.

The size of wall stud was previously determined for the design house as 41 x 92 x 1.12 for all load bearing walls and the ground floor partitions. The non-load bearing walls on the second floor will use 32 x 92 x 0.46 LSF members.

6.6.1 Load Bearing Wall Stud Lengths

Determining the wall stud length for the 41 x 92 x 1.12 members begins with an examination of the elevation view of the design house provided at the end of Chapter 4. The distance from the top of the basement concrete floor to the top of the ground floor is 8' – 1". The distance from the top of the ground floor to the top of the second floor is 9' – 9". The distance from the top of the second floor to the top of the wood plate for the roof trusses is 8' – 0".

Four lengths of the 41 x 92 x 1.12 studs are required for the design house.

1. To frame the 2' x 4' support walls which support the ends of floor joists J9 in the sunken laundry room.

   The architect has specified that the top of the floor in the sunken laundry be one riser (7 7/8") lower than the main floor. Therefore, the length of the studs in the 2' x 4' wall in the basement is 8' – 1" (top of slab to top of ground floor), less one riser (7 7/8") and the thickness of the subfloor and floor joist. Referring to Chapter 4 - Figure 4.5A, the subfloor is 5/8" thick and the floor joist is 8" deep.

   Therefore, the length of these wall studs is 6' – 8 1/2".

2. To frame the north and east exterior walls of the sunken laundry room on the ground floor.

   The exterior wall studs in the sunken laundry room bear directly on the 2 x 4 sill plate on the foundation wall (see Chapter 4 - Figure 4.5A Detail "A"). Therefore, they are 8 5/8" (the depth of the joist plus the thickness of the subfloor) longer than the other studs on the ground floor.

   Therefore, their length is 9' - 0 3/8" plus 8 5/8" or 9' - 9".

3. To frame the remainder of the exterior walls and the partitions on the ground floor.

   Referring to Chapter 4 - Figure 4.5A, the distance from the top of the second floor to the top of the ground floor wall is 8 5/8" (5/8" subfloor plus 8" deep joist). The bottom of the ground floor wall stud is level with the top of the ground floor subfloor.

   Therefore, the length of the ground floor studs (except in the exterior walls of the sunken laundry) is 9' - 9" minus 8 5/8" or 9' - 0 3/8".

4. To frame the exterior walls on the second floor.

   As shown in Chapter 4 - Figure 4.5B, the distance from the top of the wood plate for the second floor roof trusses to the top of the second floor stud wall is the thickness of two wooden 2 x 4's (3 1/4"). Referring to Chapter 4 - Figure 4.5A, the bottom of the second floor stud is at the level of the top of the second floor.

   Therefore, the second floor exterior load bearing stud wall is 8' – 0" minus 3 1/4" or 7' - 8 3/4" high.

6.6.2 Non-Load Bearing Wall Stud Lengths

The partitions on the second floor are all non-load bearing and are the same height as the exterior walls on the second floor (7' – 8 3/4") plus the thickness of the double wooden top plate (3 1/4") for a total height of 8' – 0".

These non-load bearing walls will not only require track sections at the top and bottom of the wall, they will also require a deflection track that is attached to the ceiling joists (or bottom chord of the roof trusses). The deflection track accommodates the vertical movement of the roof framing members throughout the year.

6.6.3 Length of Walls

The length of the basement wall and ground floor load bearing exterior walls and the ground floor load bearing partition walls are shown in Table 6.12. The length of the second floor exterior walls (load bearing) and the second floor partition walls (non-load bearing) are shown in Table 6.13.

Table 6.12: Basement and Ground Floor Wall Length

Description	Wall Height (ft' – in")	Wall Length (ft' – in")	Total Wall Length (ft' – in")
Basement Load Bearing Wall			
Walls supporting J9 under laundry room	6' – 8 1/2"	8' – 9"	17' – 6"
Ground Floor Load Bearing and Partition Walls			
North exterior walls	9' – 0 3/8"	31' – 0 1/2"	
East exterior walls (except sunken laundry)		33' – 0"	
South exterior wall		39' – 8"	
West exterior wall		39' – 9"	
N-S Partition wall (L11/H2)		20' – 5 1/2"	
E-W Partition wall (L12/L13)		22' – 6"	
Partition walls (sunken laundry/family room & cupboard)		19' – 1 1/2"	
Partition walls (powder room)		12' – 10"	
Partition wall (dining room/living room)		11' – 5 1/2"	
Partition walls (dining room/stairwell)		12' – 4"	
Partition walls (hall/stairwell)		5' – 3"	247' – 5"
Ground Floor Load Bearing Walls (sunken Laundry Room)			
East exterior wall (sunken laundry room)	9' – 9"	6' – 9"	
North exterior wall (sunken laundry room)		8' – 7 1/2"	15' – 4 1/2"

Table 6.13: Second Floor Wall Length

Description	Wall Height (ft' – in")	Wall Length (ft' – in")	Total Wall Length (ft' – in")
Second Floor Load Bearing Walls			
North exterior walls	7' – 8 3/4"	39' – 8 3/4"	
East exterior walls		34' – 1 1/2"	
South exterior wall		39' – 8 3/4"	
West exterior wall		34' – 1 1/2"	147' – 8 1/2"
Second Floor Non-Load Bearing Partition Walls (N-S orientation)			
Ensuite/Master Bedroom	8' – 0"	10' – 0 3/8"	
Master Bedroom Closet		7' – 0"	
Bedroom 2		10' – 8"	
Bedroom 2 Closet		7' – 2"	
Bedroom 3/Bathroom		11' – 6 3/4"	
Bathroom/Bedroom 4		11' – 6 3/4"	
Bedroom/Hall		1' – 11"	
Second Floor Non-Load Bearing Partition Walls (E-W orientation)			
Ensuite	8' – 0"	6' – 8"	
Ensuite/Bedroom 2		12' – 3"	
Bedroom 2/Bedroom 3		12' – 3"	
Bathroom		12' – 7"	
Bedroom 4		10' – 0"	
Master Bedroom/Hall		14' – 6"	
Master Bedroom Closet		7' – 0"	135' - 1 7/8"

6.6.4 Number of Wall Studs

When determining the number of wall studs, it is not necessary to do an exact estimate. It is very important however, that the designer, estimator, and framer are consistent with their approach to residential steel framing design and construction techniques. Divide the wall length by the stud spacing to obtain the number of stud spaces, then add one stud to derive the base number of studs. This quantity is increased by 5% - 10% to provide enough studs for the following:

- one extra stud at each corner;
- king studs at door, window, and wall openings;
- studs for lintel heads and sills (the example house requires studs in the head sill and window sill of lintel L1);
- studs for blocking at intersecting walls;
- cripple studs at door and window openings;
- studs to temporarily brace the walls during construction.

Allowing for a 5% - 10% overage, the number of studs is calculated as shown in Table 6.14. The load bearing studs are all 41 x 92 x 1.12 as determined in Chapter 4. The non-load bearing studs are 32 x 92 x 0.46 to provide the nominal 4-inch walls.

Table 6.14: Number of Wall Studs

Stud Length Stud Type	Length of Walls (feet)	Number of Spaces (16" o/c)	Base Number of Studs	5% Overage	10% Overage
6' – 8 1/2" Load Bearing 41 x 92 x 1.12	18'	14	15	16	17
9' – 0 3/8" Load Bearing 41 x 92 x 1.12	248'	186	187	197	206
9' – 9" Load Bearing 41 x 92 x 1.12	16'	12	13	14	15
7' – 8 3/4" Load Bearing 41 x 92 x 1.12	148'	111	112	118	124
8' – 0" Non-load Bearing 32 x 92 x 0.46	135'	102	103	109	114

6.6.5 Jack Studs for Lintels

Lintels L1 to L22 are all 8 in (203 mm) deep and they are placed directly into the top track as shown in Chapter 4 - Figure 4.5A. Therefore, the jack studs are 8 in (203 mm) shorter than the king studs and wall studs.

The jack studs for lintels L1 to L8 and L10 to L13 on the ground floor have a length of 9' – 0 3/8" minus 8" or 8' – 4 3/8". The jack studs for lintel L9 in the sunken laundry room on the ground floor are 9' – 9" minus 8" or 9' - 1". The jack studs for lintels L14 to L22 on the second floor are 7' – 8 3/4" minus 8" or 7' – 0 3/4".

Each of the twenty-two lintels requires two jack studs made from 41 x 92 x 1.12 LSF. Because the number of lintels and hence, the number of jack studs is known, extra jack studs are not required. If one or more are damaged, they can always be field-cut from the spare wall stud material. The jack stud requirements are summarized in Table 6.15 below:

Table 6.15: Number of Jack Studs

Lintel Designation	Length of Jack Stud (ft' – in")	Number of Jack Studs
L1 to L8, L10 to L13	8' – 4 3/8"	24
L9	9' – 1"	2
L14 to L22	7' – 0 3/4"	18

6.6.6 Cut-List: Floor Joists, Headers, Lintels, Joist Track, Wall Studs and Jack Studs

Having determined the LSF member requirements for the wall studs and jack studs, the Cut-List is expanded to include them as seen in Table 6.16 The wall studs are separated into the four different lengths and numbered items 27 though 31 and are shown assuming 10% overage. The three lengths for jack studs result in items 32 to 34.

Table 6.16: Preliminary Cut-List: Floor Joists, Headers, Lintels, Joist Track, Wall Studs and Jack Studs

Item Number	Description	Size	Quantity	Ordered Length (ft' – in")
1	J1 floor joists	41 x 203 x 1.22	19	12' – 2 3/8"
2	J2A, J7 floor joists	41 x 203 x 1.22	37	12' – 6 3/8"
3	J2B floor joists	41 x 203 x 1.22	6	12' - 4 3/4"
4	J5, J6, J18, T1 floor joists	41 x 203 x 1.22	21	10' – 0"
5	J9, J3, J4, J8 floor joists	41 x 203 x 1.22	31	6' - 4 3/4"
6	J10, J19 floor joists	41 x 203 x 1.22	26	12' – 11 3/4"
7	J11, J13 floor joists	41 x 203 x 1.22	21	12' – 6"
8	J12 floor joists	41 x 203 x 1.22	6	12' - 10 7/8"
9	J14 floor joists	41 x 203 x 1.22	4	12' – 5 1/4"
10	J15 floor joists	41 x 203 x 1.22	10	15' – 4 1/4"
11	J17, J16, 2 spare floor joists	41 x 203 x 1.22	10	21' - 11 1/8"
12	ladder joists	41 x 203 x 1.22	22	1' – 4"
13	H1 header	41 x 203 x 1.22	1	3' – 10"
14	H2 header	41 x 203 x 1.22	1	3' – 2"
15	H3 header	41 x 203 x 1.22	1	8' – 11"
16	L1 lintel	41 x 203 x 1.52	2	7' – 3 1/4"
17	L2, L3, L14, L15 & L16 lintels	41 x 203 x 1.52	10	4' – 2 1/4"
18	L4 lintel	41 x 203 x 1.52	2	5' – 3 1/4"
19	L5, L6 & L7 lintels	41 x 203 x 1.52	6	2' – 1 1/4"
20	L8 lintel	41 x 203 x 1.52	2	3' – 2 1/4"
21	L9, L11, L12 & L22 lintels	41 x 203 x 1.52	8	3' – 3 1/4"
22	L10, L13 & L21 lintels	41 x 203 x 1.52	6	4' – 3 1/4"
23	L17 & L18 lintels	41 x 203 x 1.52	4	2' – 8 1/4"
24	L19 & L20 lintels	41 x 203 x 1.52	4	2' – 5 1/4"
25	T1 trimmer joist track	30 x 203 x 1.22	1	12' – 0"
	Header & lintel track	30 x 203 x 1.22	4	12' – 0"
	Joist Track	30 x 203 x 1.22	35	12' – 0"
	Spare Joist Track	30 x 203 x 1.22	4	12' – 0"
	Total Joist Track	**30 x 203 x 1.22**	**44**	**12' – 0"**
26	Load bearing wall studs	41 x 92 x 1.12	17	6' – 8 1/2"
27	Load bearing wall studs	41 x 92 x 1.12	206	9' – 0 3/8"
28	Load bearing wall studs	41 x 92 x 1.12	15	9' – 9"
29	Load bearing wall studs	41 x 92 x 1.12	124	7' – 8 3/4"
30	Non-Load bearing wall studs	32 x 92 x 0.46	114	8' – 0"
31	Jack studs (L1-L8, L10-L13)	41 x 92 x 1.12	24	8' – 4 3/8"
32	Jack studs (L9)	41 x 92 x 1.12	2	9' – 1"
33	Jack studs (L14-L22)	41 x 92 x 1.12	18	7' – 0 3/4"

6.7 Stud Track

The track sections for the stud walls can be ordered in a variety of lengths. The longer lengths will require special handling to avoid damage, but will save some assembly time by reducing the number of splices needed on the longer walls. For the purposes of this Cut-List and the design house, 20 foot lengths of stud track will be ordered for the design house. Two track sections spliced together will extend the full length of the west and south walls.

To keep the estimating and the Cut-List simple, track sections will be ordered in the same 20 foot lengths for the remaining walls and field-cut. Once the total length of track is estimated for the walls, extra will be ordered for assembling head sills, window sills and all the rough openings. This will be estimated using the perimeter of the rough openings shown in Chapter 4 Table 4.3. Finally an additional 10% overage will be added.

6.7.1 Load Bearing Wall Track

Each wall requires a top and bottom track (30 x 92 x 1.12). Referring back to Tables 6.12 and 6.13, it can be seen that the basement and ground floor walls will require a total track length of approximately (272' x 2) = 544'. Twenty-eight 20 foot sections of wall track are required for these walls.

The second floor load bearing walls require a total track length of approximately (148' x 2) = 296'. Fifteen 20 foot sections of wall track are required for these walls.

Track section is also required for most window, door and wall openings. Each opening may not require track on its entire perimeter and an extremely detailed estimate could be attempted to deal with these framing details. It is sufficient however to estimate track for rough openings by simply calculating the entire perimeter of each opening. This will undoubtedly over-estimate the amount of track section, but any extra track can be used for blocking between wall studs for bracing and intersecting walls as seen in CSSBI *RSFIM Figure 6.3.2a*.

The dimensions of the wall openings were given in Chapter 4 Table 4.3 as a *width x height* measurement in inches. The total perimeter of these openings is calculated to be 387' – 7". Twenty 20 foot sections of load bearing wall track are required for these openings.

The total number of 20 foot sections of wall track (30 x 92 x 1.12) is therefore (28 + 15 + 20) = 63 lengths. Increasing this amount by 10% brings the total load bearing track to sixty-nine 20 foot lengths.

6.7.2 Non-load Bearing Wall Track

Table 6.13 indicates the total length of non-load bearing wall is 135' - 1 7/8". These second floor partition walls will require a total track length of approximately (136' x 2) = 272'. Fourteen 20 foot sections are needed. Increasing this amount by 10% brings the total non-load bearing track (30 x 92 x 0.46) to sixteen 20 foot lengths.

6.7.3 Cut-List: Floor Joists, Headers, Lintels, Joist Track, Wall Studs, Jack Studs, and Stud Track

Having determined the LSF member requirements for the stud track, the Cut-List is expanded to include them as seen in Table 6.17. Wall track is separated into load bearing (item 35), non-load bearing (item 36), and deflection track (item 36A).

Table 6.17: Preliminary Cut-List: Floor Joists, Headers, Lintels, Joist Track, Wall Studs, Jack Studs, and Stud Track

Item Number	Description	Size	Quantity	Ordered Length (ft' – in")
1	J1 floor joists	41 x 203 x 1.22	19	12' – 2 3/8"
2	J2A, J7 floor joists	41 x 203 x 1.22	37	12' – 6 3/8"
3	J2B floor joists	41 x 203 x 1.22	6	12' - 4 3/4"
4	J5, J6, J18, T1 floor joists	41 x 203 x 1.22	21	10' – 0"
5	J9, J3, J4, J8 floor joists	41 x 203 x 1.22	31	6' – 4 3/4"
6	J10, J19 floor joists	41 x 203 x 1.22	26	12' – 11 3/4"
7	J11, J13 floor joists	41 x 203 x 1.22	21	12' – 6"
8	J12 floor joists	41 x 203 x 1.22	6	12' - 10 7/8"
9	J14 floor joists	41 x 203 x 1.22	4	12' – 5 1/4"
10	J15 floor joists	41 x 203 x 1.22	10	15' – 4 1/4"
11	J17, J16, 2 spare floor joists	41 x 203 x 1.22	10	21' - 11 1/8"
12	ladder joists	41 x 203 x 1.22	22	1' – 4"
13	H1 header	41 x 203 x 1.22	1	3' – 10"
14	H2 header	41 x 203 x 1.22	1	3' – 2"
15	H3 header	41 x 203 x 1.22	1	8' – 11"
16	L1 lintel	41 x 203 x 1.52	2	7' – 3 1/4"
17	L2, L3, L14, L15 & L16 lintels	41 x 203 x 1.52	10	4' – 2 1/4"
18	L4 lintel	41 x 203 x 1.52	2	5' – 3 1/4"
19	L5, L6 & L7 lintels	41 x 203 x 1.52	6	2' – 1 1/4"
20	L8 lintel	41 x 203 x 1.52	2	3' – 2 1/4"
21	L9, L11, L12 & L22 lintels	41 x 203 x 1.52	8	3' – 3 1/4"
22	L10, L13 & L21 lintels	41 x 203 x 1.52	6	4' – 3 1/4"
23	L17 & L18 lintels	41 x 203 x 1.52	4	2' – 8 1/4"
24	L19 & L20 lintels	41 x 203 x 1.52	4	2' – 5 1/4"
25	T1 trimmer joist track	30 x 203 x 1.22	1	12' – 0"
	Header & lintel track	30 x 203 x 1.22	4	12' – 0"
	Joist Track	30 x 203 x 1.22	35	12' – 0"
	Spare Joist Track	30 x 203 x 1.22	4	12' – 0"
	Total Joist Track	**30 x 203 x 1.22**	**44**	**12' – 0"**
26	Load bearing wall studs	41 x 92 x 1.12	17	6' – 8 1/2"
27	Load bearing wall studs	41 x 92 x 1.12	206	9' – 0 3/8"
28	Load bearing wall studs	41 x 92 x 1.12	15	9' – 9"
29	Load bearing wall studs	41 x 92 x 1.12	124	7' – 8 3/4"
30	Non-Load bearing wall studs	32 x 92 x 0.46	114	8' – 0"
31	Jack studs (L1-L8, L10-L13)	41 x 92 x 1.12	24	8' – 4 3/8"
32	Jack studs (L9)	41 x 92 x 1.12	2	9' – 1"
33	Jack studs (L14-L22)	41 x 92 x 1.12	18	7' – 0 3/4"
34	Load bearing track	30 x 92 x 1.12	69	20' – 0"
35	Non-load bearing track	30 x 92 x 0.46	16	20' – 0"

6.8 Garage LSF Members

6.8.1 Garage Ceiling Joists

The garage ceiling joists (41 x 203 x 1.22) span from the outside edge to outside edge of the 6 inch concrete block walls. This distance is 20' – 0" (Chapter 4 - Figure 4.2) minus 10" (Chapter 4 - Figure 4.4) or 19' - 2". The garage is 21' - 6" long. Therefore, with the ceiling joists spaced 24" o/c, twelve ceiling joists are required. One additional joist is ordered for the horizontal of the triangular frame over the north-west garage wall. (see Garage Rafter section below). The thirteen joists are entered on the Cut-List as item 37.

6.8.2 Garage Ridge Assembly

The length from the east edge of the garage to the brick on the east edge of the house is 19' - 9". The ridge assembly is ordered this length. The ridge assembly consists of one joist 41 x 254 x 1.52 and one track 30 x 254 x 1.52. They are entered on the Cut-List as items 38 and 39.

6.8.3 Garage Roof Rafters

Two roof rafters are required for each of the twelve ceiling joists, twenty-four in total. One extra rafter will be ordered to cut in the field to frame over the north-west wall of the garage which protrudes beyond the east wall of the house. It will be cut to form the vertical and diagonal of a triangular frame over the north-west block wall of the garage.

The distance from the centre of the garage to the outside edge of the 6 inch block wall is 9' - 7". The roof overhang is 15" beyond the block wall and the ridge assembly is 1 5/8" wide. Therefore, the horizontal distance from the tail of the rafter to the edge of the ridge member is:

- 9' - 7" (centre line of garage to outside face of block wall)
- plus 15" (roof overhang)
- less 13/16" (half width of ridge assembly)
- equalling 10' - 9 3/16" (or 10.766 feet)

With a roof slope of 9:12 (36.87°) the length of the rafter from the tail to the ridge is 17' - 11 1/2" (10.766 feet divided by sin 36.87°). The rafters are entered on the Cut-List as item 40.

6.8 The Final Cut-List

The final Cut-List showing all framing members is seen in Table 6.18. Note that there is no listing of any accessories such as fasteners, bracing, clip angles and other framing materials.

Table 6.18: Final Cut-List: Floor Joists, Headers, Lintels, Joist Track, Wall Studs, Jack Studs, Stud Track, Garage LSF Members

Item Number	Description	Size	Quantity	Ordered Length (ft' – in")
1	J1 floor joists	41 x 203 x 1.22	19	12' - 2 7/8"
2	J2A, J7 floor joists	41 x 203 x 1.22	36	12' - 5 7/8"
3	J2B floor joists	41 x 203 x 1.22	6	12' - 3 3/4"
4	J5, J6, J18, T1 floor joists	41 x 203 x 1.22	21	10' – 0"
5	J9, J3, J4, J8 floor joists	41 x 203 x 1.22	31	6' - 4 3/4"
6	J10, J19 floor joists	41 x 203 x 1.22	26	12' – 7"
7	J11, J13 floor joists	41 x 203 x 1.22	21	12' – 6"
8	J12 floor joists	41 x 203 x 1.22	6	12' - 10 1/8"
9	J14 floor joists	41 x 203 x 1.22	4	12' - 4 1/8"
10	J15 floor joists	41 x 203 x 1.22	10	15' - 3 1/8"
11	J17, J16, 2 spare floor joists	41 x 203 x 1.22	10	21' - 11 1/8"
12	ladder joists	41 x 203 x 1.22	22	1' – 4"
13	H1 header	41 x 203 x 1.22	1	4' – 4"
14	H2 header	41 x 203 x 1.22	1	3' – 11"
15	H3 header	41 x 203 x 1.22	1	9' – 8"
16	L1 lintel	41 x 203 x 1.52	2	8' – 0"
17	L2, L3, L14, L15 & L16 lintels	41 x 203 x 1.52	10	4' – 11"
18	L4 lintel	41 x 203 x 1.52	2	6' – 0"
19	L5, L6 & L7 lintels	41 x 203 x 1.52	6	2' – 10"
20	L8 lintel	41 x 203 x 1.52	2	3' – 11"
21	L9, L11, L12 & L22 lintels	41 x 203 x 1.52	8	4' – 0"
22	L10, L13 & L21 lintels	41 x 203 x 1.52	6	5' – 0"
23	L17 & L18 lintels	41 x 203 x 1.52	4	3' – 5"
24	L19 & L20 lintels	41 x 203 x 1.52	4	3' – 2"
25	T1 trimmer joist track	30 x 203 x 1.22	1	12' – 0"
	Header & lintel track	30 x 203 x 1.22	4	12' – 0"
	Joist Track	30 x 203 x 1.22	35	12' – 0"
	Spare Joist Track	30 x 203 x 1.22	4	12' – 0"
	Total Joist Track	**30 x 203 x 1.22**	**44**	**12' – 0"**
26	Load bearing wall studs	41 x 92 x 1.12	17	6' – 8 1/2"
27	Load bearing wall studs	41 x 92 x 1.12	206	9' – 0 3/8"
28	Load bearing wall studs	41 x 92 x 1.12	15	9' – 9"
29	Load bearing wall studs	41 x 92 x 1.12	124	7' – 8 3/4"
30	Non-Load bearing wall studs	32 x 92 x 0.46	114	8' – 0"
31	Jack studs (L1-L8, L10-L13)	41 x 92 x 1.12	24	8' – 4 3/8"
32	Jack studs (L9)	41 x 92 x 1.12	2	9' – 1"
33	Jack studs (L14-L22)	41 x 92 x 1.12	18	7' – 0 3/4"
34	Load bearing track	30 x 92 x 1.12	69	20' – 0"
35	Non-load bearing track	30 x 92 x 0.46	16	20' – 0"
36	Garage ceiling joists	41 x 203 x 1.22	13	19' – 2"
37	Garage ridge joist	41 x 254 x 1.52	1	19' – 9"
38	Garage ridge track	30 x 254 x 1.52	1	19' – 9"
39	Garage roof rafters*	41 x 254 x 1.52	25	17' – 11 1/2"

* Parallel end cuts @ 9:12

7. TOOLS

Chapter Objective

The purpose of this chapter is to introduce the student to the common and specialized tools that are required for residential steel framing projects, and to train the students in the correct use of these tools.

The student will learn how to select and use the proper fastening, bending and cutting tools that are commercially available for steel framing. Instruction and safety precautions will be practiced using screwguns, snips, shears, hole punches and chop saws. The material in this chapter should be delivered in conjunction with *Chapter 8 Fasteners* due to the similiarity of the topics covered.

Specific Learning Objectives

After completing this chapter, the student should be able to:

Objective 7.1: Compile a list containing the basic power and hand tools that would be required for a residential steel framing project.

Objective 7.2: State the various ways in which steel-to-steel and steel-to-sheathing/drywall connections can be made including:

- Screwing
- Nailing or pinning
- Clinching
- Welding

Objective 7.3: Recognize the differences between screwguns and drills and state why screwguns must be used for residential steel framing.

Objective 7.4: Demonstrate the ability to select and use an appropriate screwgun for various fastening tasks. This demonstration should address the following:

- Identify the correct grade, amperage, and speed screwgun to use;
- Recognize the difference between a drywall screwgun and an adjustable clutch screwgun;
- Properly hold and operate a screwgun to make tight, proper steel-to-steel connections and to attach sheathing and drywall to steel framing.
- Recognize the advantages of a cordless screwgun.

Objective 7.5: Demonstrate the ability to select and use the correct bit tip holders, bit tips, and drivers for a variety of steel framing tasks.

Objective 7.6: Recognize the different collated attachments available for screwguns.

Objective 7.7: State the various ways in which steel framing members and flat stock can be cut including:

- Portable hydraulic shears
- Electric shears/nibblers
- Aviation snips
- Chop saws
- Circular saws
- Plasma cutters
- Manual hole punch

Objective 7.8: Demonstrate the proper technique for cutting steel framing members and flat stock using the following techniques:

- Electric shears/nibblers
- Aviation snips
- Chop saws
- Circular saws

Objective 7.9: Describe the various ways that are used to bend steel framing material including:

- Press braking
- Hand seamers
- Track Bender

Objective 7.10: Demonstrate the ability to properly select and use the following steel framing hand tools and accessories:

- hand seamers
- C-clamps;
- Bar clamps;
- Magnetic level;
- Speed square;
- Bull nose pliers;
- Smooth-faced drywall ax and hammer;
- Tape measure;
- Felt tip markers;
- Tool pouch.

Suggested Activities

The recommended format of training is classroom instruction and demonstration with hands-on practice for the use of the tools.

The instructor will need to be familiar with the correct operation and function of each hand and power tool. Sufficient tools will be needed such that all the students can practice with a variety of power tools. Do not depend on the students to bring the right tools to the class. Request the students to bring their own tool pouch, tape measure, and hammer or drywall ax.

Demonstrate the use of each tool and give the students enough opportunity to become proficient with using them. Time should be taken to demonstrate the correct use of the screwgun, including how to:

- properly hold a screwgun;
- feather a screw;
- drive the screw;
- use the reverse switch and remove a screw;
- adjust the clutch;
- regulate the speed;
- use the quick release to exchange bit tips;
- use the nosepiece on a drywall screwgun.

For the bit tip holders, show how to clean out the hex drive when it gets clogged with filings. Demonstrate the use of a collated screwgun or arrange for a guest speaker from one of the manufacturers or contractors to come into the class and show the students how it works.

Demonstrate the use of a nail gun and the correct application. Discuss clinching and welding and if possible, provide a demonstration of these techniques for fastening steel. Discuss the advantages and disadvantages of the various fastening systems, making sure you involve any students who have worked in steel framing.

Discuss the different methods of cutting steel and show the correct use of electric shears, aviation snips, chop saw, and circular saw.

Have class discussion and demonstrations around the different methods of bending steel, including the press brake and hand seamers. The students will have to use the hand seamers during the hands-on sessions when floors and walls are laid out and assembled. Show how C-clamps are used and discuss the different sizes and their applications. Demonstrate the bar clamps and their use in assembling headers. Describe how magnetic levels, speed squares, felt tip markers, and bull-nose pliers are used. Have the students use all of the tools as much as possible during the hands-on sessions.

Materials and Equipment

Tools required for the instruction in this chapter and for the framing portion of the course are summarized in the table below. Refer to the summary table at the end of this chapter for a sample list of makes and models.

Item	Quantity
Adjustable clutch screwguns	6
Drywall screwguns	4
Cordless screwgun	2
Magnetic bit tip holder	14
No. 2 Phillips bit tips	36
5/16–inch magnetic hex driver, 2 inches long	14
Collated attachment on a screwgun (optional – demonstration purposes)	1
Pneumatic nail gun for steel framing	2
6R locking C clamps	24
11R locking C clamps	12
18R locking C clamps	2
Bar clamp with 5 1/2–inch jaw depth	4
Aviation snips—left cut	12
Aviation snips—right cut	4
Aviation snips—straight cut	4
14 gauge swivel head electric shear	4
14 inch chop saw and blades	1
3 1/2–inch hand seamers	4
Bull nose pliers	12
Magnetic levels	2
Felt tip markers, red and black	12 each
Tape measures, 30 ft (9 m)	4
Speed squares	12
Utility knives	4
Exterior, grounded extension cords, 50–foot	12
Exterior, grounded extension cords, 100–foot	4

This can be a very expensive collection of tools to obtain. Assistance may be available from different tool distributors. Companies frequently donate or provide tools at a discount to a training facility so that students may be exposed to their brand of tools. Call local tool distributors to find out if any discounts or donations may be available.

Optional Items	Quantity
Clinching device	1
MIG welder	1
Circular saw with metal cutting blade	1
Plasma cutter	1
Portable hydraulic shear	1
Press brake	1
Electric drill (to demonstrate difference from a screwgun)	1
Air compressor (portable)	1
Manual Hole Punch	1
Track Bender	1

7. TOOLS

7.1 Introduction

The layout and assembly procedures used in residential steel framing are similar to those used with wood, although a number of different tools and accessories are needed. Before beginning any steel framing project, the correct tools should be available and the workers should have proper training in their use.

This chapter discusses the different types of fastening, cutting, bending, and miscellaneous power and hand tools required for steel framing. This chapter is divided into the following sections:

Section 7.2: Fastening Techniques
Section 7.3: Screwguns
Section 7.4: Cutting Tools
Section 7.5: Bending Steel
Section 7.6: Miscellaneous Tools and Accessories

The purpose of this chapter is to identify the correct tools to use on residential steel framing projects and to train the students in the correct use of these tools.

7.2 Fastening Techniques

Fastening steel to steel can be accomplished by screwing, nailing, pinning, clinching, and welding. The most common fastener used in residential steel framing is the screw.

7.2.1 Screwing

The **screwgun** is the primary tool used on every residential steel framing job site. Screwguns use **screws** to connect steel members to one another, and to connect sheathing material such as plywood, OSB, and drywall to steel. Screwguns are discussed in greater detail in Section 7.3 of this chapter. A discussion surrounding the many types and specifications for use of screws is provided in *Chapter 8 Fasteners*.

7.2.2 Nailing and Pinning

Nail guns are commonly used in steel framing to attach plywood, OSB, or other types of sheathing to walls, floors and roofs. Air pressure on the nailer may need to be adjusted when different thicknesses of steel are used to completely drive the **nail** (or **pin**).

Some contractors use only nails (or pins) to attach sheathing, while others use screws around the perimeter of each piece of sheathing and nails in the inner area especially in cyclic wind load and seismic zones. This latter method ensures that the sheathing is held tight against the steel framing while the nails are being applied, which is a requirement when using nails.

Nails can be successfully used for subfloor attachment, however it may result in squeaks caused by nails rubbing against the steel members. If nails are preferred for floor use, manufacturers should be consulted for the correct application. Adhesives may also be used in conjuction with fasteners to further reduce chances of squeaking.

Nail guns are currently being developed for steel-to-steel attachments. An example of a pneumatic nailgun is seen in Figure 7.1.

FIGURE 7.1 PNEUMATIC NAILGUN

7.2.3 Clinching

Clinching means to press form two or more layers of steel together to form a connection. Portable clinching tools are relatively new to the market and are currently receiving code approval. The cost of these tools vary in price. A more detailed description of clinching is provided in *Chapter 8 Fasteners.*

7.2.4 Welding

Welding cold formed steel is another method for fastening steel together. MIG welders are mainly used in a panelization operation. Welders must be certified. Zinc rich touch-up paint must be applied to the welded area to repair the galvanizing destroyed by the heat.

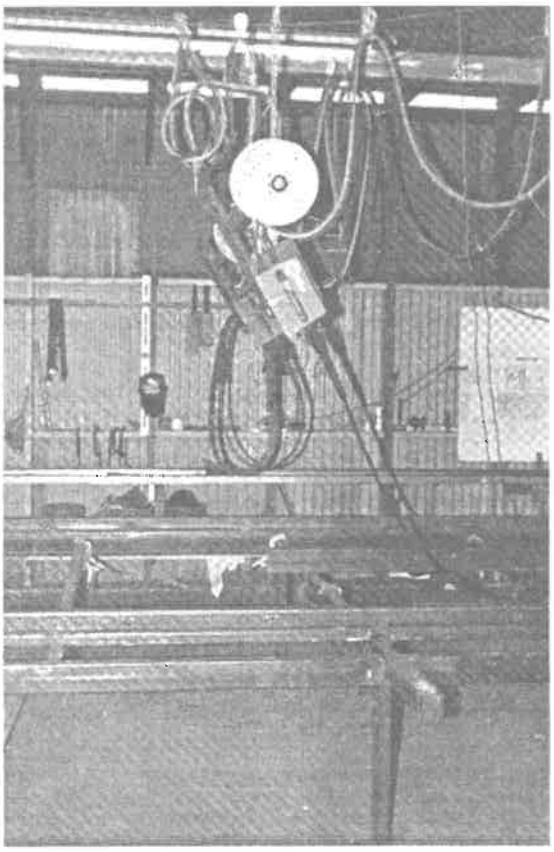

FIGURE 7.2 WELDING

7.3 Screwguns

Screwguns use screws to connect steel members to one another, and to connect sheathing material such as plywood, OSB, and drywall to steel.

7.3.1 Screwguns vs Drills

A **screwgun** is an **electric screwdriver**. Screwguns are not drills. Most importantly, they have the following benefits that are key to their use as a fastening tool:

- screws in a screwgun will only turn when pressure is applied against the screw tip;
- screws can be positioned on the bit tip while the screwgun motor is running;
- screwguns run at variable speeds, allowing the screw to penetrate the steel and engage the threads before the screw burns up.

FIGURE 7.3 USING A SCREWGUN

Electric drills and **drill motors** are not designed to apply screws into steel framing material because they do not have clutches and generally are not able to run at the correct rpm. They are not designed to properly hold the bit tips. Screws spin if the drill motor is running and this makes rapid screw attachment difficult and dangerous for the framer.

7.3.2 Grades of Screwguns

There are two grades of screwguns, home center and industrial grade. **Home center screwguns** are typically light duty models not made to withstand the demands of construction. **Industrial grade screwguns** are usually rated at 5–6 amps minimum and include a metal clutch housing.

A screwgun with a maximum 2,500 rpm rating is recommended for residential steel framing. The faster rpm screwguns tend to burn up screws before they penetrate through the steel.

Most industrial grade screwguns are purchased from a distributor specializing in power tools and are not typically sold at home renovation centers or outlet stores

7.3.3 Operating a Screwgun

The manufacturers contour screwguns to ergonomically fit the hand for faster and more efficient screw application. Hold the back of the screwgun firmly against the palm of the hand, with the top of the back nestled in the web of the hand between the thumb and the first finger as shown in Figure 7.3 and 7.4.

Do not hold the screwgun by the base of the handle. This type of handling will destabilize the screwgun and the screw may fall over. Apply pressure through the palm of the hand to drive the screw into the material. Squeeze the trigger using the third or fourth finger as the trigger finger.

FIGURE 7.4 HOLDING A SCREWGUN

Framers will soon learn that a specific amount of rpm and pressure is necessary to get the screw point to penetrate through all steel layers. If the screwgun is running at too high a speed, the tip of the screw may burn out before it penetrates the steel.

Start the screw slowly. Once the drill point penetrates the steel, increase the speed until the screw is firmly seated. Once the screw is seated, the screwgun should automatically stop spinning the screw and prevent the connection from stripping.

Beginners may experience difficulty operating screwguns. The skill required to start and seat the screws comes with practice. With further experience, framers will acquire the technique of using one hand to pull screws from the tool pouch and position them for quick attachment to the bit tip, and using the other hand to hold the screwgun and insert the screws. Like many other construction techniques, this takes practice and will eventually lead to greater productivity.

7.3.4 Adjustable Torque/Clutch Screwguns

The screwgun recommended for steel to steel connections should have an adjustable clutch and torque setting with a rpm range of 0–2,500. Workers are advised to always follow the screwgun manufacturer's recommendations.

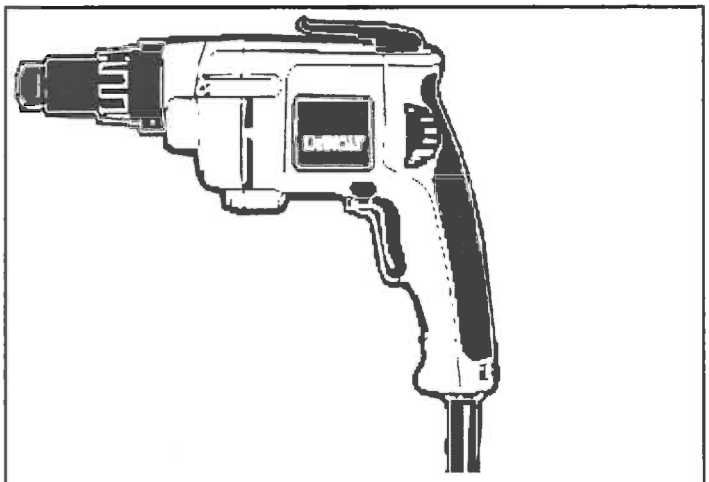

FIGURE 7.5 ADJUSTABLE TORQUE SCREWGUN

Avoid **over-torquing** (continuing to turn the screw after it is seated) the screws when attaching steel members together. Over-torquing causes screws and steel to "strip". If the connection is stripped, the screw will spin freely in the hole and the connection will not carry the loads it was designed to handle.

The **adjustable torque** feature automatically stops the screwgun from turning the screw and stripping the connection once the screw is properly

seated. Any good adjustable torque/clutch screwgun should have the following features:

- variable speed 0–2,500 rpm;
- reversible mode to remove screws when necessary;
- quick change bit chuck for holding bit tips, allowing quick changes between hex and Phillips tips (see *Chapter 8 Fasteners*).

7.3.5 Drywall Screwguns

The adjustable torque/clutch screwgun works well for framing, but it is not designed to attach sheathing or drywall to steel because of its slow operating speed and lack of a depth sensitive nose piece. For these applications, a **drywall screwgun** is recommended.

Drywall screwguns, especially the 4,000 rpm models, are not recommended for steel-to-steel connections. They do not have adjustable clutches to prevent screws from stripping and often burn up screws because they run at higher rpm's.

While attaching drywall or sheathing, it is better to leave the drywall screwgun running. The cooling system in the tool remains active and prevents overheating. In addition, the bit tip does not spin until pressure is applied, which allows screw loading while the screwgun is running.

FIGURE 7.6 DRYWALL SCREWGUN

A good drywall screwgun should have the following features:

- industrial strength rating;
- 5 amps minimum;
- 0–2,500 rpm for attaching sheathing and drywall to 0.033 in (0.84 mm) and thicker steel;
- 0–4,000 rpm for attaching sheathing and drywall to 0.018 in (0.46 mm) and 0.027 in (0.69 mm) material;
- reversible mode;
- removable, depth-sensitive nosepiece.

The depth-sensitive nosepiece controls the depth to which the screw is set by stopping the bit from spinning once that pre-set depth has been reached. This prevents the screw from breaking the skin of the sheathing or drywall. The warranty of the sheathing could be voided when the skin is broken because moisture can enter the material. Setting screws too deep may decrease the holding power of the screws and shear wall values.

7.3.6 Cordless Screwguns

Traditionally, **cordless screwguns** were limited by battery power. Today, most operate between 12 and 18.8 volts which improves the rpm (over 2000 rpm in some models). While cordless models are more expensive, they can save the framer valuable time by allowing them to move quicker and be more flexible by not having to worry about extension cords.

Cordless screwguns are useful for hard-to-reach places where extension cords can be cumbersome. They work well in locations where the framer needs to climb in and around the steel members where extension cords could easily get tangled or cut.

They are more expensive than conventional screwguns. The batteries need recharging so it is important to keep a spare battery and charger available and they operate at slower rpms. Cordless screwguns may not have enough power for all applications.

7.3.7 Bit Tip Holders

Bit tip holders are metal shafts that fit into the screwgun with a slot for the bit tip attachment. The majority of screws and bit tips used in steel framing are either hex head or Phillips head. A **hex head** screw uses a hex head driver. A **Phillips head** screw uses a Phillips head bit tip. These screw types are shown in Figure 7.7. Bit tip holders and drivers are often magnetized to hold the screws in place while driving. More information on screw types is presented *in Chapter 8 Fasteners.*

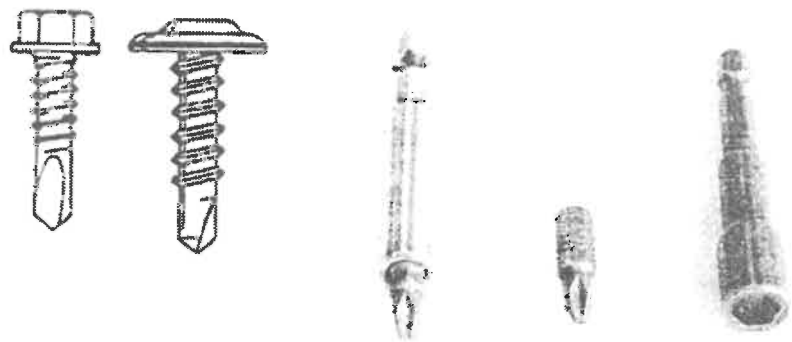

FIGURE 7.7 Hex head screw, Phillips head screw, Phillips bit tip holder, bit tip, hex driver

7.3.8 Collated Attachments

Collated attachments fit on screwguns and use strips of screws that automatically feather at the end of the bit tip. This frees the framer's hands up and increases productivity. Stand-up attachments are also available for the framer to remain standing when applying wall, roof and floor sheathing.

FIGURE 7.8 COLLATED SCREWGUN

7.4 Cutting Tools

There are many different methods available to the residential steel framer to cut the LSF members and other steel material. Steel cutting tools are not yet as fast and portable as the conventional wood cutting tools. Improved steel cutting tools are currently under development.

Steel can be precut (cut-to-length) for the framer by the manufacturer using a shear on the roll forming line, or by the distributor using a shear or a saw.

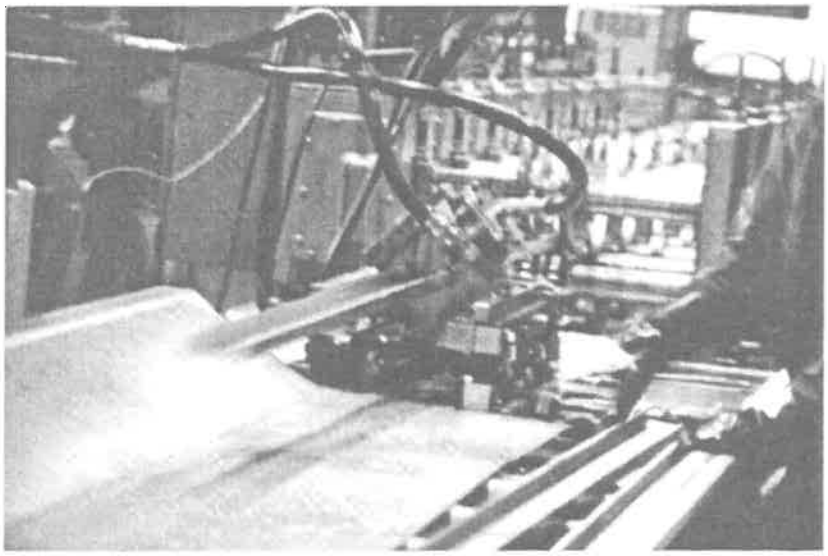

FIGURE 7.9 MANUFACTURER SHEAR

The framer may cut the steel at the job site using a variety of cutting tools that include:

- portable hydraulic shear;
- electric shears/nibblers
- aviation snips;
- chop saw;
- circular saw;
- plasma cutter;

The considerations for cut-to-length and field cutting were discussed in Chapter 5 Manufacturing Steel

7.4.1 Portable Hydraulic Shears

Portable hydraulic shears are not commonly used on the job site. They are usually found in panelization plants. The hydraulic shear is a sharp blade that cuts through the steel using a hydraulic force, producing a clean, straight cut.

7.4.2 Electric Shears/Nibblers

Electric shears and **nibblers** are electric powered hand tools that can cut thicknesses up to 0.068 in (1.73 mm) smoothly with no rough edges or burrs. They are easily portable from site to site. However, it is difficult to cut tight radii on C-section members, and the blades are expensive to replace.

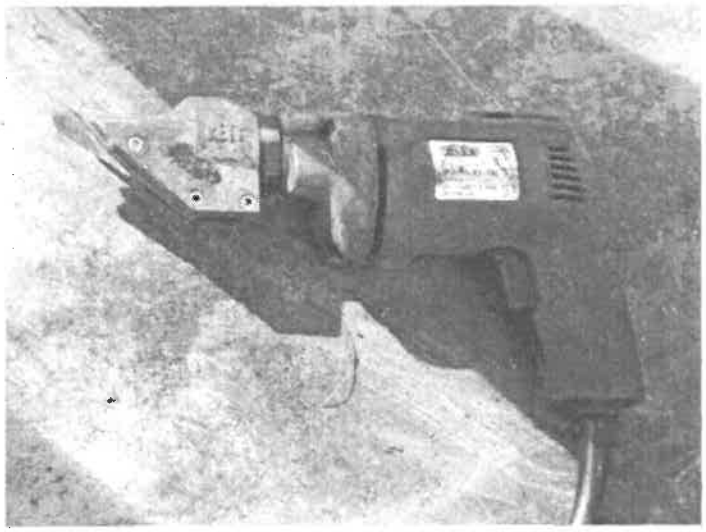

FIGURE 7.10 ELECTRIC SHEARS

7.4.3 Aviation Snips

Aviation snips are hand tools that cut steel thicknesses up to 0.043 in (1.09 mm). They are especially useful when cutting and coping steel flanges. They are good for snipping flanges and making other similar small cuts. Aviation snips are available in three different models:

- straight cuts: yellow-handled snips;
- right-handed users: red-handled snips for left cuts;
- left-handed users: green-handled snips for right cuts.

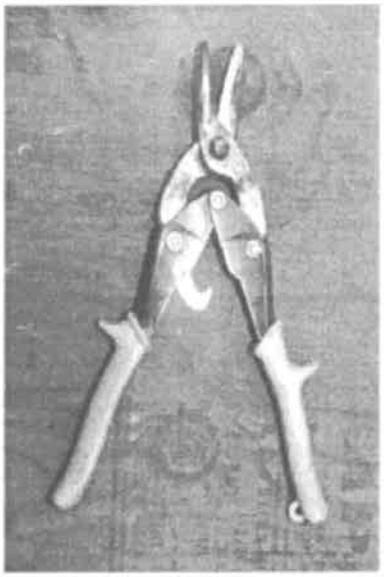

FIGURE 7.11 AVIATION SNIPS

7.4.4 Chop Saw

A **chop saw** uses an abrasive blade that cuts quickly through steel. It is very effective for square cuts and cutting bundled studs. However, it is very noisy and produces hot flying metal chips. The edge produced by a chop saw is very rough with sharp burrs. In harsh environments such as in the presence of water softening equipment this edge may need to be touched up with a zinc rich metallic coating.

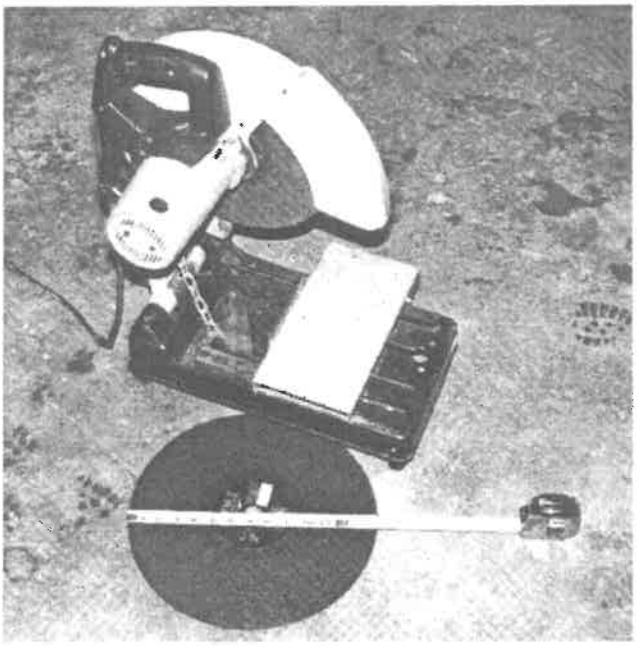

FIGURE 7.12 CHOP SAW AND BLADE

7.4.5 Circular Saw

Circular saws are extremely portable, but framers may experience difficulty finding a metal-cutting blade that cuts the steel cleanly and cost-efficiently. Carbide-tipped blades cut steel quickly but are more expensive than regular metal-cutting blades. Several different experimental blades are being developed for circular saws by manufacturers who sell tools for steel framing. Cost, safety, durability, and cutting ability are the important issues for these types of blades.

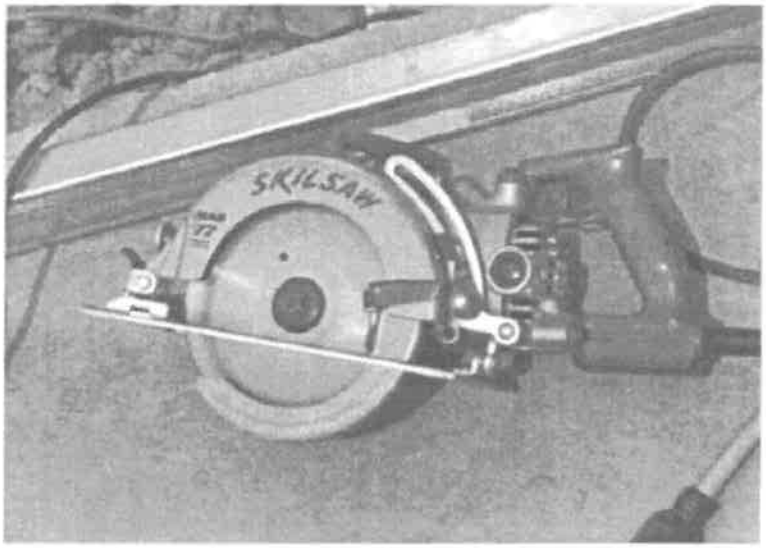

FIGURE 7.13 CIRCULAR SAW

7.4.6 Plasma Cutters

Plasma cutters produce an electric arc that melts through the steel. It cuts quickly but leaves jagged, burned edges. Plasma cutters are popular with plumbers because of their quick cutting capabilities.

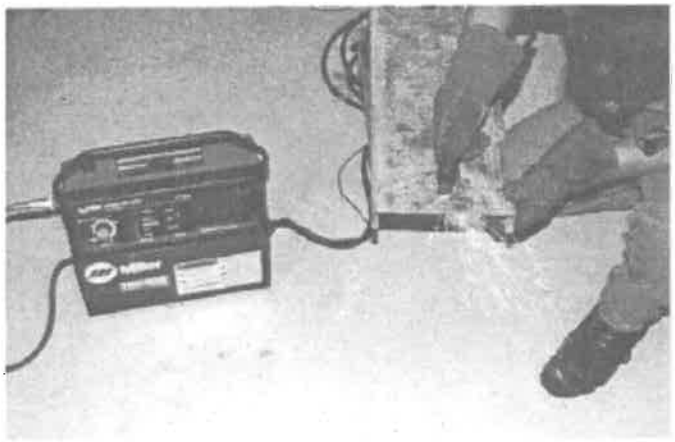

FIGURE 7.14 PLASMA CUTTER

7.4.7 Manual Hole Punch

Manual hole punches will easily cut through steel commonly used for residential steel framing. These tools are normally part of the plumber's and electrician's equipment. Further information and guidelines for making openings in the web of a LSF member is given in Chapter 19 Section 19.3.

FIGURE 7.15 MANUAL HOLE PUNCH

7.5 Bending Steel

Occasionally framers and other tradesmen will need to bend steel webs and flanges for connections, and flat stock to use as fascia, ridge cap, or for other applications. Pieces like the fascia and ridge cap will need to be bent to match the pitch of the roof. Steel can be bent using press brakes or hand seamers.

7.5.1 Press Brake

These are machines that can bend lengths of steel up to 10 feet. It is often cost-effective for contractors who bend a lot of steel to purchase their own **press brake**.

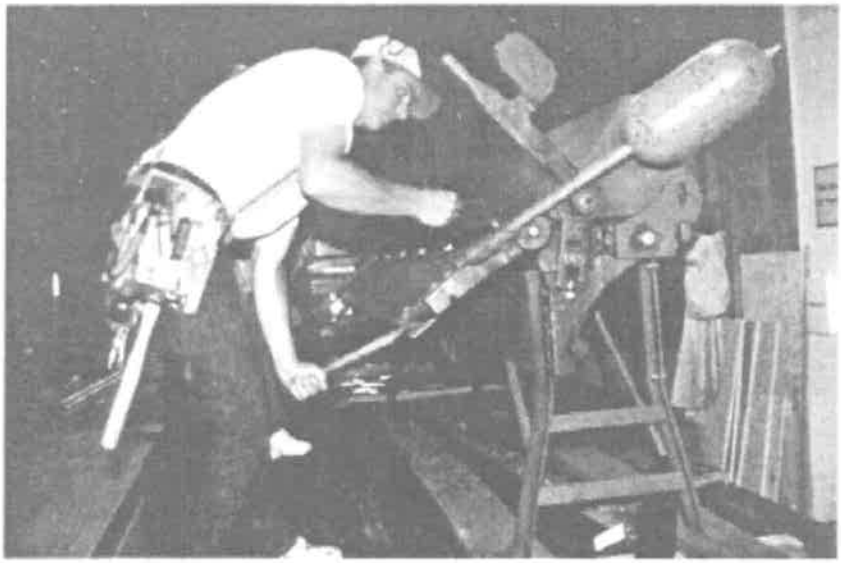

FIGURE 7.16 PRESS BRAKE

7.5.2 Hand Seamer

Hand seamers are used for small bends. These tools are often called "duck-billed pliers" because of the 3 -1/2 in (89 mm) flat jaw. Hand seamers are useful for bending steel web or flanges around window sills and door openings and wherever else bends are needed to make steel-to-steel connections.

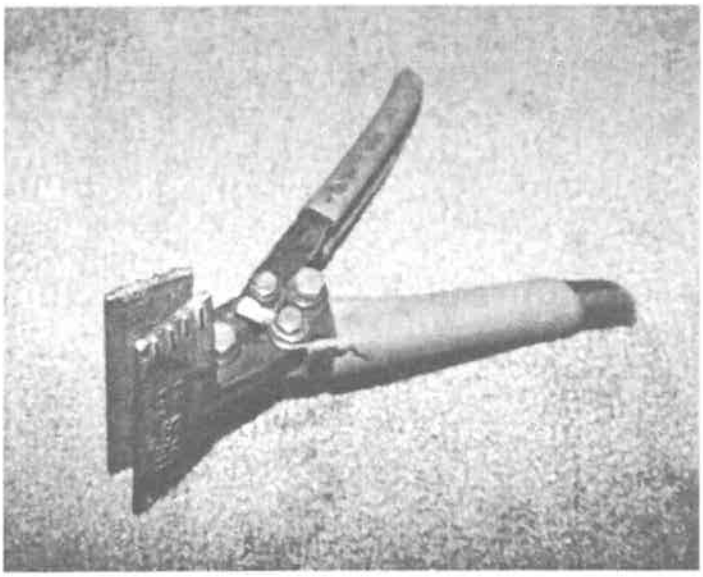

FIGURE 7.17 HAND SEAMERS

7.5.3 Track Benders

A manually operated tool is available from Townsend Technologies in Maine, USA that will bend a wall and joist track (3 –5/8" and 6") in the plane of its web. The tool works on a crimping principle similar to reducing the diameter of round heating duct material. The tool bends track section to a specified radius to make curved walls, bulkheads, and archways. Figure 7.18 illustrates the track bending device.

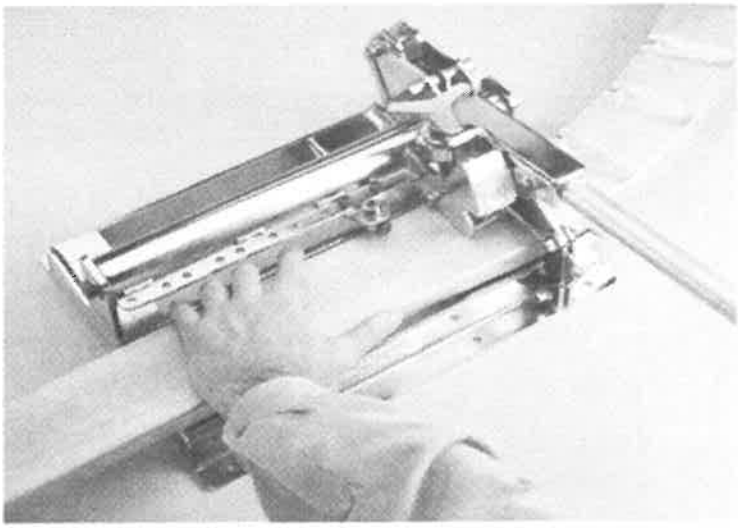

FIGURE 7.18 TRACK BENDER ™ Townsend Technologies, Maine, USA

7.6 Miscellaneous Tools and Accessories

A variety of other tools and accessories will be needed by the residential steel framer. These tools include clamps, levels, squares, pliers, markers, hammers, tape measures, and tool pouches.

7.6.1 Clamps

C-clamps and **bar clamps** are useful tools for residential steel framing. They are used to hold the steel pieces together during fastening. There is a tendency when screwing two layers of steel together for the screw, after penetrating the first layer, to push the second layer away before passing through it. This "jacking" causes the first layer to climb the threads of the screw. Clamps prevent this separation by holding the steel members together, allowing the screw to firmly drill through and tightly connect all layers of steel.

Locking C-clamps are probably the most popular form of clamp used on the residential steel framing job site. They are available in a variety of sizes or throat openings (the distance the clamp can fit over). The most common sizes of C-clamps found on the job site include:

- vise-grip 6 R;
- vise-grip 11 R;
- vise-grip 18 R.

The higher the "R" value, the larger the mouth of the clamp. All clamps should have regular tips on the ends without the pads in order to reach around steel flanges.

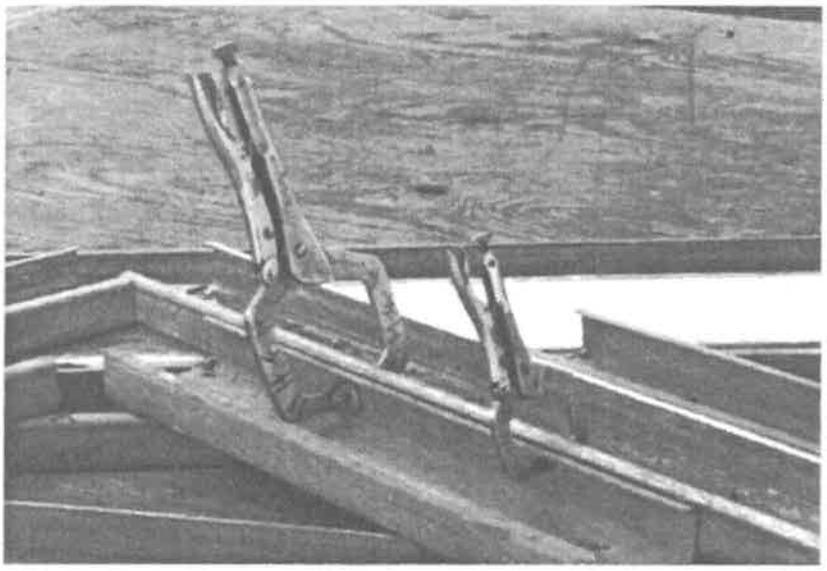

FIGURE 7.19 C-CLAMPS (The 11R clamp on left has pads that hang up on the lips of the studs. The 6R clamp on the right does not.)

Bar clamps are used to hold steel wall members together temporarily until permanent fastenings are applied. One common use is to hold headers in place after they are fitted into the top track. Improvements to the "Quick-Grip Bar Clamp" to a deeper 5 ½ in jaw depth have helped to adapt these clamps for steel framing use.

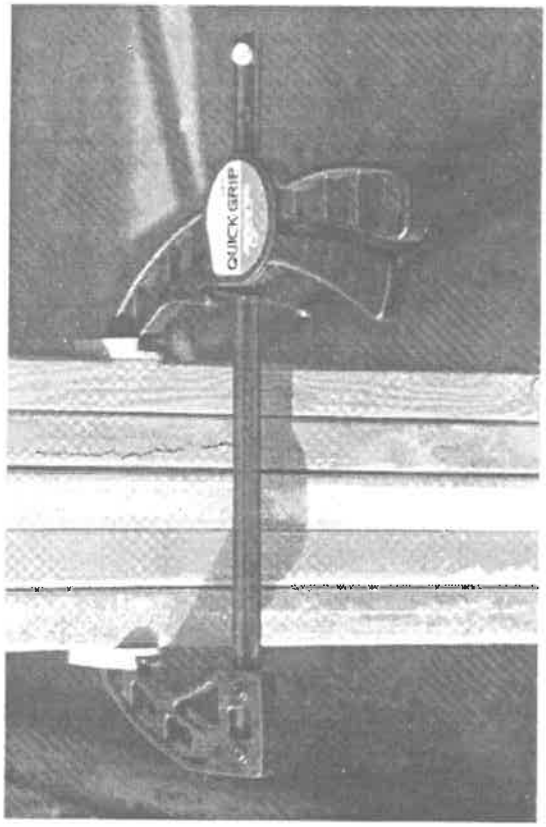

FIGURE 7.20 BAR CLAMP

7.6.2 Other Tools

Other tools that framers will need at a job site include the following:

- magnetic level - sticks to studs or joists and free the framer's hands;
- speed squares - triangular squares useful for scribing lines and squaring members;
- felt tip markers - useful for marking steel;
- bull-nose pliers - for removing screws;
- smooth-faced hammer - for tapping and positioning steel;
- tape measure – metric and imperial preferably 30 ft (9 m) length;
- leather tool pouch – to hold tools and different types of screws.

FIGURE 7.21 FRAMERS TOOL POUCH

Table 7.1 contains a summary of suggested tools for the framer who is considering the steel framing business. In some cases a manufacturer's name is specified. This in no way implies that that tool is only available from that manufacturer. The framer should instead focus on the tool specifications, rather than the manufacturer's name.

The table is divided into three main sections:

- fastening tools
- cutting tools
- miscellaneous tools

Table 7.1 Suggested Tools for Steel Framing

Task	Tool	Function
Fastening	• DeWalt 268 VSR Versa Clutch Screwdriver with 6.5–amp motor, 0–2,500 rpm variable speed, reversible, 1/4–inch quick change bit chuck, metal gear housing, adjustable torque control.	• Screwing steel-to-steel
	• DeWalt 276 Drywall Screwdriver—with 6.5–amp motor, 0–2,500 rpm variable speed, reversible, with depth locating nosepiece, metal gear housing. (Or DW274 for thin steel.)	• Attaching sheathing and drywall to steel
	• DeWalt 979K Cordless Drywall Screwdriver—with 1/4–inch quick change bit chuck, one hour charger, and extra battery.	• Attaching sheathing and drywall to steel
	• 2–inch magnetic bit tip holder and No. 2 Phillips bit tips.	• Phillips screws
	• 5/16–inch magnetic hex driver, 2–inch long.	• Hex screws
	• Two pair of Vise-Grip 6R locking C-clamps with regular tips, one pair of 11R, and one pair of 18R.	• Clamping steel together while fastening
	• Quick-Grip 53016 Bar Clamp, with 5 1/2–inch jaw depth.	• clamping headers in wall sections while fastening.
Cutting	• Prosnip Aviation Snips (Left Cut [101] for right handed framers, Right Cut [102] for left handed framers)	• for cutting up to 0.043 in (1.09 mm) material and making cuts for coping track.
	• DeWalt 14–Gauge Swivel Head Electric Shear	• cuts up to 0.068 in (1.73 mm) material, including C-section and flat material
	• DeWalt 14–inch Chop Saw	• Cuts several steel members at once, especially bundles of drywall (non-load bearing) studs
	• Unibit Step Drill Bit, 1–inch	• for drilling holes in studs and in track for anchor bolts
	• Caddy Hole Punch, 1 1/4–inch.	• punching holes for the installation of electrical and plumbing systems
Miscellaneous	• Wiss 3 1/2–inch and 5–inch Hand Seamers.	• bending and coping track
	• Manual Track Benders	• bending track in the plane of web
	• Bull Nose pliers.	• removing screws
	• Magnetic level	• frees hands during wall leveling; can be used to pick screws
	• Felt marker	• makes clear marks for layout and cuts (Black and Red).
	• Tape Measure	• measuring
	• Speed Square	• squaring walls, floors, and openings
	• Utility Knife	• general cutting tool
	• Smooth Faced Hammer or Drywall ax	• tapping steel studs, joists, and track into position
	• 50–foot grounded extension cords	• power for power tools
	• Carpenters pencils	• marking and layout
	• Leather tool pouch	• carrying tools and fasteners

8. FASTENERS

Chapter Objective

The purpose of this chapter is to identify the fastening systems that are used for residential steel framing, and to train the students in the correct selection and use of these fasteners.

This chapter familiarizes the student with the different types of fastening systems available for steel framing and the selection of an appropriate fastener. Fasteners include screws, nails, pins, clinches, welds, and foundation anchors. Because screws are the predominate fastener used in steel framing, a large section of this chapter is dedicated to screws.

Specific Learning Objectives

After completing this chapter, the student should be able to:

Objective 8.1: State the various types of fastening systems that may be used for residential steel framing including:

- Screws
- Drive pins and nails
- Welding
- Clinching
- Foundation anchors

Objective 8.2: Describe the important role that screws have in maintaining the structural integrity of the residential steel frame, and summarize the general guidelines for the use of screws.

Objective 8.3: Demonstrate the ability to identify and/or sketch the parts of a screw and select appropriate screws for various steel framing tasks, paying particular attention to the following:

- Screw Point: self-piercing; self-drilling
- Screw Diameter: #6; #8; #10; #12
- Screw Length: number of exposed threads on back side of connection
- Screw Head Style: hex washer; modified truss; pancake; bugle; trim; pan; truss; oval; flat; wafer
- Screw Drive Type: hex; #2 Phillips; #2 Robertson
- Screw Threads: coarse; medium; fine
- Screw Plating: zinc or other corrosion protection
- Steel Thickness
- Screws for steel-to-steel connections
- Screws for sheathing-to-steel connections
- Screws for drywall-to-steel connections

Objective 8.4 Demonstrate the ability to correctly make steel-to-steel and sheathing-to-steel connections using the appropriate screws and power tools. Develop the ability to identify improper screwed connections, and affect repairs to the connection.

Objective 8.5: Describe how drive pins or nails can be used to apply sheathing material and trim.

Objective 8.6: Recognize the use of welding as a valid fastening system for steel framing, and describe the precautions necessary when welding steel framing members

Objective 8.7: Recognize the use of clinching as a valid fastening system for steel framing.

Objective 8.8: Describe the special requirements for fastening the following materials in a steel framed home:

- Foam insulation
- Exterior siding
- Interior trim and baseboard
- Exterior trim
- Roof fascia and soffit
- Stucco lath
- Brick ties

Objective 8.9: Recognize five different ways to anchor the steel frame of a house to its concrete foundation including:

- Anchor bolts
- Mudsill anchors
- Anchor ties
- Mushroom spikes
- Pins

Suggested Activities

The recommended format for training is some initial classroom instruction with predominantly hands-on practice for the use of the fasteners. The instructor will need to be familiar with the correct operation and function of each fastener. Students should have an opportunity to select and apply fasteners during the layout and assembly of portions of a steel frame home in a laboratory setting.

Explain the different kinds of fasteners and stress the importance of using the right fastener for the task at hand. Keep copies of Tables 8.1 and 8.2 available for quick reference. Have figures of screw types readily available for the students to review when necessary.

Demonstrate the use of each fastener and provide enough opportunity for the students to try each fastener type and become reasonably proficient in their application. Emphasize that stripping screws destroys the strength of the connection. Show the students how to remove screws that are stripped or incorrectly applied.

Have plenty of sample screws on hand for steel-to-steel, sheathing-to-steel, drywall-to-steel, and other material applications (i.e. foam insulation, siding). Even though the course is not designed to demonstrate how to apply insulation and siding to a steel frame, the students need to see the correct screw for each application. Provide catalogs of screw manufacturers to the students for future reference.

Show the students the different ways to anchor a steel-framed house. Have samples of anchor bolts, mudsill anchors, anchor ties, mushroom spikes, and powder-actuated fasteners available for them to see.

Materials and Equipment

Fasteners required for the instruction in this chapter and for the framing portion of the course are summarized in the table below. Power and hand tools, personal protective equipment, and other accessories needed for the framing portion of the course are provided in the appropriate chapters of this manual.

Item	Quantity
#10 x 3/4 in hex head self-drilling screws for framing (2 large boxes)	10,000
#8 x 1/2 in modified truss head self-drilling screws for framing (2 large boxes)	20,000
#10 x 2 in self-drilling bugle head screws for attaching plywood or OSB subflooring	5,000
#6 x 1-1/2 in self-piercing screws for drywall	24
#6 x 1-1/2 in trim head screws for baseboard	24
#10 x 2 in self-drilling low profile screws with plastic washers for foam insulation	24
#12 Laminator type screws, self-piercing for attaching plywood to 0.033 in (0.83 mm) steel	24
Drive pins for pneumatic nail gun	24
J-bolts	2
Epoxy anchor bolts	2
Mudsill anchors	2
Anchor ties	2
Mushroom spikes, 1/4 x 2 in long	2
Powder actuated fasteners and shots	2
Screw manufacturer catalogs	12

8. FASTENERS

8.1 Introduction

Fasteners are an integral part of the structural steel frame of a house. Selecting and using the right fasteners is essential to maintain the structural integrity of the steel frame and to ensure the most economical means of assembly. Contractors can control fastener costs by selecting the correct fastener for the job.

This chapter familiarizes the student with the different types of fastening systems available for steel framing and the selection of an appropriate fastener for a variety of steel framing connections. Fasteners include screws, nails, pins, clinches, welds, and foundation anchor systems. Because screws are the predominate fastener used in steel framing, a large section of this chapter is dedicated to screws. This chapter is divided into the following sections:

Section 8.2: Screws
Section 8.3: Drive Pins and Nails
Section 8.4: Welding
Section 8.5: Clinching
Section 8.6: Miscellaneous Fasteners
Section 8.7: Foundation Anchors

The purpose of this chapter is to identify the fastening systems that are used for residential steel framing, and to train the students in the correct selection and use of these fasteners.

Considerable research is taking place to develop faster fastening systems for steel framing. New screw designs, clinching devices, and driving tools are currently being tested. It is important for steel framers to remain in contact with local tool and fastener manufacturers and distributors for the latest designs and applications.

8.2 Screws

In addition to selecting and assembling the correct LSF members, using the correct screws to connect them is an essential part of residential steel framing. Choosing the wrong screw(s) may result in improper connections and a failure of the connections to carry loads. Not using sufficient screws in a connection, or placing them in the wrong location can also lead to a failure.

When using screws to attach LSF members together, the screws create their own holes (**self-tapping**), so it is not necessary to predrill holes when assembling steel framing. Steel framing screws must therefore have the ability to make their own holes before the threads of the screw engage with the steel framing members.

The **pullout capacity** (ability to pull the screw out of the connection) of a screw is based on the number of threads engaging the steel, unlike a nail in wood which relies on friction. It is very important to select the correct screw and the correct screwgun to seat each screw and prevent the connection from being stripped.

Each screw has a point, diameter, length, head, drive type, thread, and plating. The various parts of the typical steel framing screw are illustrated in Figure 8.1 below.

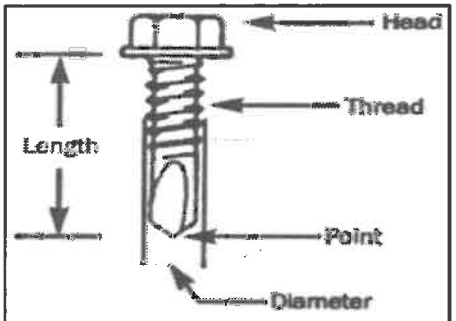

FIGURE 8.1 PARTS OF A SCREW

The rest of this section provides specific guidance regarding the use of screws in steel framing. Some general guidelines for using screws include:

- All screws must extend though the steel a minimum of three exposed threads;
- The minimum distance from a screw to a free edge of the steel member shall be 1.5 screw diameters;
- The minimum distance from a screw to a free edge of sheathing shall 3/8 in (10 mm);

- The minimum centre-to-centre spacing of adjacent screws shall be 2.5 screw diameters;
- The minimum corrosion protection for all screws is 0.0003 in (0.0008 mm) of zinc or equivalent;
- A variable speed (0 – 2,500 rpm) reversible screwgun equipped with a nose cone, torque clutch, and a minimum 4.5 amp motor should be used for driving screws into steel framing.

8.2.1 Screw Point Types

The point of a screw is designed to penetrate the steel before the threads engage. Two types of screws have been designed to create their own hole in the steel: screws that **pierce** a hole in the steel; and screws that **drill** a hole in the steel. Application conditions and manufacturer recommendations will determine the point type to be used.

Self-piercing screws (Point Style #2) are sharp-pointed screws (see Figure 8.2) that have traditionally been used to attach sheathing and drywall to non-load bearing studs. Self-piercing screws use an extremely sharp point to "punch" a hole in the steel and can be used for steel thicknesses of up to 0.033 in (0.84 mm).

Self-drilling screws (Point Style #3) have a drill point at the tip (see Figure 8.2). Self-drilling screws are required when the total thickness of steel is between 0.033 in (0.84 mm) and 0.112 in (2.8 mm). The drill point comes in different lengths and styles. To drill effectively through the steel, the drill point must be at least as long as the steel thickness. If the drill point is too short, the first layer of steel will climb the threads (jacking) instead of remaining in place while the screw penetrates subsequent layers. The screws will then either bind or break off entirely. Steel members should be clamped together prior to screwing to prevent any possibility of jacking.

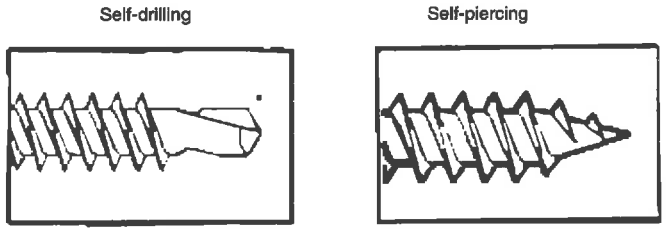

FIGURE 8.2 SELF-DRILLING AND SELF-PIERCING SCREWS

When the total steel thickness being connected exceeds 0.112 in (2.8 mm), pilot holes must be drilled through the material before installing the screw.

8.2.2 Diameter

Most screwed connections in residential steel framing are required to carry loads dictated by the structural design of the building. The size of screw needed will depend to a large extent on the total sheet thickness being connected and is normally specified with respect to diameter.

The **diameter** of a screw is the outside diameter of the screw thread as was seen in Figure 8.1. The diameter provides shear strength that resists the forces that try to break the screw across the shaft. Screw size is designated by a number which identifies the screw diameter. The higher the number, the greater the diameter and the stronger the screw. Most steel framing connections require a minimum of a #8 screw. Table 8.1 shows the typical screw sizes utilized in residential steel framing and the range of steel thicknesses for which they can be used.

Table 8.1: Screw Sizes and Typical Applications

Screw Size	Point Type	Application	Diameter		Total Thickness of Steel	
			inches	mm	inches	mm
#6	#2	• Non-load bearing steel-to-steel connections • Drywall-to-steel connections	0.138	3.5	≤ 0.033	≤ 0.84
#6	#3	• Drywall-to-steel connections	0.138	3.5	>0.033	>0.84
#8	#2	• Steel-to-steel connections • Sheathing-to-steel connections	0.164	4.2	0.035 to 0.100	0.89 to 2.54
#8	#3	• Steel-to-steel connections • Sheathing-to-steel connections	0.164	4.2	0.110 to 0.140	2.79 to 3.56
#10	#3	• Steel-to-steel connections • Sheathing-to-steel connections	0.190	4.8	0.110 to 0.175	2.79 to 4.45
#12	#3	• Steel-to-steel connections • Sheathing-to-steel connections	0.216	5.5	0.090 to 0.210	2.29 to 5.33

8.2.3 Screw Length

The **length** of the screw is measured from the bearing surface of the fastener head to the end of the point as was seen in Figure 8.1. For all connections, screws should extend through the back side of the steel a minimum of three (3) exposed threads. For most steel-to-steel connections 1/2 in (13 mm) or 3/4 in (19 mm) screws are acceptable. When applying sheathing, drywall, foam insulation, or other materials to the steel frame, proper screw length is determined by adding together the measured thickness of all materials plus an extra 3/8 in (10 mm) for the required three (3) exposed threads.

8.2.4 Screw Head Types

Many different screw head types are available. The **screw head** locks the screw into place, prevents it from sinking through the layers of material, and serves to hold the materials tight together.

Head type depends on the connection required, the materials being joined, and the application. The most common head types available today include:

- hex washer head - fastens thicker materials;
  washer face provides a bearing surface for the driver socket, assuring greater stability during driving;
  the 5/16 in (8 mm) head is the most common size;
- modified truss head -similar to pancake head (see below)
- pancake head - extremely low-profile head commonly used for attaching metal lath to steel framing;
  used where rigid finish material is to be installed over the tops of screws;
- bugle head - head is designed to slightly dimple drywall and sheathing without crushing the material or tearing the surface finish;
  leaves a flat, smooth surface for finishing;
- trim head - fastens wood trim or thicker, dense material to steel studs;
  small head sinks into the trim material;
  allows easy finishing with minimal disturbance of the material surface;
- pan head - fastens studs to track;
  connects steel bridging, strapping or furring channels to studs or joists;
  attachs steel door frames to studs

- truss head - similar to pan head but flatter profile (see above); fastens studs to track
- flat head - similar to oval head but flat head surface (see above)
- wafer head - fastens soft material to steel studs; head is larger than flat or bugle head; provides ample head surface to hold material against steel; sits flush with surface.

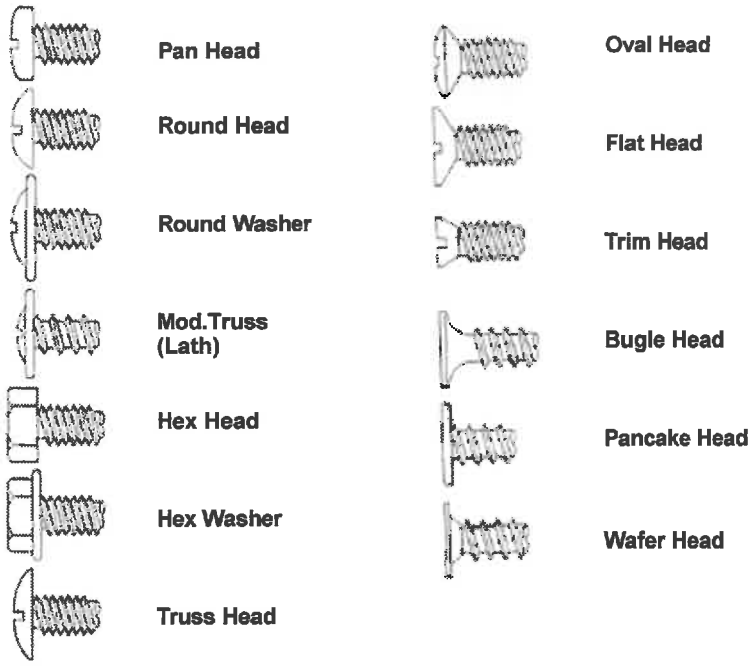

FIGURE 8.3 SCREW HEAD TYPES

When no sheathing or drywall needs to be applied to the steel framing members, the **hex washer head** is most commonly used for **steel-to-steel** connections. It has the most positive drive (see Section 8.2.5 Screw Head Drive Types).

If sheathing or drywall is going to be applied over the screwed connection, the head style must have a very thin profile to prevent bumps in the sheathing and drywall at the screw locations. **Modified truss** or **pancake head** styles are preferred for this application.

Bugle head screws are most commonly used when **sheathing-to-steel** and **drywall-to-steel** connections are required. This head type recesses into the wood or drywall, flush with or slightly below the surface, forming a smooth face. Cabinets are also attached with this type of screw.

Trim head screws are preferred when installing **baseboard** and **trim**. The small head penetrates the trim (much like counter-sinking a finishing nail), leaving a tiny hole easily filled with putty or wood filler.

8.2.5 Screw Head Drive Types

The **drive type** on the screw head determines the type of bit tip necessary to turn and drive the screw. The bit tip needs to fit securely, turn the fastener, and release quickly once the screw is seated. If the bit tip does not fit properly, it may become lodged in the head of the screw. Bit tips that are loose or the wrong type will usually damage the head of the screw. Figure 8.4 shows six drive types.

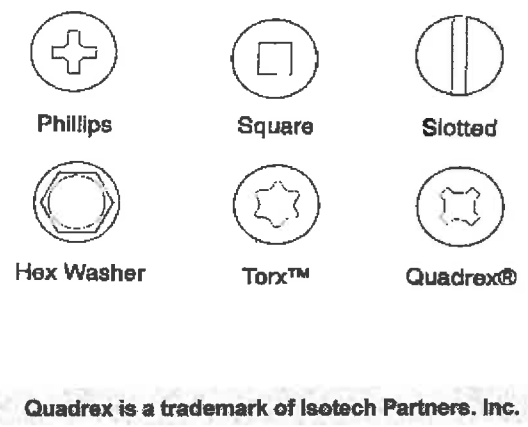

Quadrex is a trademark of Isotech Partners, Inc.

FIGURE 8.4 DRIVE TYPES

The most common drive types are the **Hex Washer,** the **#2 Phillips,** and the **#2 Robertson**. Phillips and Robertson drives are most commonly used with the modified truss head screws.

The term **connection** is often used by framers and drywallers to describe how secure the bit tip fits into the screw head. **Positive connections** have no slipping or movement while driving the screw The **hex washer** drive provides the most **positive connection** between the bit tip and the screw head. This drive type has the greatest resistance to slip and movement while driving the screw. Hex washer screws should be used in the steel frame where screw head clearance is not required.

8.2.6 Screw Threads

The **threads** of a screw cut the steel as it passes through, forming grooves that allow the screw to **seat** itself and bind the two materials together. Screws are commercially available with three distinct thread spacings: coarse; medium; and fine. Coarse threads are spaced the furthest apart, medium threads are spaced closer, and fine threads are spaced the closest together. Screws used

in steel framing generally have **coarse threads** due to their optimum cutting capability.

8.2.7 Corrosion Protection

All screws used in residential steel framing must be coated with 0.0003 in. (0.008 mm) of zinc or another coating that provides equal or better corrosion protection.

If the steel frame is going to be exposed to weather for a period of more than four months prior to enclosure, the screw connection details should be protected from corrosion. A spray-applied rust inhibitor is one option. This is especially important for connections that have a steel thickness more than 0.044 in (1.22 mm) thick. The heat generated by making the screwed connection in material this thick can alter the corrosion protection coating and reduce its effectiveness.

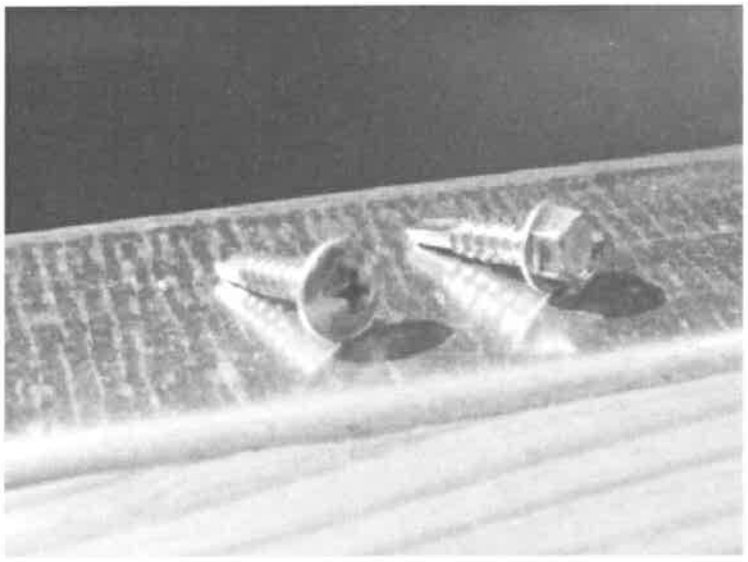

FIGURE 8.5 TYPICAL FRAMING SCREWS

8.2.8 Steel-to-Steel Connections

Minimum screw sizes for **steel-to-steel conections** should comply to Table 8.1. Where steel framing members have drywall or sheathing applied, framers should use #8 or #10 1/2 in (13 mm) low profile screws (i.e. modified truss or pancake) for the steel-to-steel connections.

8.2.9 Sheathing-to-Steel Connections

Sheathing-to-steel connections are made using screws that drill through both sheathing and steel layers, and hold the sheathing tight against the steel. The size and type of screw will depend on the thickness of the sheathing and steel. The most commonly used sheathing screw is the #8 self-drilling screw.

When the sheathing thickness is 1/2 in (13 mm) or less and the steel thickness is 0.033 in (0.84 mm) or less, the **#8 self-piercing** screw is recommended.

For thicker steel and sheathing, use **#8 self-drilling** screws with pilot points (long drill point with no threads). This screw will penetrate the steel without the sheathing climbing the threads. After the pilot point penetrates the steel, the threads engage and pull the sheathing tight against the steel.

Winged (fluted) screws may also be used to attach sheathing to steel. The wings clear the wood away from the threads, preventing jacking of the sheathing. Once the wings contact the steel, they break off and the screw penetrates the steel.

A **#10 laminator-type drywall screw** may also be used for steel thicknesses of 0.043 in (1.10 mm) or less. This screw was not originally designed to attach plywood to steel, however many framers now use this screw to attach plywood and OSB to the steel frame. Laminator-type drywall screws are available in plated form. Screw diameter should be selected based on the thickness of the steel (see Table 8.1).

Self-drilling #10 1-1/2 in (38 mm) wafer head screws are recommended for connecting a **wood subfloor** to steel joists. Framers also commonly use #8 1-1/4 in (31 mm) bugle head screws for subfloors. Screws should be spaced 6 in (150 mm) o/c along the sheathing edges and 12 in (305 mm) o/c in the field. The minimum distance from screw to any edge must be 3/8 in (10 mm).

When attaching sheathing to the steel frame, the framer must make sure that the sheathing is held tightly against the steel while screwing. This can be achieved by clamping the sheathing or standing on the sheathing while the screws are being inserted. Ensure the screw head is seated flush with the sheathing. Flat, bugle, or wafer heads are designed to leave the screw head flush with the surface of the sheathing. Use a depth-sensitive nose-piece on the screwgun to prevent over-drilling through the sheathing layers. Over-drilling will reduce the effectiveness of the connection and void any warranty on the sheathing.

Adhesives can be used when attaching subflooring to the steel however they must be used with caution. The floor must be completely fastened (nailed or screwed) before the adhesive cures. Adhesive applied well before the subfloor is attached, may harden and hold the subfloor sheathing away from the steel. This may eventually cause the floor to squeak.

8.2.10 Drywall-to-Steel Screws

Drywall screws (**#6 self-piercing bugle head**) can be used to attach drywall to steel framing members. Drywall screws should be used with a depth-sensitive nosepiece to avoid piercing the drywall. The standard fastener for interior non-load bearing walls is a #6 7/16 in (11mm) self-piercing screw. For steel thicknesses up to 0.033 in (0.84 mm) a #6 1-1/4 in (31 mm) self-piercing screw can be used. For steel thicknesses greater than 0.033 in (0.84 mm) use a #6 1-1/4 in (31 mm) self-drilling screw.

8.3 Drive Pins and Nails

Drive pins and **nails** are designed for use in an airgun. They are specifically made to penetrate steel and generally have spiral grooves on the nail shaft. Pneumatic nail guns, similar to those in wood framing, can significantly increase productivity at the job site.

Plywood or OSB sheathing may be applied using 1 in (25 mm) to 1-1/2 in (38 mm) pneumatic pins. The sheathing must be held tightly against the steel before the pin is driven. It is recommended to first screw the perimeter of each sheet to the steel, and then use drive pins in the field. The perimeter screws will hold the sheathing against the steel. Roof sheathing may also be installed with pins. The framer usually stands on the sheathing to keep it tight against the steel.

Adhesives can be used when pinning subflooring to the steel however they must be used with caution. The floor must be completely fastened (nailed or screwed) before the adhesive cures. Adhesive applied well before the subfloor is pinned, may harden and hold the subfloor sheathing away from the steel. This may eventually cause the floor to squeak.

FIGURE 8.6 PINS

8.4 Welding

Welding steel framing members is preferred by some framers. Contractors who choose to weld LSF members must use certified welders to meet building code requirements. Welding is suitable for panelized operations where quality can be maintained in a shop setting and in locations where welders may work protected from the weather.

The galvanized coating on the steel is destroyed in the area of the weld, so welded areas must be touched up with a zinc-rich metallic coating to restore the integrity of the corrosion protection.

Welding is a much more robust fastening system compared to mechanical fasteners. Careful layout and assembly organization are vital for this type of fastening. If studs are installed incorrectly by welding, they must be cut out to be removed.

8.5 Clinching

Clinching requires no screws or pins, only a pneumatic tool that **press-joins** the pieces of steel together. This system is gaining in popularity with the improvement of clinching devices. The manufacturers of the clinching tools provide test reports that verify the strength of the press-joining.

This fastening method is less permanent than welding. If studs are fastened and reconnected incorrectly with a clinch connection, the stud may be popped out with a screwdriver. Like welding, clinching works well in controlled panelization environments.

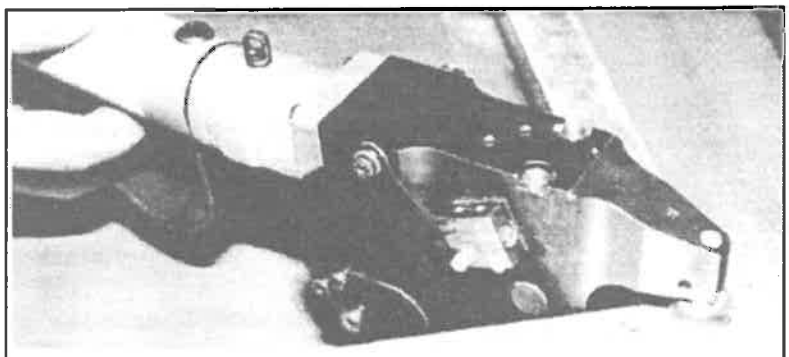

FIGURE 8.7 CLINCHING

8.6 Miscellaneous Fasteners

8.6.1 Fasteners for Foam Insulation

Foam insulation installed directly over steel may be attached with **#8 self-drilling low profile** screws (i.e. modified truss or pancake head) with a plastic washer.

The screw must be long enough to penetrate the foam insulation and steel, and leave three exposed threads on the back side of the steel. The plastic washer will prevent the screw head from penetrating and crushing the foam insulation. Screws may be purchased with plastic washers attached.

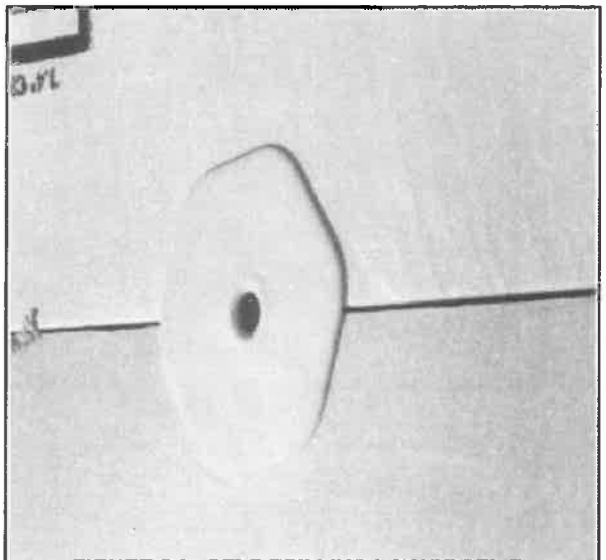

FIGURE 8.8 SELF-DRILLING LOW PROFILE SCREW WITH A PLASTIC WASHER

Another method is the use of weld pins and clips. The pins are welded to the studs with a 120 volt portable power source. The foam insulation panels are pressed over the pins and retained with clips. Pins are seen projecting from the jack stud and window sill in Figure 8.9A. The retaining clip is shown holding the insulation in place in Figure 8.9B.

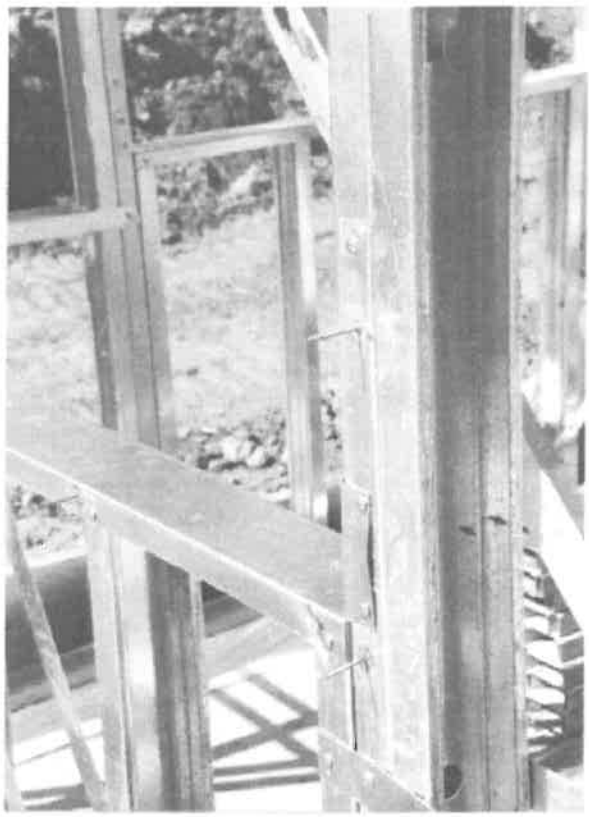

FIGURE 8.9A PIN

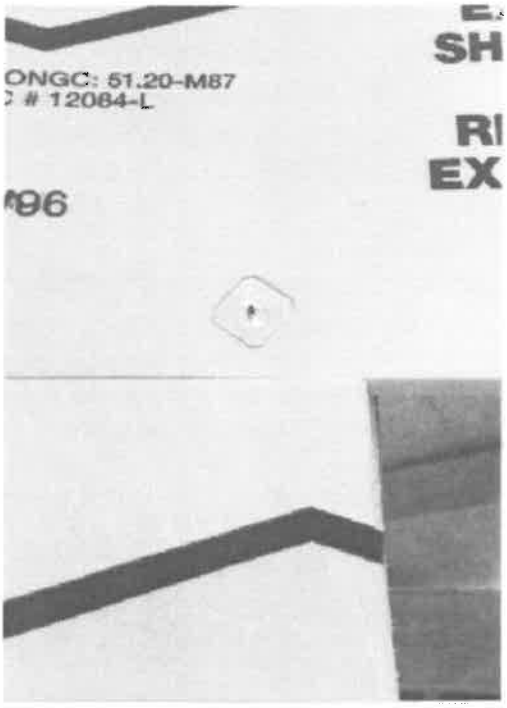

FIGURE 8.9B CLIP

8.6.2 Fasteners for Exterior Siding

There are many different types of siding available to finish the exterior of a steel framed house. Fastener types will depend on the siding. Siding can be nailed to structural sheathing. Siding attached directly to steel usually requires a minimum **#8 self-piercing bugle head** screw. Self-drilling and larger diameter bugle head screws must be used for steel thicknesses greater than 0.033 in (0.84 mm).

Bugle head screws with nibs on the underside of the head are available to help countersink the screw into the siding without stripping the connection.

For cement composite siding, such as Hardie Board, screws with wings (fluted) may be used. The wings slightly over-bore the hole and break off when they hit the steel, pulling the siding tight against the steel. Use #8 screws for steel thicknesses up to 0.033 in (0.84 mm) and #10 for steel thicknesses greater than 0.033 in (0.84 mm).

8.6.3 Fasteners for Trim

When installing **interior trim** use **#6 self-piercing finish** or **trim head** screws. Baseboard can also be nailed to the steel studs and bottom track with a pneumatic tool. Adhesives may be used to attach trim without fasteners.

Fasteners for **exterior trim** are selected in the same manner as siding. The length of the screw is determined by the thickness of steel, siding , trim, and three exposed threads. A **#8 self-piercing** or **self-drilling bugle head** screw is generally used.

8.6.4 Fasteners for Roof Fascia

When installing roof fascia over steel, attach the wood to the steel using a minimum **#8 screw**. The screw should be long enough that three threads are left exposed on the back side of the steel. If the steel thickness is 0.033 in (0.84 mm) or less, wood trim may be attached with self-piercing screws. For thicker steel a self-drilling screw is required.

8.6.6 Fastener Summary

Table 8.2 provides a quick overview of the different residential steel framing fasteners and their common applications.

Table 8.2: Recommended Residential Steel Framing Fasteners

APPLICATION	FASTENER
Non-Load Bearing Steel-to-Steel Connections	#6 screw minimum; self-piercing, low profile
Load Bearing Steel-to-Steel Connections	#8 screw minimum; self-drilling, low profile where drywall and sheathing is installed; hex washer head screws elsewhere
Diagonal Flat Strap Bracing	#8 screw minimum; self-drilling, low profile
Drywall	#6 screw minimum; self-piercing bugle head for 0.033 in (0.84 mm) and thinner steel; self-drilling bugle head 0.033 in (0.84 mm) and thicker steel
Interior Trim	#6 trim head screws or finishing nails and adhesive; finishing nails where wood blocking has been installed
Foam Insulation	Roofing nails where structural sheathing has been applied; #6 screw minimum, self-drilling, low profile screws with plastic washers
Structural Sheathing	#8 screw minimum; self-drilling, bugle head; and/or pneumatic drive pins or nails
Stucco Lath	Roofing nails where structural sheathing has been applied; #8 screw minimum, self-drilling, low profile screws for attaching to steel framing members
Siding, Hardboard, Fiber Cement, or Panel	#8 screw minimum; self-drilling, bugle head for steel; coated drywall screws where structural sheathing has been applied
Vinyl Siding	Staples where structural sheathing has been applied; #8 screw minimum; self-drilling, low profile screws; and/or pneumatic drive pins or nails

8.7 Foundation Anchors

As with wood framed residential construction, steel frames need to be anchored to the foundation of the house. LSF houses have no special requirements beyond the normal anchoring methods used in wood construction. A variety of anchoring systems are commercially available.

8.7.1 Anchor types

The most common anchors used to support steel structures are anchor bolts (J-bolt or threaded rod). Mudsill anchors, anchor ties, mushroom spikes and powder actuated fasteners can also be used.

Anchor bolts are attachment devices that are embedded in the concrete foundation. They include J-bolts and threaded rods which have nuts and washers on the embedded end (see Figure 9.8). Epoxy anchor bolts are also used. The hole is drilled after the concrete is poured and the bolt is epoxied into place (see Figure 9.9).

Mudsill anchors fit in the bottom track to hold the wall down. They are usually available from specialty fastener companies, such as Simpson Strong-Tie, or fabricated in the field.

Anchor ties are steel straps that are embedded in the concrete and bend up to attach to the floor joists and wall studs (See Figure 9.10).

Expansion fasteners that expand in pre-drilled concrete holes.They are manufactured by companies such as RAWL. They are typically used to hold down bottom track or rim joists.

Pins can be fired by a powder-actuated gun to hold the bottom track down to the foundation. Companies such as Hilti manufacture these powerful tools. Proper training from the manufacturer must be obtained prior to using powder-actuated tools.

8.7.2 Anchor Selection

The embedded anchors (J-bolts and threaded rods) are within the applicability of *CSSBI Steel Framing for Part 9 Construction*. The size and spacing of these embedded anchors must follow the requirements of the applicable building code. All other anchor types must be installed according to manufacturer's recommendations and are subject to approval by local building authorities. *Chapter 9 Foundations* provides more details about foundation anchoring.

9. FOUNDATIONS

Chapter Objective

The purpose of this chapter is to familiarize the student with the different types of basement foundations that may be used in conjunction with steel framing, and the various anchoring methods used to attach the steel frame to the foundation.

The student will be shown how to anchor the steel frame (first floor assembly) to the top of foundation using both a wood sill plate and direct bearing anchorage systems. The options for foundation anchors will also be discussed.

Specific Learning Objectives

After completing this chapter the student should be able to:

Objective 9.1: Describe the importance of properly securing the steel frame of a house to its foundation.

Objective 9.2: Demonstrate an understanding of the following different types of house foundations commonly used in conjunction with steel framing:

- Full basement foundation
- Crawl space foundation
- Slab-on-Grade foundation
- Steel Framed foundation

Objective 9.3: Demonstrate the ability to properly anchor a first floor assembly to a concrete foundation using the following techniques:

- Wood sill plate anchorage
- Direct bearing anchorage

Objective 9.4: List and describe the following types of anchoring that are commercially available for residential steel framing:

- Embedded anchors
- Epoxied anchors
- Anchor ties

Objective 9.5: State the tolerances for foundation construction that can be accommodated by a steel frame home. What must be done if these tolerances in foundation level, plumb, and square are exceeded?

Suggested Activities

The recommended format for training is predominantly classroom discussion and demonstration of the foundation and anchor types. The instructor must be familiar with each foundation type, be prepared to discuss the advantages and disadvantages of each type, and describe the typical situations under which one would choose one type over the other.

Explain the different types of anchoring mechanisms, pointing out the figures in the manual. Have several samples of anchor bolts available for the students to look at.

The hands-on component of this chapter should include small sections of foundation wall where the students can practice both the wood sill plate and direct bearing anchorage techniques for securing a first floor to the foundation. As an alternative, the students can practice foundation anchoring as part of the first floor layout and assembly in *Chapter 10 Floor Joists*.

Materials and Equipment

Anchors, fasteners, and LSF members should be available for demonstration and hands-on practice from other Chapters in this manual. Chapter 8 Fasteners contains a list of material that includes screws and anchors. Chapter 10 Floor Joists contains a list of material that includes rim joist and C-section for floor joists. Steel plates, clip angles, gaskets and/or caulking, and 2x4 wood for sill plates will also be required for the anchoring demonstration.

9. FOUNDATIONS

9.1 Introduction

The foundation of a steel framed residential dwelling is designed and constructed in the same way as a foundation for a conventional wood framed structure. No special foundation requirements are necessary for a steel framed house.

The quality of design and construction of the foundation of a home will affect the ability of the framer to layout and assemble a steel frame that is level, square, and capable of carrying the anticipated live and dead loads. This chapter briefly describes the types of foundations commonly used for residential structures and focuses on the details of anchoring the steel frame to the foundation.This chapter is divided into the following sections:

Section 9.2: Foundation Types
Section 9.3: Steel Framing Foundation Anchoring
Section 9.4: Tolerances for Foundation Construction
Section 9.5 Support Beams

The purpose of this chapter is to familiarize the student with the common techniques (wood sill plate and direct bearing) available to anchor the steel frame of a residential dwelling to its foundation.

9.1.1 Purpose of Foundation

The foundation of a home supports the dead and live loads of the structure, transferring these loads to the footings and underlying soil. Regardless of the type of foundation selected for a steel framed house, the steel frame must be securely attached to the foundation and the foundation must adequately anchor the house, to prevent failure of the structure during severe weather conditions, seismic events, and day-to-day occupant activities.

The foundation is also designed to provide a level surface on which to start framing the structure. A well-designed and constructed foundation will help to produce a level, square and straight-walled steel framed home.

9.2 Foundation Types

The four types of foundations that may be used for residential steel framing are:

- Full basement;
- Crawl space;
- Slab-on-grade;
- Steel-framed

9.2.1 Full Basement Foundation

A **full basement** normally consists of 6 - 8 ft (1.8 - 2.4 m) poured concrete or concrete block walls supported on strip footings. Steel or wood foundations can also be used. A drainage system (weeping tile) is provided around the footings, and the exterior of the foundation wall is waterproofed and then carefully back-filled with granular and soil. Full basements normally have a finished floor below grade and provide useable living space for the occupants. When the basement is heated it can be used for laundry, furnace, and utility rooms, recreational rooms, storage rooms, and workshops. Hard, rocky ground and/or high water tables can make full basements impractical.

FIGURE 9.1 FULL BASEMENT FOUNDATION

9.2.2 Crawl Space Foundation

A **crawl space** is the term used to describe a much shallower foundation. Crawl spaces are used in areas where full basement foundations are not practical due to soil or bedrock conditions. Crawl spaces are often used for building additions, renovation work, and "cottage" properties.

Crawl space foundations normally consist of 2 – 4 ft (0.6 – 1.2 m) stem walls that elevate and support the first floor. Stem walls are typically made from reinforced concrete and/or concrete block. A crawl space foundation can also consist of posts supported on spread footings with beams spanning from post to post.

The ground surface beneath the crawl space must be adequately drained and is often covered with stone or other granular drainage material. Because a crawl space is not normally heated and allows air circulation underneath the house, the first floor over a crawl space must be insulated and have a vapour barrier according to *NBCC*.

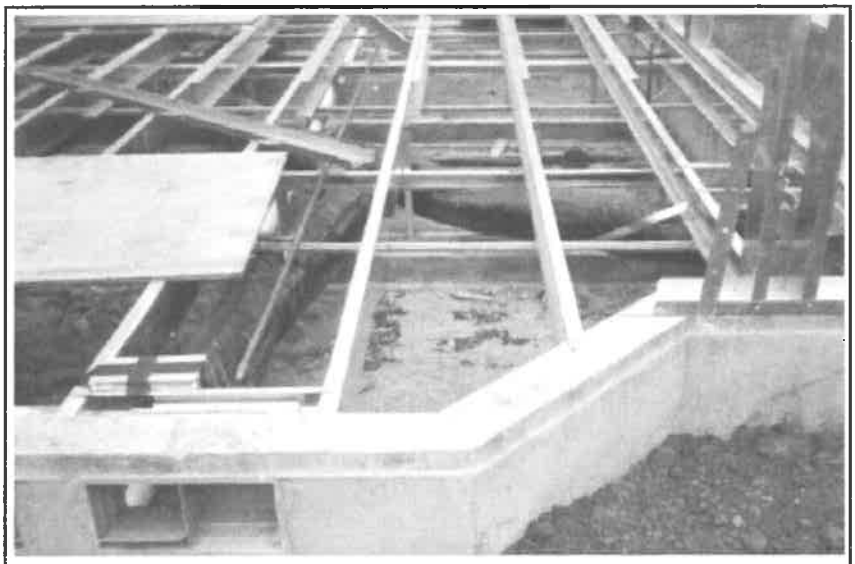

FIGURE 9.2 CRAWL SPACE WITH STEM WALL FOUNDATIONS

9.2.3 Slab-on-Grade Foundation

A **slab-on-grade** foundation consists of a reinforced concrete slab at, or slightly above finished grade. Slab-on-grade is normally used where soil conditions and the water table would not permit either a full basement or a crawl space foundation.

This type of foundation must be placed on an adequate bed of crushed stone or gravel for drainage. The concrete at the slab edge must be sufficiently thick to accommodate loading due to seismic and overturning forces from wind. Refer to the *NBCC* and local building codes for guidance, or consult a geotechnical engineer for the design of a slab-on-grade foundation.

FIGURE 9.3 SLAB-ON-GRADE FOUNDATION

9.2.4 Steel Framed Foundations

Steel framing can be used for full basement foundation construction as shown in Figure 9.4. The steel basement wall is constructed similar to an above grade exterior wall with load bearing studs framing into top and bottom tracks and cross bracing. Since foundation walls resist not only vertical loading but lateral loading from soil pressure, they must be engineered by a professional.

A steel-framed foundation consists of full width, load bearing walls on strip footings. The exterior of the steel frame is clad with wood or steel sheathing, suitably insulated, waterproofed and carefully backfilled.

FIGURE 9.4 STEEL-FRAMED FOUNDATION

9.3 Steel Frame Foundation Anchoring

Just like in wood-frame construction, a steel-framed home must be firmly anchored to its foundation. Most house foundations are made from either poured concrete or concrete block. The foundation anchors for the steel frame must be securely embedded or attached in some manner to the foundation material.

The *CSSBI Installation Manual* provides several options for anchoring the steel-framed home to wall-type foundations (full basement or stem walls). This section describes the following two primary techniques:

- Wood sill plate anchorage;
- Direct bearing anchorage;

using the following different types of anchoring mechanisms:

- Embedded anchor bolts (J-bolts, threaded rods)
- Epoxied anchor bolts
- Clip angles
- Steel plates
- Anchor ties

9.3.1 Wood Sill Plate Anchorage

The **wood sill plate anchoring** technique is the same as that used for wood-framed construction. A piece of dimensional lumber (2 x 4 in nominal) is bolted to the top of the concrete foundation wall. The size and spacing of anchor bolts that tie this wood sill plate to the foundation must conform to the building codes. The *NBCC* requires 1/2 in (13 mm) diameter bolts at a minimum 94 in (2400 mm) o/c. The wood sill plate should have a gasket, mortar bed or non-hardening caulking between it and the top of foundation. The sill plate is levelled and securely fastened to the threaded anchor bolts and the top of the foundation with washers and nuts.

Figure 9.5 depicts the technique of anchoring the steel frame system to the wood sill plate. The rim joist of the steel floor system is fastened to the wood sill plate with a 3 x 4 x 0.033 in. (75 x 100 x 0.84 mm) steel plate as shown in Figure 9.6, using #8 screws into the rim joist and common nails into the wood sill plate. These steel plates are installed every 3 ft (915 mm) o/c.

If an anchor bolt interfers with the placement of the rim joist, the lower channel flange can be notched to accomodate the bolt. In no case should an anchor bolt interfere with the connection of a floor joist to the rim joist.

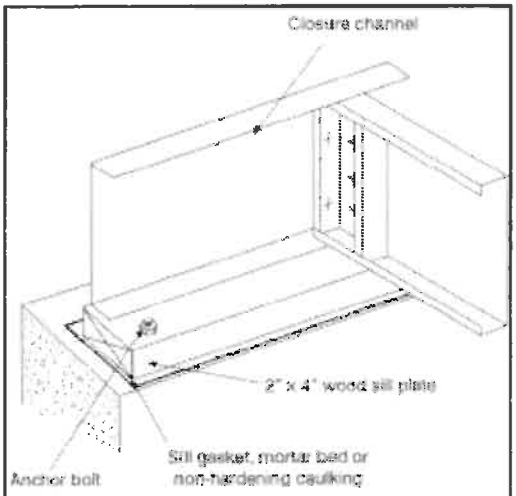

FIGURE 9.5 FLOOR SYSTEM ANCHORAGE – WOOD SILL PLATE

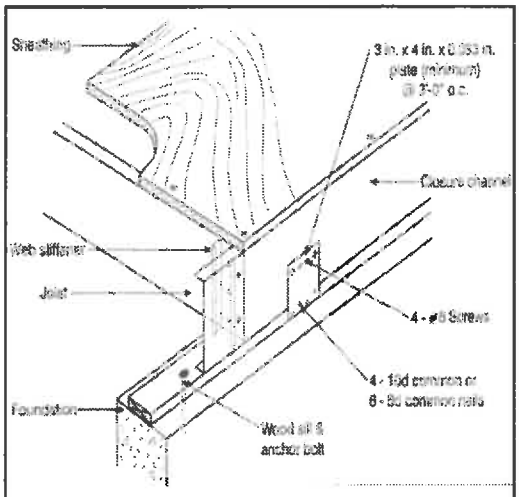

FIGURE 9.6 FLOOR TO WOOD SILL CONNECTION WITH PLATE

9.3.2 Direct Bearing Anchorage

The **direct bearing anchoring** technique places the rim joist directly onto the top of the foundation without the use of a wood sill plate. Figure 9.7 shows a detail of a steel floor system attached directly to the concrete foundation using a clip angle and anchor bolt. Eight #8 screws are used to connect the clip angle to the rim joist. The clip angle measures 6 x 6 x 0.054 in. (150 x 150 x 1.37 mm) minimum size. These clip angles and anchor bolts are required every 6 ft (1.83 m) o/c.

A sill gasket, mortar bed, or non-hardening caulking must be placed between the steel rim joist and foundation. The clip angles should be first secured to the anchor bolts, and then attached to the rim joist when the floor system is levelled and squared.

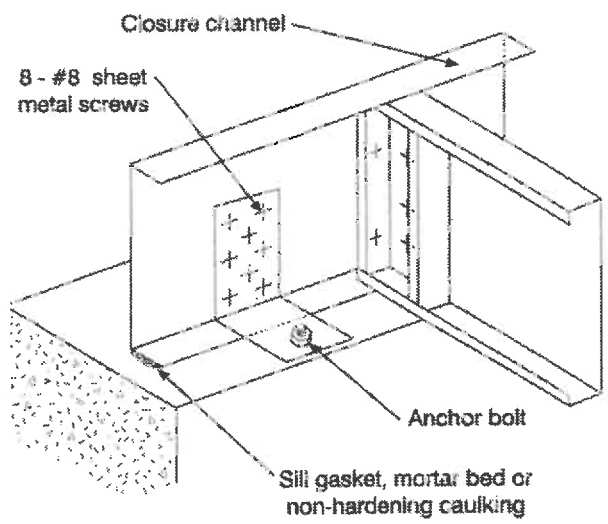

FIGURE 9.7 FLOOR SYSTEM ANCHORAGE – CLIP ANGLE WITHOUT SILL PLATE

9.3.3 Foundation Anchors

Foundation anchors provide the connection between the foundation and the steel frame of the house. Anchors are normally embedded in the concrete during the constructon of the foundation. The bond between anchor and foundation largely depends on the adhesion between the two which provides resistance to 'pull-out'.

Foundation anchors commonly used for residential steel framing include:

- Embedded anchors (J-bolts, threaded rod)
- Epoxied anchors
- Anchor ties

J-bolts are embedded-type anchors that have a threaded rod at one end and a "J" shape bent into the opposite end. It is placed in the foundation with the "J" portion embedded into the concrete (or concrete filled block) providing additional pull-out resistance. The threaded rod end with a washer and nut is used to hold down the wood sill or rim joist for the first floor assembly.

Threaded rods are embedded-type anchors that consist of a steel rod, threaded on both ends with a washer and nut screwed on one end. It is placed in the foundation with the washer and nut portion embedded into the concrete (or concrete filled block) providing additional pull-out resistance. The other threaded rod end with a washer and nut is used to hold down the wood sill or rim joist for the first floor assembly.

J-bolts and threaded rod anchors are commercially available or they can be custom made. Embedded anchors that are placed in poured concrete can be installed using several methods. The bolt placement can be measured and held in position by hand during concrete placement, but this method is subject to the most error. A template made from steel plate or wood, with pre-drilled holes for the anchor locations, can be placed over the concrete to locate and hold the anchors in place while the concrete cures. The anchors can also be attached to wire or wire mesh to hold them in position while the concrete foundation is poured.

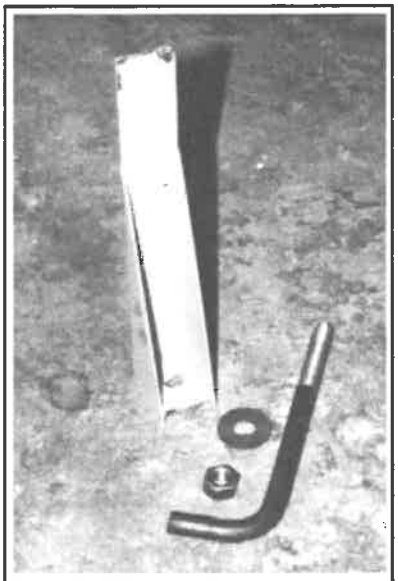

FIGURE 9.8 J-BOLT AND HOLD-DOWN BRACKET

Epoxied anchor bolts are another option for foundation anchors if the contractor doesn't want to embed the anchors during the pouring of the concrete foundation. When the concrete has hardened the location of the anchor bolts is measured and marked on the top of the foundation. Holes are drilled into the concrete, cleaned, and then injected with an epoxy resin. A threaded rod is placed in the epoxy which quickly hardens to form a bond between the rod and the concrete.

Epoxied anchor bolts are an excellent option when an embedded anchor bolt is placed in the wrong location or interferes with the placement of a floor joist. The embedded bolt is simply cut off at top of foundation and a new epoxied bolt placed close to it, but away from the floor joist location.

Various accessory suppliers produce epoxies for foundation anchoring. Directions should be strictly followed for best results.

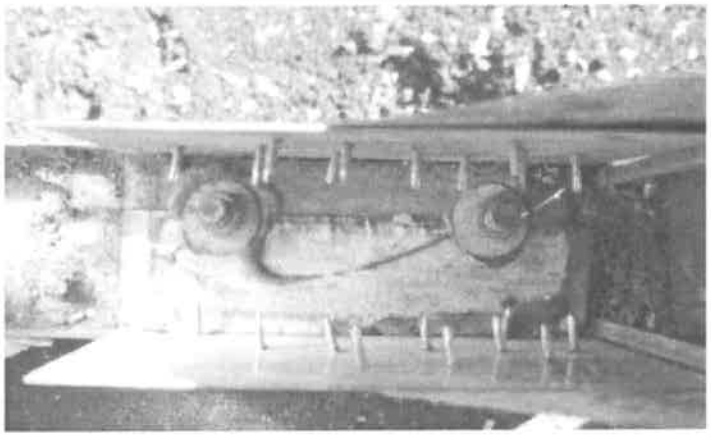

FIGURE 9.9 EPOXIED BOLTS

Anchor ties are another method for anchoring a steel frame to its foundation. Figure 9.10 shows an anchor tie attached to a rim joist bearing on the concrete. The bottom of the tie is embedded in the concrete and the upper part is fastened to the rim joist of the first floor system.

Anchor ties should be spaced to correspond with the layout for the diagonal flat strap bracing used for wind and racking resistance (see *Chapter 11 Load Bearing Walls*). Since anchor tie systems are proprietary, the framer should consult with the maufacturer and the local building authority to determine the approved minimum spacing of the ties.

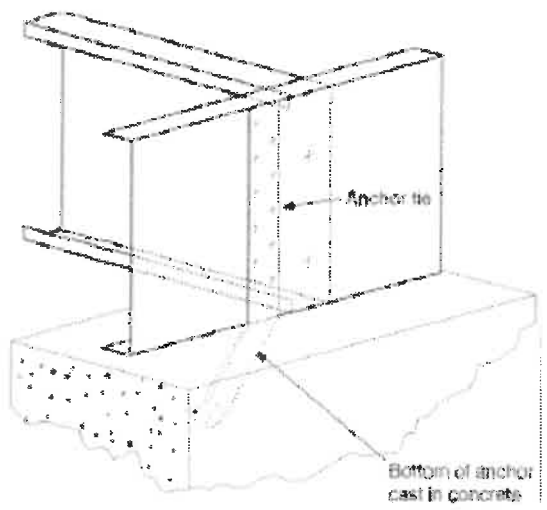

FIGURE 9.10 FOUNDATION ANCHORAGE – ANCHOR TIES

Other commercial methods for anchorage include mushroom spikes, mudsill anchors, and pins from a powder-actuated gun. Framers should confirm with the local building authority that these are a valid foundation anchoring method before using them.

9.4 Tolerances for Foundation Construction

Even with the most rigid and cautious quality control over the construction of the foundation, some irregularities may occur. Steel framing can tolerate the same variations from level, plumb, and square as wood frame construction for the foundation wall.

The perimeter members (rim joist and floor joists) of the floor framing system must bear on the foundation. Gross unevenness along the top of the foundation wall that can not be accommodated by a sill gasket or caulking must be chipped, chiseled or grouted.

9.5 Support Beams

Intermediate support beams for the floor joists are normally structural steel beams of steel thickness much greater than the LSF members. While considered part of the structural frame of the house, this manual does not intend to deal with this issue in any detail. Beam sizes may be selected from the appropriate building code. For example *Section 9.23.4.3 NBCC* provides maximum spans for steel beams of various sizes and anticipated loads.

10. FLOOR JOISTS

Chapter Objective

The purpose of this chapter is to introduce the student to the design considerations for floor joist orientation and span, to familiarize the student with the layout, assembly, and bracing of floor systems, and to discuss the subfloor considerations for steel framed floors.

The primary members of any floor system are the floor joists. Floor joists are the horizontal members that span between underlying supports, and support loads from above. The other parts of the floor system include the rim joists, bracing, bridging, subfloor, and floor finishes.

Specific Learning Objectives

After completing this chapter, the student will be able to:

Objective 10.1: Demonstrate a basic understanding of floor joist orientation and span design, and be able to identify floor joist orientation and dimensions from building plans.

Objective 10.2: Describe the differences between a single span and continuous span floor joist.

Objective 10.3: Given a set of blueprints, and working in a small team (two of three), demonstrate the ability to layout and assemble a steel frame floor system using a wood sill plate anchoring system, paying particular attention to the following elements and details of layout and assembly:

- Principle of in-line framing and the allowable tolerances for aligning floor joists and wall studs;
- Identify and select the correct size of track sections, C-sections, fasteners and other materials required for the floor system;
- Place the rim joist, measure and mark the floor joist locations;
- Identify locations where web stiffeners and clip angles will be required in the floor system;
- Install the appropriate rim joists and floor joists as per plans and specifications to minimize potential for floor squeaking, deflection, and movement;
- Construct lintels where necessary to pass over basement windows;
- Frame floor openings with properly assembled header and trim joists as per building plans and *CSSBI Installation Manual* specifications;
- Understand that continuous spans and cantilever floor systems require a structural engineer for design and approval;

- Recognize the importance of aligning the punchouts for services in the floor joists;
- Understand the importance of subfloors for bracing and the instability of floor joists that have not been sheathed;
- Properly brace a LSF floor using both structural subfloor sheathing on top and flat strap bracing and blocking on the bottom;
- Demonstrate the proper techniques for rim joist splices and overlapped floor joist connections;
- Discuss the special considerations required for second floor steel frame systems as compared to the ground floor (on foundation) systems.

Objective 10.4: Demonstrate the ability to select and use the appropriate fasteners and fastening systems for steel framed floor systems.

Objective 10.5: Identify where insulation must be installed in voids during the assembly of steel framed floor systems.

Objective 10.6: Understand that floor joists should have their webs facing the same direction.

Suggested Activities

The recommended format of training is classroom discussion followed by hands-on construction of a steel framed floor system. A simulated foundation with a wood sill plate and any intermediate support beams will be required to match the foundation dimensions of the design house.

For floor systems in steel, the entire layout and assembly process must be explained first, prior to the students attempting to lay out and assemble the floor. To address the specific learning outcomes in the above objectives make sure the following points are covered in the classroom discussion and floor layout and assembly.

- Using the set of blueprints, explain the joist orientation and span and why the orientation was chosen;
- Explain how in-line framing may dictate the floor joist layout;
- Show how the rim joist is placed and attached to the wood sill plate, ensuring the correct dimensions for the floor joists to be installed with 1/8 in (3 mm) gap between channel web and the end of the floor joists;
- Illustrate how the floor joist locations are marked on the rim joist, including the rim joists;
- Demonstrate how the floor joists are installed and connected to the rim joist;
- Describe the purpose and process of installing web stiffeners when connecting the joists to the rim joist;
- Explain how lintels are built and installed over basement windows, and illustrate how floor joists are attached to the lintels;
- Describe how overlapped joists are tied together and to the support beam on which they rest;
- Demonstrate the technique of doubling up joists under non-load bearing partition walls;
- Discuss the importance of avoiding toilet flanges, tub and shower drains (see also *Chapter 19 Utilities- The Other Trades*);
- Explain the floor frame construction around openings and include the assembly of trimmer joists, header joists and tail joists. Describe the CSSBI specifications for header-to-trimmer connections and have the students practice the connections;
- Forewarn the students that continuous span and cantilever floor systems require the services of a structural engineer for both design and connection details;
- Demonstrate how the subfloor is applied to the top of the floor joists;
- If the first floor frame is elevated off the ground, have the students brace the bottom of the first floor. Failing this the students can get practice bracing the underside of a floor system by bracing the second floor;
- When the load bearing walls are assembled and erected, the second floor can be laid out, marked and installed;

- Discuss the importance of aligning the second floor joists with the first floor wall studs, and make sure the students know the allowable tolerances for this alignment;
- Layout and assemble the second floor frame on top of the first floor load bearing walls;
- Install the subfloor using ladders and/or scaffold and brace the bottom of the second floor using blocking and flat strap bracing.

Materials and Equipment

Steel package required.

(Floor joists, track section, subfloor sheathing, flat strap bracing, web stiffeners, fasteners, joists for headers, bat insulation, 2x4 dimensional lumber for sill plate (anchored) and intermediate support beam(s), clip angles)

The standard package of power and hand tools will be required for the assembly discussed in this chapter. All personal protective equipment should be on hand and used by every student where appropriate.

A set of blueprints for the design house will be required and will give the students the opportunity to gain experience reading blueprints before laying out and assembling the floor. When the students are ready to begin with floor construction, it is suggested that they be broken up into small teams of two or three and work on their own section of floor.

A large flat area will be needed to place the wood sill plate as a foundation simulation. Concrete block could be used to elevate the entire floor structure, but the block should be secured to create a stable base for construction. Another alternative would be to anchor the wood sill plate to a concrete floor, ensuring a square, level platform on which to frame the first floor.

10. FLOOR JOISTS

10.1 Introduction

The first nine chapters of this *Residential Steel Framing Manual* provide the student with the background information and essential terminology associated with steel framing. They should now have an understanding of the materials, design processes, tools, and fasteners necessary for residential steel framing. Discussion surrounding some of the differences between wood framing and steel framing has taken place.

The next seven chapters deal with the layout and assembly of the basic framing elements of a residential structure: floors; load bearing walls; non-load bearing walls; and roofs. Each of these parts of the frame have one or more chapters dedicated to it, and provide detailed instructions for the framer.

Chapter 10 describes the layout and assembly of floor framing systems. This chapter is divided into the following sections:

Section 10.2: Floor Joist Orientation and Span
Section 10.3: Floor System Construction
Section 10.4: Installing Ground Floor Joists
Section 10.5: Floor Joist Bracing
Section 10.6: Second Floor Joists

The primary members of any floor system are the floor joists. Floor joists are the horizontal members that span between underlying supports, and support loads from above. The other parts of the floor system include the bracing, bridging, subfloor, and floor finishes.

The purpose of this chapter is to introduce the student to the design considerations for floor joist orientation, to familiarize the student with the layout, assembly, and bracing of floor systems, and to discuss the subfloor and floor finish considerations for steel framed floors.

10.2 Floor Joist Orientation and Span

The direction in which the floor joists run and the decisions regarding the use of a single or continuous span are important considerations for framing. Floor joist orientation and span length is normally the decision of the designer (architect, engineer, technologist). The framing contractor and framers should be familiar with the principles underlying the design of floor systems, so that they are aware of the impacts of any modifications which might be necessary during construction.

10.2.1 Span Direction

Joists can span between end walls (front to back), side walls (side to side) or in both directions in a house. The floor joist orientation will always be shown on the building drawings. The joist length and size may also be shown on the drawing and can also be determined by the prescriptive method described in *Chapter 4 Design Process* and *Chapter 6 Cut-List, Ordering, and Delivery of Steel.* The design house for this course uses floor joists primarily oriented from side to side with front to back joists supporting the kitchen and breakfast areas as was shown in Figure 4.5a.

The decision for orientation and span of floor joists is often a balance between economics, materials, and design. In a house the entire floor is divided into floor areas or sections. A floor section is any part of the floor bounded by foundation and/or intermediate underlying supports. The span orientation and length is usually aligned with the smallest dimension of that floor section in order to optimize load-carrying abilities of the floor, and minimize deflection and vibration.

The details (i.e. dimensions, materials, location, supporting points) of any intermediate supporting beams are normally specified by the designer. These support beams act to reduce the span length and the required depth and steel thickness of the steel floor joists. There will be trade-offs between clear span and floor joist depth, steel thickness, and cost. The choice of long spans between foundation walls and load bearing walls, or shorter spans over intermediate supports is normally a decision of the building owner and designer.

10.2.2 Single and Continuous Span Floor Joists

Single span joists span between two support points without any intermediate support(s). The prescriptive method contained in the *CSSBI Steel Framing for Part 9 Construction* provides a way for designers and framers to select only single span joists. The members selected in *Chapter 4 Design Process* were based on this CSSBI method, and the floor joist installation illustrated in this chapter assumes single span construction.

A continuous span joist is a single floor joist without cut or splice, that spans between two points with one or more intermediate supports. In general, a continuous span joist can be designed with less depth and may be thinner steel for the same loading conditions as several single spans.

This size reduction is due to a reduction in bending moment and deflection created by the intermediate supports along the joist.

Bending moment is the structural term used to describe the bending forces in the member that give rise to stress. The steel thickness and depth must be designed adequately to resist these stresses and to prevent significant deflection or bending (i.e. bouncy floors).

A professional structural engineer must be engaged to assess stress and deflection limits and determine joist member size (depth and thickness) for continuous span floor joists.

10.3 Floor System Construction

Having determined the joist spans and sizes for the design house (*Chapter 4 Design Process*), and having ordered the LSF members (*Chapter 6 Cut-List, Ordering, and Delivery of Steel*), and followed up with the foundation anchoring in *Chapter 9 Foundations*, residential steel framing can begin with the layout and assembly of the first floor system.

Construction consists of layout, assembly of the system elements including joists, rim joists, trimmers, headers, bracing and bridging, and installaton of the subfloor. The student is reminded that residential steel framing utilizes in-line framing techniques, so the layout of the first floor joists will be determined in part by the location and layout of the first floor walls.

Some assembly techniques for situations not handled by the design house are included in this chapter to complete the student's training.

10.3.1 Ground Floor Layout

The design house has a wood sill plate anchorage system and the student may want to refer to *Chapter 9 Foundations* to quickly review the techniques for attaching the wood sill plate to the foundation and the first floor rim joist to the sill plate. Complete the installation of the sill plates as required. Countersink the anchor nut into the wood sill if possible, and clip the anchor to make a flush sill surface. If this is not possible, the rim joist may have to be notched around the anchor bolts. Ensure that no anchor bolts will interfere with the placement of the floor joists.

Verify the outside-to-outside dimension for the floor joist spans and make adjustments to the sill plates as necessary. This is extremely important when floor joist members have been ordered cut-to-length and you want to avoid having to splice or cut the floor joists.

The floor layout begins with the installation of the rim joist and the marking of the floor joist locations. Starting at any corner of the ground floor:

- Mount a rim joist (joist-depth track section) normally 0.048 in. (1.22 mm) thick on the sill plate where the floor joists will end. Temporarily attach the rim joist using #8 screws fastened through the flange into the wood sill to position and hold the track in place. Splicing of this track section may be necessary. The technique for splicing track section is shown in Figure 10.1. With factory cut-to-length track, field cutting should not be necessary if the foundation and wood sill are the correct length.
- Check to make sure the rim joists are the correct distance apart by placing a floor joist at either end. There should be a 1/8 in (3 mm) gap between each end of the floor joist and the web of the rim joists to prevent squeaking.
- Using a felt marker, mark floor joist locations with a stroke on the track flange to indicate the position of the joist web, and an "X" on the side of the stroke mark to indicate the position of the joist flange.

- Mark the location of the rim joist at the end of the rim joist. The rim joist(s) is the floor joist member bearing on the wood sill plate at either end of the rim joist.
- Mark the location of a second joist, immediately next to the rim joist as seen in Figure 10.2. The double joist arrangement is necessary to support the exterior load bearing wall immediately above the subfloor. Note that the rim joist needs to be filled with insulation prior to installing the second joist.
- Assuming 16 in (400 mm) o/c framing spacing, the third joist in from the rim joists should be marked at 15 –3/16 in (386 mm) on the rim joist. This will ensure the subfloor sheeting covers half the width of the joist to avoid extra cutting and waste. For 12 and 24 in (600 and 800 mm) framing spacing, the marks would be at 11 3/16 and 23 3/16 in (589 and 284 mm) respectively.
- Similarly mark joist locations on the opposite rim joist or intermediate support. In the design house, ground floor joists within most floor areas, bear on a foundation sill and intermediate support or on intermediate supports.

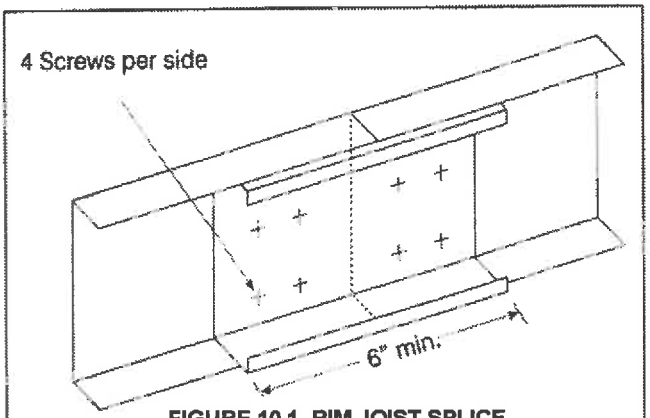

FIGURE 10.1 RIM JOIST SPLICE

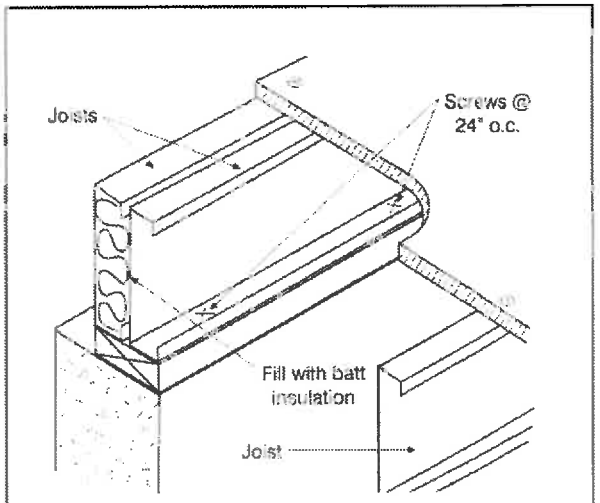

FIGURE 10.2 DOUBLE RIM JOISTS

- Where joists overlap an intermediate support beam, such as with J2, J5, J7, J8 in the design house, the joist webs should face in opposite directions on the beam as shown in Figure 10.3. Note the need for a clip angle between the two joists. This clip angle serves to attach the back-to-back joists to each other and to the support beam.

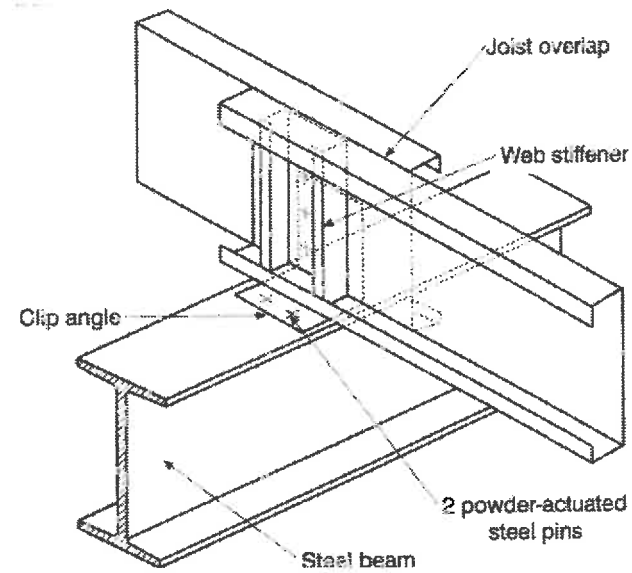

FIGURE 10.3 LAPPED JOISTS SUPPORTED ON A STEEL BEAM

- Another alternative to secure the floor joists to a support beam involves anchoring a section of joist or track section (with the flange down) along the support beam so that it overhangs the beam edges by at least 1 in (25 mm). The floor joists can then be attached to the overhanging edges using #8 hex washer self-drilling screws. Web stiffeners should still be used as shown in Figure 10.3.
- Where joists run parallel to an interior, non-load bearing partition wall, they must be doubled to support the wall as shown installed in Figure 10.4.

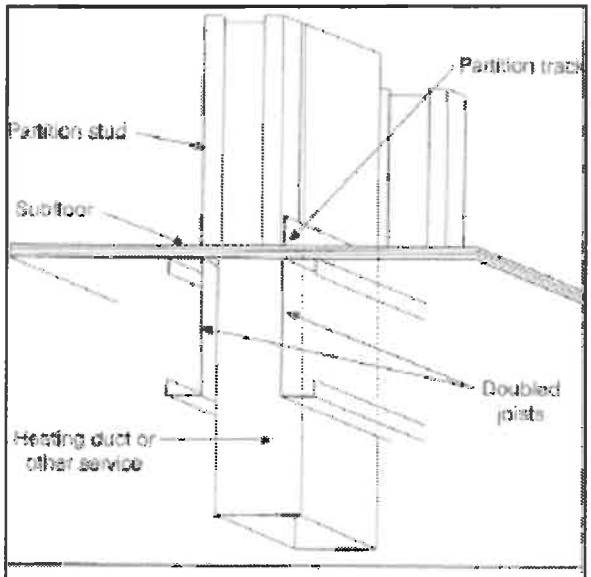

FIGURE 10.4 SUPPORTING PARTITION WALLS ON DOUBLE FLOOR JOISTS

- Examine the drawings to determine location of stairwell openings and possible foundation wall openings. Note the number and size of members required to frame the openings.

Joists are provided with pre-punched web knockouts that facilitate the installation of electrical and plumbing services. **The framer should examine the drawings to determine the location of toilet flanges, tub and shower drains, and other DWV services, and may have to alter floor joists to avoid later significant cuts to steel framing members that would then require remedial treatment.** Refer to *Chapter 19 Utilities- The Other Trades* for further guidance.

Once all the floor joist locations have been marked, the joists are then ready to be installed. A brief description about floor joist web stiffeners precedes the installation instructions.

10.3.2 Floor Joist Web Stiffeners

Floor joists must be provided with web stiffeners at all locations where a point load from an overlying load bearing wall or support, could cause web crippling in the joist.

Stiffeners have a nominal flange width of 1-1/4in (31 mm) in order to fit inside the joist section. They can be included in the steel order cut-list to save cutting time. Stiffeners can be field-cut from stock using a chop saw. If this is done they must be placed outside the joist.

A stiffener can be installed either inside the joist or on the back side of the joist web. Stiffeners are attached to the web with three #10 screws. A stiffener installed inside the joist should be cut to fit between the joist flanges, but not touch them, in order to reduce the possibility of floor squeaking. Figure 10.5 presents a view of a web stiffener and floor joist.

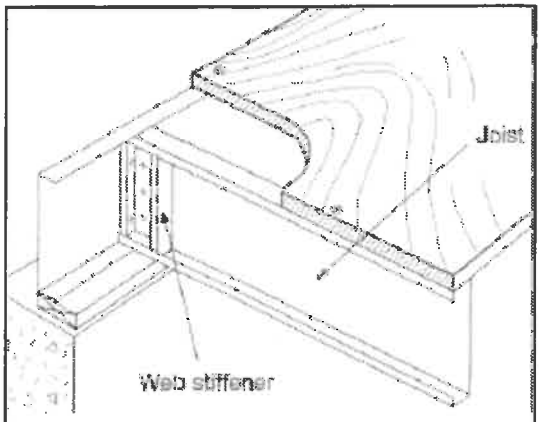

FIGURE 10.5 WEB STIFFENER

Normally, only one web stiffener is required. However, a joist under a built-up jamb assembly comprised of two or more stud members, must have two stiffeners, one on each side of the joist web as shown in Figure 10.6.

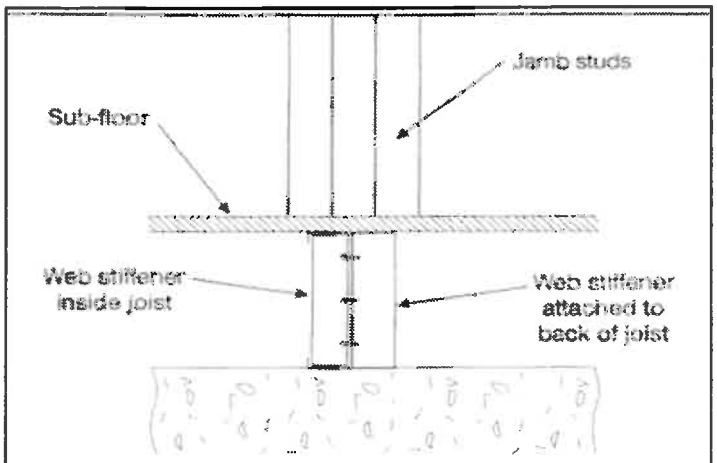

FIGURE 10.6 WEB STIFFENERS UNDER A BUILT-UP JAMB

An alternate arrangement for the double rim joists described in Section 10.3.1 is a single rim joist fitted with web stiffeners to support the overhead load bearing stud wall as shown in Figure 10.7. The web stiffeners must be aligned directly underneath the wall studs of the overlying load bearing wall.

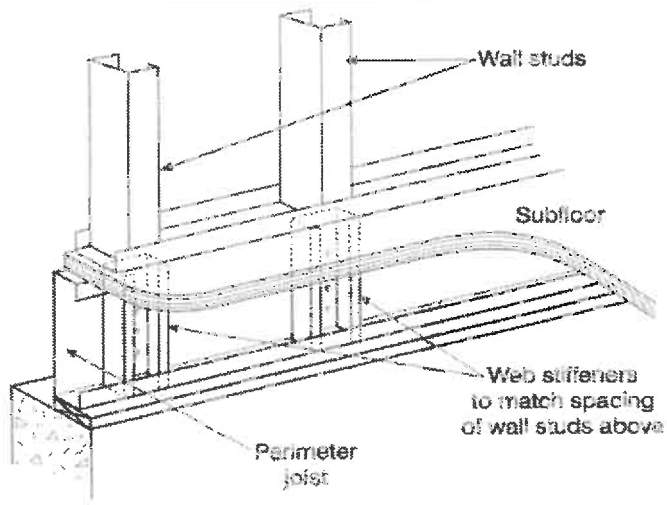

FIGURE 10.7 WEB STIFFENERS IN RIM JOIST

10.4 Installing the Ground Floor Joists

Once the layout and marking of the rim joists and intermediate support beams is completed, and the web stiffeners for the floor joists are ready, the assembly of the floor system may begin.

10.4.1 Assembling Floor Joists

Set the end of each floor joist into the rim joist making sure the flanges face the same direction and the web knockout holes are aligned. Hole alignment is assured if the coloured ends of the joists are at the same end of the span. Unlike wood framing materials, LSF members do not have a camber (crown), therefore there is no "top" or "bottom" when placing the joist into the rim joist.

Each joist must fit inside, but not touch the web of the rim joist, in order to avoid rubbing metal and a resultant squeaking noise when the floor carries live loads. Allow 1/8 in (3 mm) clearance at each connection. The joist cut-to-length order should allow for this, but if it does not, compensate by adjusting the rim joist. If the channel can't be moved the joist will need to be field-cut. This special requirement of steel frame floor assembly should be checked before the rim joist is permanently attached to the wood sill plate.

When placing a joist in the marked location, check the alignment with a square and use two low profile head screws to fasten the web of the rim joist into the flange of a joist web stiffener. Then fasten the web stiffener to the joist and complete the assembly by screwing the top flange of the rim joist to the top flange of the joist using a low profile head screw. This detail was shown in *Chapter 9 Foundations*.

Start by installing the rim joist. When using double rim joists, insulation must be placed between them before the cavity is closed with the installation of the second joist. Continue setting and installing joists across the floor area, keeping the web facing the same direction.

When lapped joists of adjacent spans meet at the intermediate support beam, they are to be strengthened by a single web stiffener and are connected together with a clip angle that has one leg sandwiched between their back-to-back webs (as shown in Figure 10.3). The other leg of the clip angle leg is fastened to the beam with powder actuated steel pins or to an overturned track or wood plank with self drilling screws as shown in Figure 10.8.

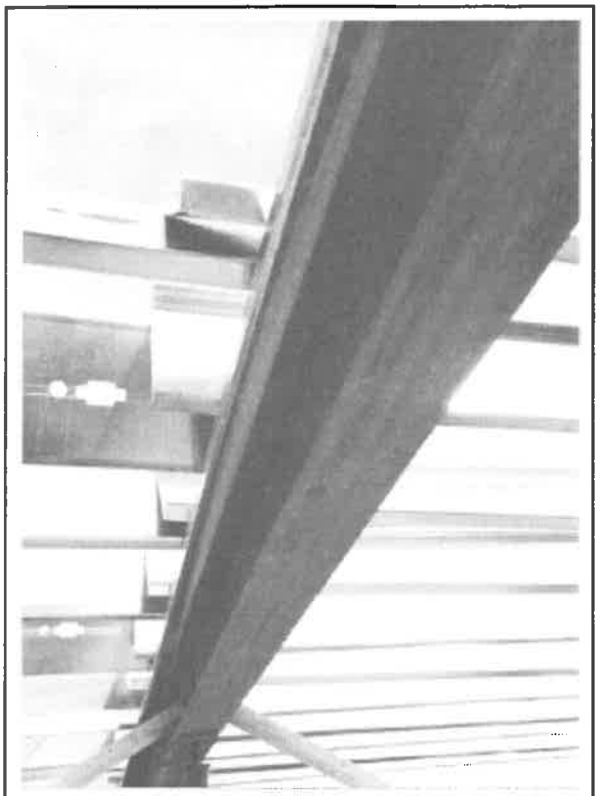

FIGURE 10.8 OVERTURNED JOIST SECTION ON STEEL BEAM

10.4.2 Openings in Foundation Walls (Basement Windows)

Where there is an opening in a basement wall for a window, a lintel is required to span the opening, support the floor joists, and carry the overhead load bearing wall. A common practice is to use a reinforced steel window frame to act as the lintel. This is often a very economical framing method, however, lightweight steel framing members can be used to construct a lintel as illustrated in Figure 10.9. The lintel assembly is made with header joists similar the requirement for floor openings (see Section 10.4.3). Two joist members are attached back-to-back and a rim joist is attached to the interior side of the lintel. This whole assembly fits over the window opening and is attached to the rim joist. Floor joists are attached to the interior face of the lintel with clip angles. The following procedure is recommended for this assembly:

- Assemble the two header joists back-to-back with two rows of #8 screws at 6 in (150 mm) o/c;
- Pack the inside of both of the header joists with insulation and attach a joist track section to the assembly through the top and bottom flanges of the header joist with #8 screws at 6 in (150 mm) o/c;
- Place the lintel assembly into the rim joist over the opening, making sure that it bears on the sill or foundation top;

- Attach it to the top flange of the rim joist with #8 screws at 6 in (150 mm) o/c;
- The floor joists framing into the lintel are attached with clip angles and fastened with six #8 screws - three into the joist web and three into the lintel track;
- Note that web stiffeners are not needed in the floor joists at this location because the overlying load bearing wall will rest on the lintel and not the floor joists.

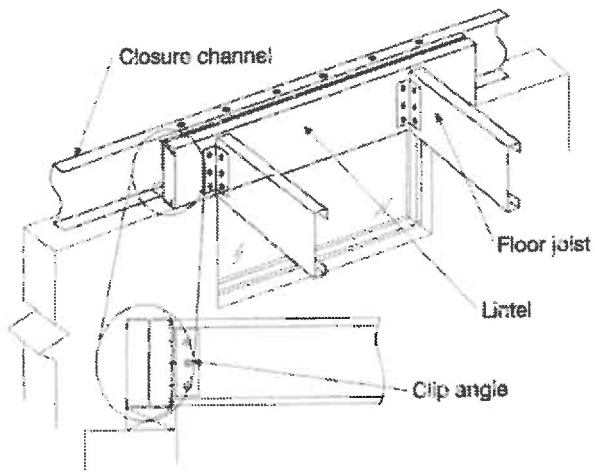

FIGURE 10.9 FRAMING OVER BASEMENT OPENINGS

10.4.3 Floor Openings

Floor openings, such as stairwells and balconies, are framed with trimmer and header joists as shown in Figure 10.10. The methods for determining the size and number of headers and trimmers were discussed *in Chapter 4 Design Process* using the *CSSBI Member Selection Tables.* The trimmer joist assembly is similar to other back-to-back joists and track section as described previously.

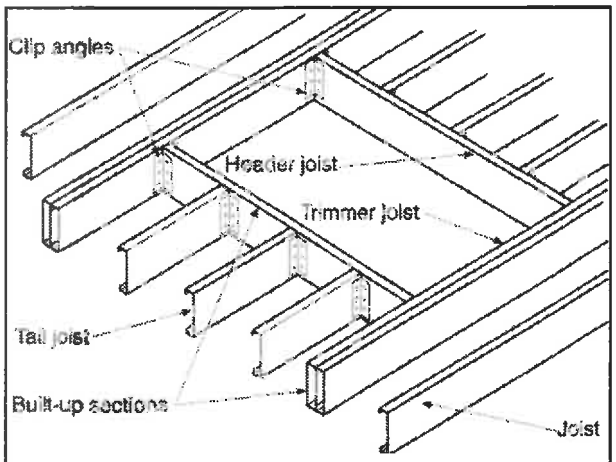

FIGURE 10.10 FRAMING FLOOR OPENINGS

Joists and joist track sections used to make headers and trimmers should be of equal thickness and fastened together with appropriate screws at least every 24 in (600 mm) o/c. Low profile head screws should be used on the top flanges to avoid bumps in the subflooring.

Trimmer joists at an opening should form a closed box section as shown in the built-up sections in Figure 10.11. The most straight forward trimmer is where the joist is nestled in the joist track to provide a flat surface to connect the headers. The trimmer joists and track sections must be full span length and cannot be spliced.

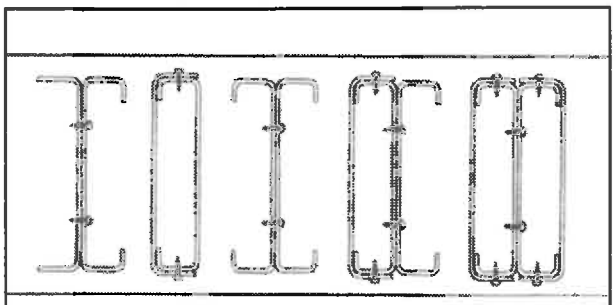

FIGURE 10.11 BUILT-UP SECTIONS

The header to trimmer connection is made with clip angles as are the tail joists to the header as shown in Figures 10.10 and 10.12. The clip angles should be made from steel of 0.060 in (1.52 mm) minimum thickness. The number and length of the clip angles, and the number and size of screws for the connection are shown on the connection specifications found in Figure 10.13.

The connection specification, reproduced from the CSSBI *Installation Manual,* has a designation to indicate the connection layout (H1, H2, H3, H4, 2H1, 2H2, 2H3, 2H4). This designation should be shown on the floor plan. If it is not on the plans, it can be determined from Table 5.4.7 in the CSSBI *Installation Manual.*

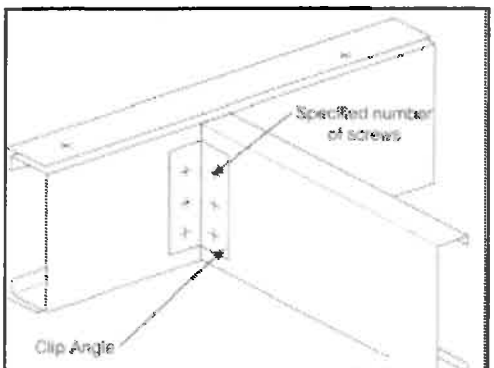

FIGURE 10.12 CLIP ANGLE CONNECTION

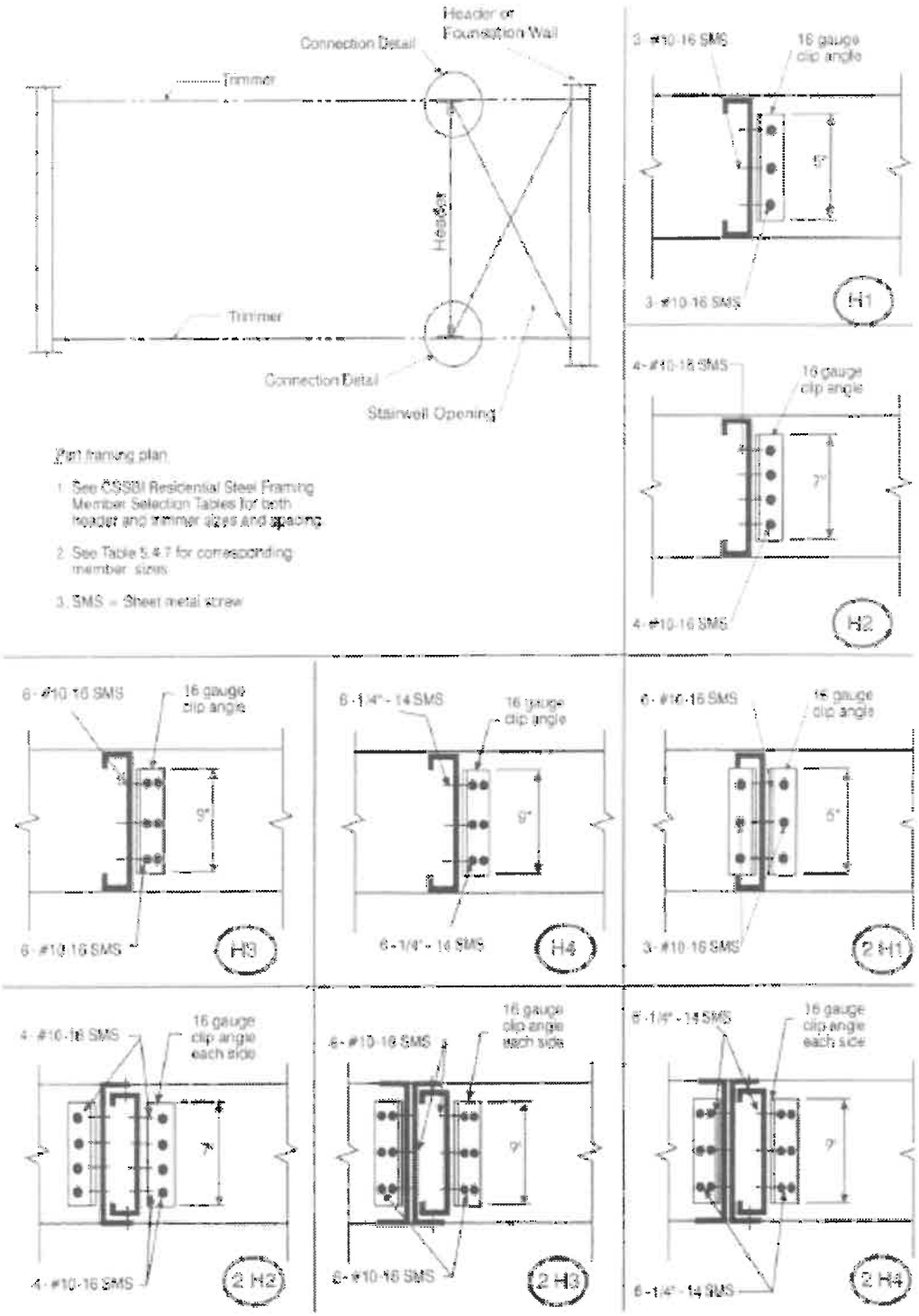

FIGURE 10.13 HEADER CONNECTIONS FOR FLOOR OPENINGS

The tail joists are fastened to headers using a clip angle with three #10 screws into the tail joist and three #10 screws into the header.

10.4.4 Continuous Spans

As mentioned in Section 10.2.2, continuous span joists are not included in the *CSSBI Member Selection Tables.* A structural engineer must been engaged to design the continuous span steel joist members. A detail for the connection at a steel beam supporting a continuous span is provided in Figure 10.14. Note that both a clip angle and a web stiffener are needed at the support beam.

A section of overturned track or joist attached to the steel beam can also be used to secure the floor joist. This was illustrated in Figure 10.8.

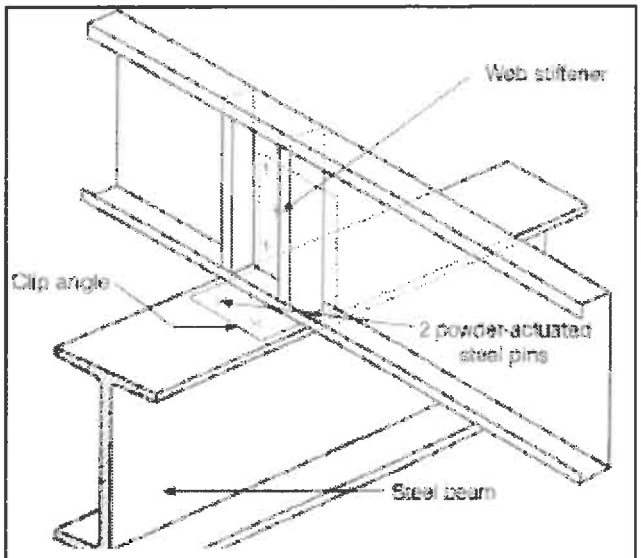

FIGURE 10.14 CONTINUOUS JOIST SUPPORTED ON A STEEL BEAM

10.4.5 Cantilever Floors

Occasionally a floor will cantilever out beyond a support as is the case with a large bow or bay window and balconies. Engineering services are required for cantilevers for purposes of sizing the joists, providing framing details and ensuring adequate corrosion protection and providing adequate resistance against thermal bridging.

FIGURE 10.15 CANTILEVER FLOORS

10.5 Floor Joist Bracing

Bracing of the floor joists is necessary in order to stabilize them and prevent them from rolling during construction. The steel C-section shape of floor joists is asymmetrical (an uneven section geometry about the vertical axis) and will have a tendency to twist when under load if it is not braced.

Avoid walking on floor joists until they have been properly braced. Even after installation of the subfloor, it is best to install the bottom flange bracing before applying major loads such as storage of heavy materials like drywall or flooring materials.

10.5.1 Bracing the Top of Floor Joists

The top flanges of the joists are considered fully braced when the subfloor sheathing is installed. *Part 9 NBCC* requirements for subfloor type, thickness and fastening can be adopted for steel joists.

The subfloor sheathing is fastened to the top flanges of joists using #8 x 1 1/4 in (31 mm) bugle-head screws spaced 6 in (150 mm) o/c along the sheet edges and 12 in (300 mm) elsewhere in the field. The minimum edge distance for fasteners is 3/8 in (10 mm). Adhesive can be used to improve the connection, but care should be exercised to ensure the adhesive does not harden before the subfloor is securely fastened to the floor joists.

A worker should only walk on, and work from, subfloor that is securely fastened to joists.

To speed up the installation of the subfloor, the sheathing can be glued and air-nailed to tack the subfloor sheets in position. The screwing of the entire floor can follow later.

10.5.2 Bracing the Bottom of Floor Joists

The bottom flanges of the floor joists also need to be braced. Figure 10.16 shows a braced and blocked floor.

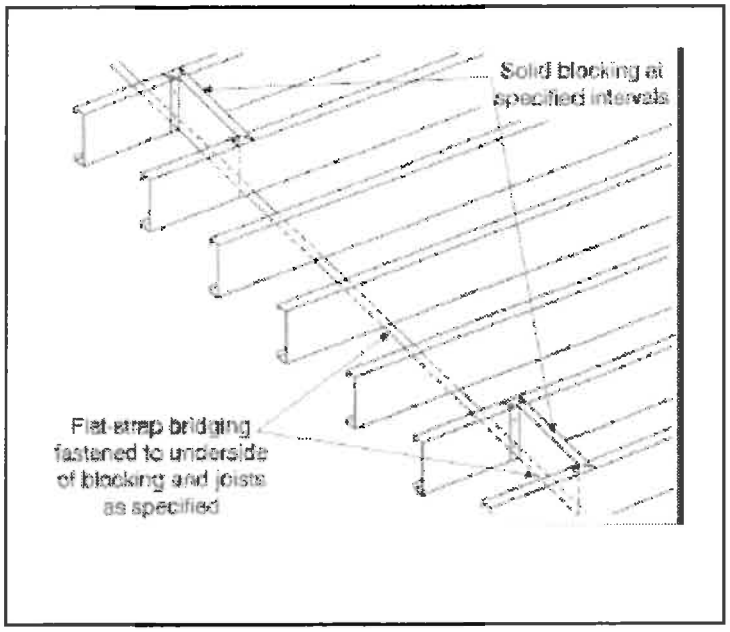

The most common bridging for floor joists is solid blocking, installed periodically between the joists. Blocking serves to further stabilize the floor joists and acts as an anchor to fasten the flat strap bracing.

Flat strap or notch channel bracing must be fastened without slack to the bottom flange of each joist using at least one #8 screw. Flat strap bracing is the most common and should be at least 1 – 1/2 in wide x 0.033 in thick (38 x 0.84 mm) and spaced not more than 8 ft (2400 mm) from the foundation wall, intermediate joist support, or adjacent row of bracing. The end of the flat strap bracing should be fastened to the blocking with at least four #8 screws. Strapping can also be anchored to an exterior wall.

FIGURE 10.16 FLOOR BRACING AND BLOCKING

C-section blocking is installed between floor joists at a maximum spacing of 8 ft and at the termination of all bracing straps. Blocking can be a section of joist measured and cut to fit between the webs of adjacent joists. Typically a 6 in (152 mm) deep section is used to block 8 in (203 mm) deep joists. The blocking is attached with clip angles using two screws per angle leg as illustrated in Figure 10.17. If flat strap bracing is to be attached to the blocking, the blocking must be installed with the bottom flange flush with the bottom of the floor joists.

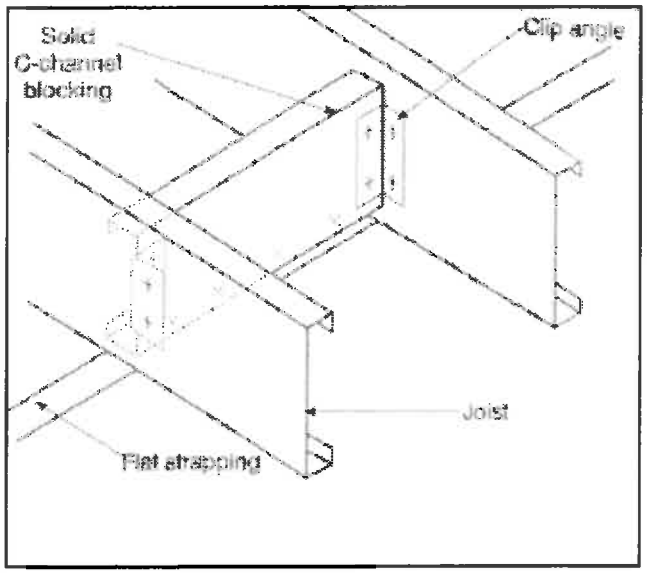

Alternately, a measured and cut piece of track section can be used for blocking. The flanges can be cut and the web bent back to make a connection as illustrated in Figure 10.18. Use low profile head screws to attach the track section flange to the flange of the floor joist.

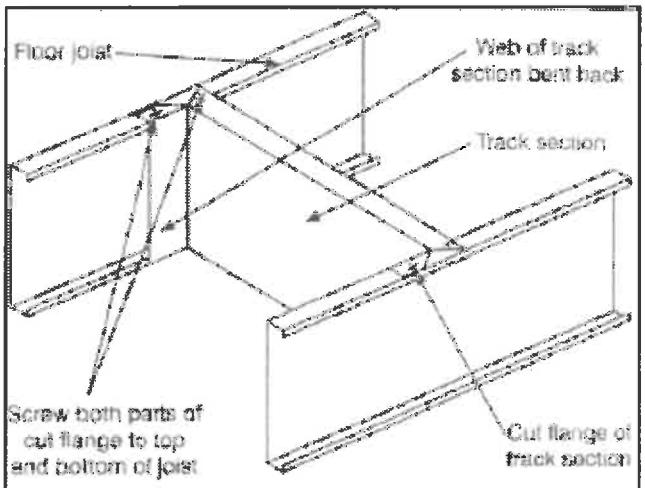

FIGURE 10.18 TRACK SECTION BLOCKING

10.5.3 Stretching Flat Strap Bracing

A simple "stretcher" for flat strap bracing can be fabricated using a C-clamp and 1 in (25 mm) wide strips of steel material. Loop the steel strips around each 'C' part of the clamp, fastening one strip temporarily to the flat strap bracing, and the other strip to a solid part of the frame. Closing the C-clamp will pull the flat strap tight enough for screwing. A schematic of this simple stretcher is shown in Figure 10.19.

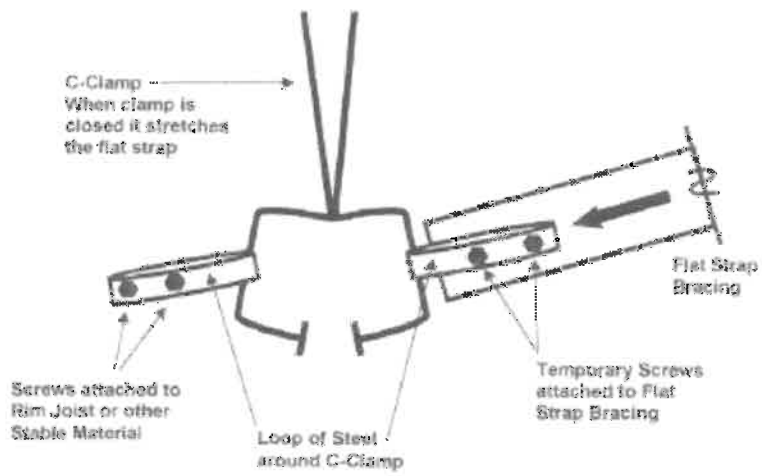

FIGURE 10.19 FLAT STRAP BRACING – C-CLAMP STRETCHER

10.6 Second Floor Joists

After the load bearing walls on the first floor have been framed, erected, and all temporary and permanent bracing is securely in place, framing of the second floor can proceed.

Second floor joists are installed in much the same manner as the first floor. There are a few exceptions and modifications. Because the workers cannot walk on the top track of steel framed walls, second floor joists must be installed from below using ladders or scaffolds. The first floor subfloor and bracing must be in place before erecting the second floor joists. This means that the subfloor must be completely fastened down in all areas where overhead joists are to be erected.

The second floor rim joist is attached to the top track of the load bearing wall as shown in Figure 10.20 and the floor joist locations are marked on the top flange. The web of each joist must align with the web of the first floor load bearing stud underneath within the 3/4 in (19 mm) allowable tolerance as discussed in *Chapter 4 Design Process.*

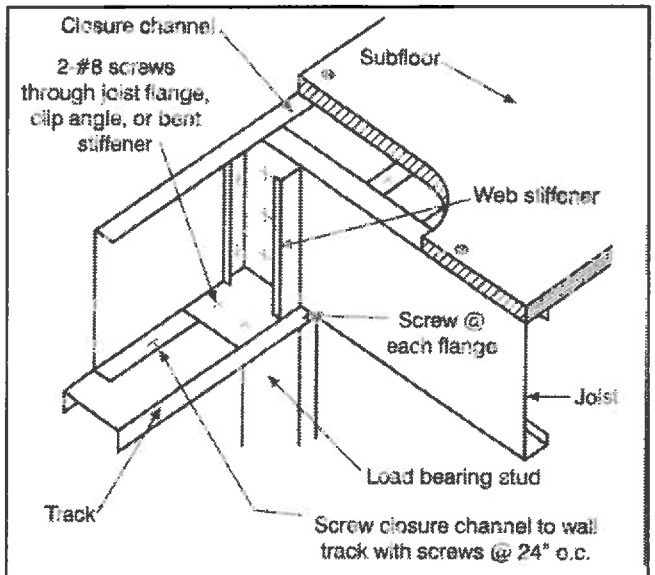

FIGURE 10.20 SUPPORTING FLOOR JOISTS ON LOAD BEARING WALLS

Where floor joists are parallel to an exterior wall, two joists can be used to transfer loads to the top track of the lower wall similar to the technique used for the first floor as shown in Figure 10.2. Each joist can be fastened to the top track using #10 screws at 16 in (400 mm) o/c through each joist flange. If a single joist is used, the web must be stiffened at each stud location similar to the first floor as shown in Figure 10.7.

Lapped joists supported on a load bearing wall must be connected to the top track of the wall with 2 - #8 screws through the flanges of each joist. A web stiffener must be attached to one of the joists with #10 screws as shown in Figure 10.21.

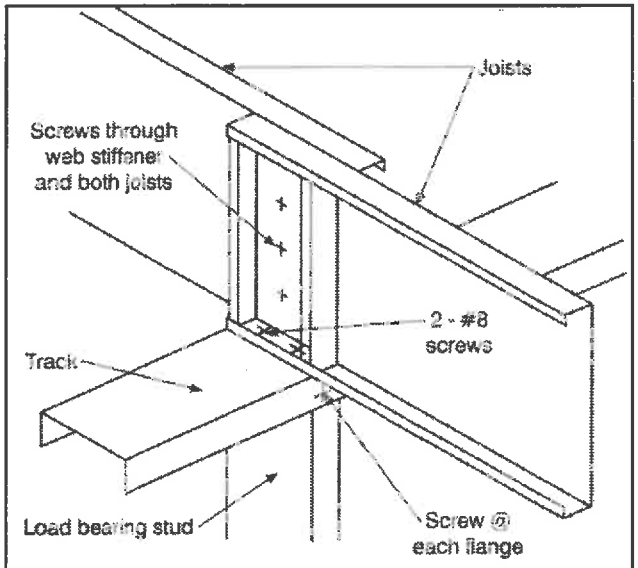

FIGURE 10.21 LAPPED JOISTS SUPPORTED ON A LOAD BEARING WALL

The second floor subfloor is attached and braced in a similar manner as the first floor subfloor. The first section of subfloor will have to installed and securely attached to the second floor joists using ladders or scaffolding. The framers can then use this as a platform to complete the rest of the second floor subfloor. The underside of the second floor must be braced and blocked. Low profile head screws should be used for bracing and blocking to permit the installation of ceiling drywall.

11. LOAD-BEARING WALLS

Chapter Objective

This chapter discusses the methods for load bearing wall assembly, header assemblies, rough opening framing, wall bracing, and other considerations for the LSF building. While there are some similarities between wood and LSF load bearing wall layout and assembly, LSF has specific details that require attention. Recommended procedures are to be described first by the instructor and then practiced by the student.

It is recommended that students be reminded of the health and safety aspects of LSF prior to any work with the material and power tools. The importance of in-line framing cannot be emphasized enough in this chapter. Students must understand the need for wall studs and floor joists to be aligned in order that the structure will support the loads it has been designed to carry.

Specific Learning Objectives

After completing this chapter, the student should be able to:

Objective 11.1: Describe the importance of in-line framing of load bearing walls and floor joists with respect to the overall structural integrity of the building;

Objective 11.2: State why wall studs must fit tightly into both the top and bottom tracks (U-sections) of a load bearing wall;

Objective 11.3: State some of the benefits of panelized construction for load bearing walls compared to traditional stick-built construction.

Objective 11.4: Given a set of blueprints, and working in a small team (two or three), demonstrate the ability to lay out and assemble LSF load bearing walls in an appropriate manner, paying particular attention to the following details of layout and assembly:

- identify and select the correct size of wall track, wall studs, fasteners and other material that should be used according to plans;
- layout the wall on a panel table or other appropriate platform that is consistent with in-line framing techniques;
- mark and frame a rough opening for a window, door, and wall opening;
- build a header and install it in a rough opening;
- state the purpose for wood bucks in a rough opening and install them in the appropriate manner;
- correctly locate and install the studs necessary for corners and intersecting walls;
- recognize the importance of aligning punchouts in a wall;
- properly brace a LSF load bearing wall using both structural sheathing (OSB or plywood), and horizontal and diagonal flat strap bracing according to LSF guidelines;
- erect an assembled LSF load bearing wall, ensuring it is plumb and level, anchor the wall to a subfloor and install temporary bracing;
- demonstrate how intersecting walls are tied together using both the overlapping top plate and gusset plate techniques;
- splice wall track together.

Objective 11.5: Demonstrate the ability to select and use the appropriate fasteners and fastening systems for load bearing wall assembly;

Objective 11.6: Identify where insulation must be installed in voids during the assembly of walls, openings, headers, etc.

Objective 11.7: Understand that all parallel walls should have their studs installed with the web facing the same direction;

Objective 11.8: State the purpose of the following types of bracing on load bearing LSF walls:

- horizontal flat strap bracing
- diagonal flat strap bracing
- exterior structural sheathing
- temporary wall bracing

Objective 11.9: Describe balloon framing and its limitations in LSF construction.

Suggested Activities

The recommended format of training is classroom discussion followed by hands-on construction of load bearing LSF walls. A panel table or other platform such as a floor system with joists should be constructed for the walls to be built on.

For load bearing walls the entire layout and assembly process must be explained first, prior to the students attempting to lay out and assemble the wall. To address the specific learning outcomes in the above objectives make sure that the following points are covered in the classroom discussion and wall assembly:

- using a set of blueprints, explain the length of the wall panels being framed and why the lengths were chosen;
- explain how in-line framing dictates the stud layout;
- show how the top and bottom track is temporary clamped together;
- if the wall is assembled on a floor platform, discuss the need to screw the exterior side first, then prop up the wall and finish the fasteners (stud to track) on the interior of the wall;
- illustrate how the wall is marked for layout and have the students layout the walls and assemble them;
- show how to mark for rough openings; include at least one window, one door, and one wall opening;
- explain how the headers are built and let the students assemble both an open and box lintel and install them into the wall;
- show how to install a header in the wall and how to complete a rough opening, then let the students complete the rough openings;
- explain how the wall corners and intersecting walls are designed and how to layout and mark the extra studs needed for the corners;
- discuss the importance of aligning punchouts in all wall studs including king, jack, and cripple studs;
- show how to check a wall for squareness by diagonally measuring a wall before it is lifted into position;
- show how the walls are temporarily braced to preserve squareness of the wall;
- explain the importance of making sure all the fasteners are applied before taking the wall out of the table;
- have the students build at least two exterior walls and one intersecting wall;
- discuss with the students how to prepare to erect the walls and have temporary bracing ready;
- assist the students in erecting all the walls and bracing them; show the students how to plumb, level, and connect intersecting walls together.
- show the students how to make a flat strap "stretcher" and how to install horizontal and diagonal flat strap bracing;
- have the students attach structural sheathing to the walls;
- explain how the walls would be anchored on a real house.

Materials and Equipment

The load bearing wall framing material was listed under the steel package in Chapter 10 Floor Joists. The standard package of power and hand tools will be required for this Chapter. All personal protective equipment should be available and used by every student.

A set of residential blueprints would be beneficial for reference, and give the students an opportunity to "read" the blueprints before laying out and assembling the load bearing walls. When the students are ready to begin with wall construction, it is suggested that they be broken up into small teams of two or three and work on their own sections of wall.

11. LOAD BEARING WALLS

11.1 Introduction

A **load bearing wall** is any wall that is designed to carry an axial load, a wind load, or a combination of both loads. For the purposes of this document, load bearing means *axial load bearing and/or wind load bearing*, which differs slightly from the definition used in the *NBCC.*

After the main floor joists have been placed on the foundation walls and the subflooring has been fastened down, construction may begin on the load bearing walls. These are the walls that carry the live and dead loads created by the the house structure, the occupants, and the climatic conditions. Load bearing walls are subject to overhead loading caused by the weight of the structure, the occupants, and roof snow. These walls must also resist lateral loading caused by wind and seismic (earthquake) disturbances.

This chapter discusses the methods for load bearing wall assembly, header assemblies, rough opening framing, wall bracing, and other considerations for the LSF building. The discussion is divided into the following sections:

Section 11.2: General Requirements and Considerations
Section 11.3: Wall Layout and Assembly
Section 11.4: Lintel Assembly
Section 11.5: Wall Bracing
Section 11.6: Balloon Framing

The student is referred to the following sections of this document which have will some bearing on the layout and assembly of walls:

Chapter 8: Fasteners
Chapter 10: Floor Joists
Chapter 12: Roof Rafter Framing
Chapter 13: Roof Trusses
Chapter 16: Non-Load Bearing Walls
Chapter 17: Thermal, Vapour, and Air Barriers
Chapter 19: Utilities – The Other Trades

11.2 General Requirements and Considerations

This section discusses the general requirements for load bearing wallls and other considerations that require attention prior to laying out and assembling the load bearing walls of a structure.

11.2.1 In-Line Framing

In-line framing governs LSF load bearing wall layout. In-line framing means that the webs of studs and joists must be placed in vertical alignment with each other throughout the entire structure, within a tolerance of 3/4 in (19 mm). In general this in-line framing rule applies to studs bearing on joists. However the addition of a sub-floor on top of the joist may provide sufficient load transfer to allow a larger excentricity. For specific limits in this regard consult a design engineer.

Similiarily the second floor joists must bear directly on the studs in the wall beneath, and the second floor load bearing stud walls must have their studs aligned directly above the second floor joists. Figure 11.1 demonstrates this principle showing allignment of the studs in the first and second floor walls.

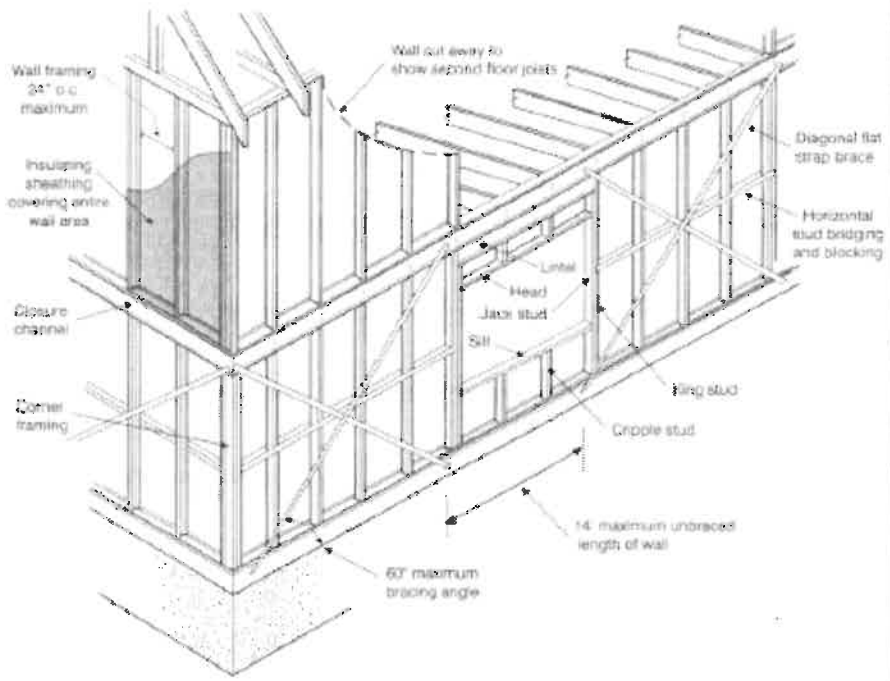

FIGURE 11.1 IN-LINE FRAMING OF GROUND AND SECOND FLOOR LOAD BEARING WALL STUDS

11.2.2 Track Sections

Track is the **U-section** that is similar to a stud but does not have the stiffening lips on the flanges. Track is used for **top and bottom plates** in the wall assembly. Since framing members support loads by bearing directly on each other, it is essential that each wall stud fits tightly into the top and bottom track member. In this manner, the top track bears directly on the stud beneath for full transfer of axial load into the stud, and the stud bears directly onto the bottom track for full transfer through the subfloor and onto the floor joist beneath.

The top and bottom wall tracks must be of equal or greater thickness than the studs. In the cut-list in Chapter 6, the wall track was ordered the same thickness as the wall studs.

11.2.3 Wall Assembly and Erection

The most common method of building a LSF load bearing wall is to lay it out and assemble it on a horizontal platform (usually provided by each floor). Once the wall has been framed, it can be tilted up into place similar to the method used to erect wood frame walls. It is usually more efficient to install bracing and exterior sheathing and/or rigid insulation to the assembly before it is tilted up. The interior bracing, cavity insulation, vapour barrier and interior drywall are normally installed after the wall has been raised into place.

Since most steel framing members are joined at the flanges, the connections for walls tend to be on the exterior and interior face of the frame. Because the wall is assembled on its side, fasteners can only be placed on one side at a time. Then the frame needs to be flipped over to fasten the other side. With practice however, a good framing crew can make these connections on the one side, tilt the frame into a vertical position, brace the wall, and then complete the connections on the other side.

To prevent the bottom of the wall from sliding, pieces of wood screwed to the outside of the rim joist can be used as a stopper mechanism.

11.2.4 Panelization

Panelization is the process of assembling walls, floors, or trusses before they are installed in a house.

LSF walls, floors and trusses can be assembled in a factory or at the job site on a specially constructed table called a panel table. This method of construction may be a viable option given sufficient quantity and repetition to warrant the cost of a panel table. It may be particularly cost effective in large projects with repetitive framing details. Panel tables must be flat and square on site and can be temporarily located under shelter to allow assembly during inclement weather. Panel tables are available commercially or they may be assembled on site.

A panel table may be constructed from Strut Products. Strut is a generic, reinforced steel channel which is available with a complete line of accessories, brackets and hardware. Strut is available from any electrical or mechanical supply house. The strut may be used for the top and legs of the panel table. The open slot in the strut is used to attach the location retaining brackets which hold the steel framing components in place on the table. Brackets are available to connect the channels and act as bases for the legs of the table. Strut spring nuts slide and lock inside the channel to hold the brackets in place.

Toggle clamps (available from any industrial supply house) may, if desired, be used for quick adjustment and locking of the retaining brackets used to locate the steel framing components on the panel table.

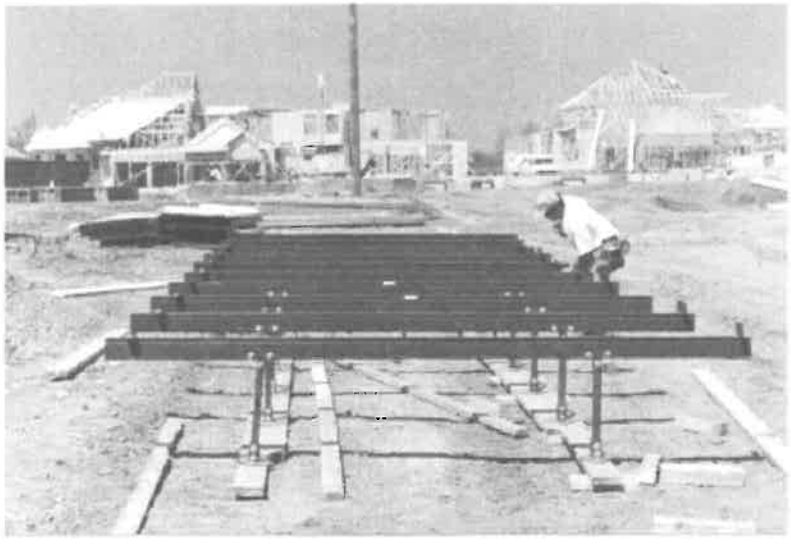

FIGURE 11.1a PANEL TABLE AT SITE

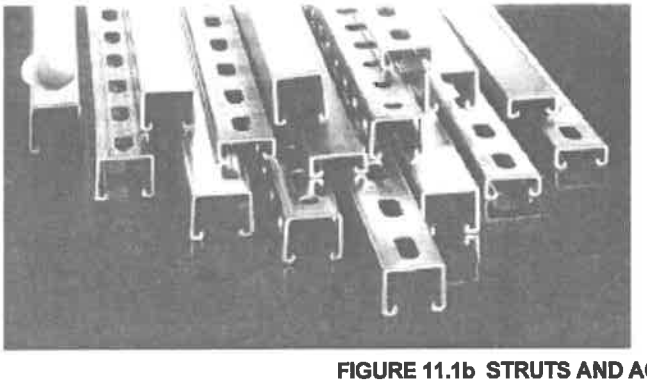

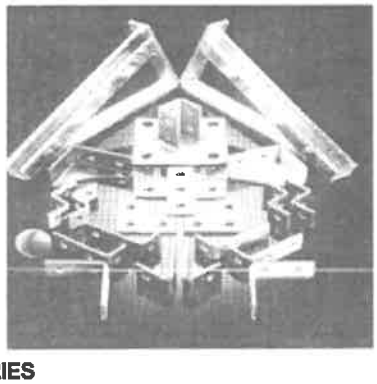

FIGURE 11.1b STRUTS AND ACCESSORIES

Panelization lends itself to "assembly line" methods and greater quality control potential of the assembly. Panelization also results in consistently straight walls and rapid assembly.

11.2.5 Wall Length

Since LSF members can be roll formed to any desired length, track length theoretically is only limited to the width or depth of the house. The practical limit for track sections, however, will depend on manufacturer handling, provincial transportation restrictions and the number of framers available to handle the material.

A framing crew will quickly determine what wall length is practical. The length of the wall should be conveniently handled by a two-person framing crew. If short wall sections are more desireable from the perspective of the labour needed to lift them, the sections can easily be spliced to complete a full length wall (see Section 11.4.3 Splicing Track and Studs). Another technique to lift long walls is to use a wall jack similar to that used in wood framing.

11.3 Wall Layout and Assembly

Following the principles of in-line framing, load bearing wall stud location is primarily governed by the layout of the floor joists below. Other factors affecting stud location include window, wall, and door openings. A detailed description for wall layout and assembly is given in the following sections.

11.3.1 Basic Wall Layout

Time should be spent marking the location of the bottom track on the floor and the location of the studs in the assembly. This will decrease the chances of error in design, and will often result in faster assembly of the wall. The following procedure is recommended for wall layout:

- mark the location for the bottom track of the wall on the subfloor;
- whenever possible cut equal lengths of top and bottom track (U-section) for the full wall or section length being laid out;
- place the top and bottom track members on the subfloor, along the line where the wall is to be erected;
- arranged the top and bottom track webs back to back and temporarily clamp them together;
- using a felt tip marker and noting the location of the first floor joist, place a layout line for the wall stud on the flanges of the top and bottom tracks;
- place an "X" on the side of the line to indicate the location of the stud flanges (see Figure 11.2.);
- similarly mark the next stud location corresponding to the next joist location (normally 16 in. (400 mm)) below it and continue marking the full length of the wall or section;
- mark all openings in the wall on the tracks noting the required number of king and jack studs (see Section 11.3.3 Window, Wall and Door Openings);
- double studs may be necessary at connection points for diagonal bracing (see Section 11.4.2 Diagonal Wall Bracing).

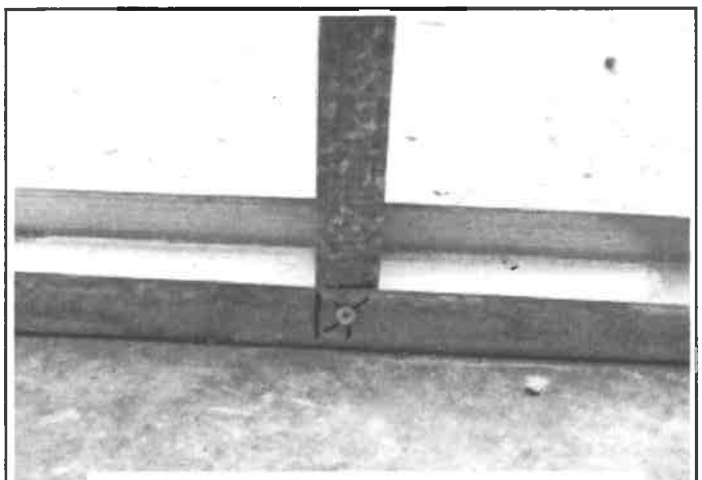

FIGURE 11.2 WALL LAYOUT

11.3.2 Framing Corners

At all corners, one additional stud must be added to provide support for the drywall.

- if the wall runs to the edge of the subfloor where it meets a corner, provide a mark for a corner stud 5-5/8 in. (143mm) back from the end of the track (see Figure 11.3) to allow insulation to be inserted into the corner space;
- a wall that runs to the edge of the subfloor has an extra stud at right angles to the reqular studs with the web facing the interior for use as a backer for drywall installation;
- two possible stud details at a wall end are shown in Figure 11.3;
- backer studs will also be necessary where interior walls frame into the exterior wall;
- adjoining studs in corners should be connected with #8 screws at 24 in. (600mm) o/c;
- when joining two walls, cut one of the top tracks and lap it over the other top track. Fasten the lap with 4 - #8 screws. A gusset plate may also be used to attach the two top tracks together.

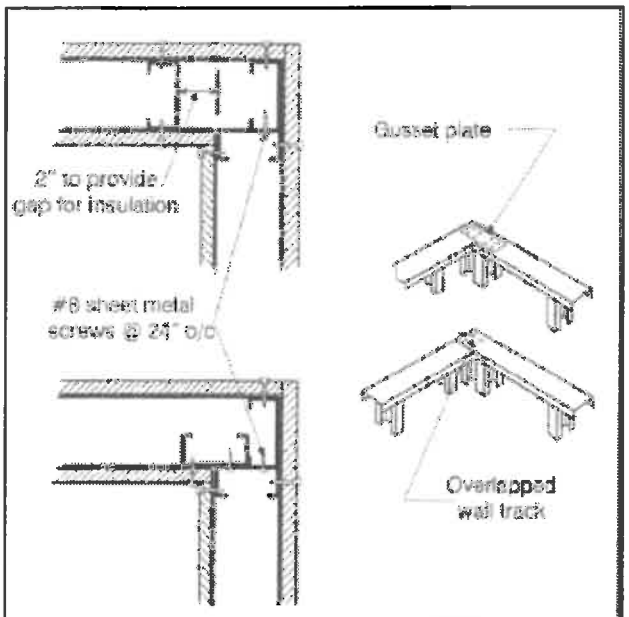

FIGURE 11.3 FRAMING CORNERS

11.3.3 Intersecting Load Bearing Walls

Where a load bearing interior wall intersects an exterior wall, such as a ceiling joist-supporting wall, lateral support is required for the interior wall and backing is needed for the drywall finish. The framing detail here is similar to the more common case of intersecting non-load bearing walls described in Chapter 16.4 Intersecting Walls. The track section blocking in the exterior wall should be at least the same thickness as the intersecting wall stud. The stud-to-track connection should use 2 #8 screws at 24 in (600 mm) o/c.

11.3.4 Window, Wall and Door Openings

The dimensions for window, wall and door openings are normally identified or detailed on an architectural drawing and should be located using this information. If the opening dimensions are not shown, obtain them from the architect or other authority. **To avoid error, do not attempt to scale them from the drawings.**

- refer to the architectural drawings and layout the window, wall and door openings from the drawing;
- mark the location for the **center of the openings** on the top and bottom tracks using a red felt tip marker, to distinguish these marks from the stud layout marks;
- determine the door and window sizes from the drawings and verify with the actual sizes of doors and windows if delivered to the site;
- determine the number of king and jack studs for each opening using the instructions provided in Chapter 4 Design Process. Add 3-5/8 in. (92 mm) for each king and jack in the opening assembly. If a wood buck is used for the opening, allow for its thickness, usually a nominal 2x4 at 1-1/2in (38 mm);
- using a tape measure, center the opening dimension over the centre line red mark on the track, and mark the location of the web of the king stud, with a line mark and large "X" on the line, at the end of the tape measure. A jamb of a single king and jack should be assembled back-to-back as shown in Figure 6.4.1b in the CSSBI *Installation Manual*. If the jamb has double kings, they should be assembled back-to-back. The jack in a double king assembly can be fastened to a track section which in turn has been fastened over one of the king studs (similar to the detail in Figure 6.4.4b in the CSSBI *Installation Manual*).
- mark both the top and bottom tracks;

11.3.5 Wall Assembly

After the wall layout is completed, the wall can be assembled in the following manner:

- separate the top and bottom tracks;
- place a stud into the top and bottom tracks at each end of the wall;
- clamp the stud flanges to the track flanges with locking C-clamps;
- tap the track on one end with a hammer or drywall ax to seat the top and bottom of the studs as tightly as possible in the track;

  It is important to seat the studs into the track as tightly as possible. This ensures load transfer through the studs and not the fasteners and helps to maintain wall straightness.

- orient the studs perpendicular to the track, and fasten one low profile #8 screw through the flange of each track into the flange of the stud top and bottom.

  In commercial drywall framing (non-load bearing) the installer often only installs screws on one side of the wall. However, for load bearing walls, screws *must* be installed on *both* sides of the wall to prevent twisting of the stud and ensure alignment for in-line framing.

- continue inserting and fastening the studs into the track with the open side of the C-section facing the same direction for all studs;
  All studs in the wall should face in one direction. Parallel load bearing walls in the house should have all studs aligned in the same direction.
- align the punchouts in the studs to provide straight runs for the mechanical and electrical trades. Placing the stud with its colour coded end in the bottom track, will ensure alignment of the punchout holes;

FIGURE 11.4 ALIGNING PUNCHOUTS

- place the king studs at the rough openings with the web side of the stud facing the opening and punchouts aligned. Do not fasten the king stud at this time;
- if there are cripple studs at openings between king studs, do not install them at this time;
- continue down the length of the wall until all the studs are inserted and fastened in place.

11.3.6 Second Floor Load Bearing Walls

Second floor load bearing walls are installed in the same manner as the first floor. Attention must be paid to alignment of first and second floor openings. Second floor walls must only be erected after all of the second floor subfloor is in place and fastened. The subfloor should be completely fastened with the required number and spacing of fasteners since it provides bracing for the floor joists.

Second floor load bearing walls must be placed over supporting elements such as load bearing walls or double joists. The bottom track of the second floor walls must be fastened through the subfloor to the track or rim joist below with 1 - #8 screw 12 in. (300mm) o/c.

11.3.7 Interior Load Bearing Walls

Interior load bearing walls are constructed in a similar manner to exterior walls. They must bear directly onto a floor beam, other loadbearing wall or an engineered supporting element. Flat strap bracing is required on both sides but diagonal bracing is not (see Section 11.5 Wall Bracing). Doors, windows, and other openings are framed in the same manner as the first floor walls.

11.4 Lintel Assembly

11.4.1 Lintel Types

Lintels for wall openings were discussed in Chapter 4 Design Process. There are two common types of lintels that are built from C-sections. One is the **web-to-web open** assembly, and the second is the **flange-to-flange box** assembly. Refer to Figures 11.5 and 11.6 respectively for details of open and box type lintels.

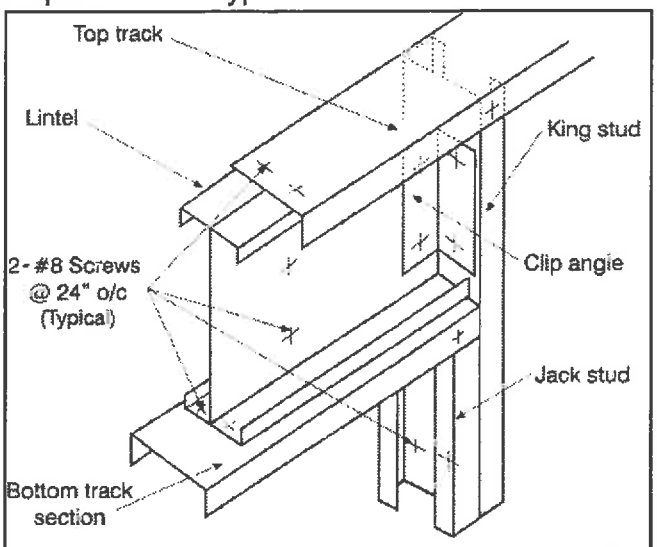

FIGURE 11.5 FRAMING OPEN LINTELS

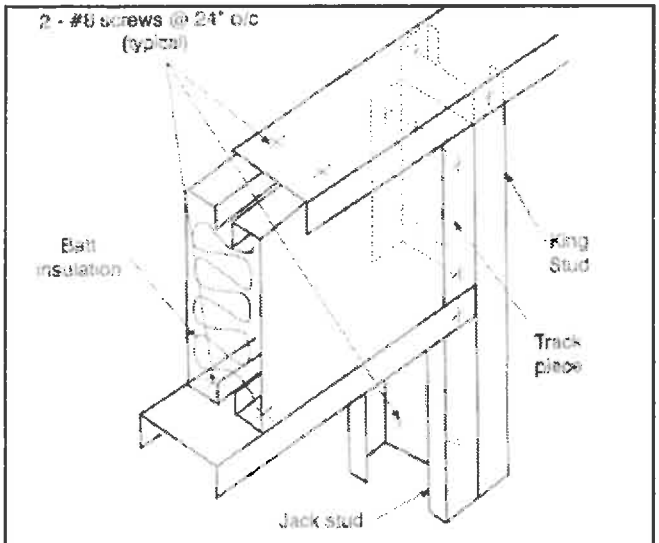

FIGURE 11.6 FRAMING BOX LINTELS

11.4.2 Open Lintels

The assembly of an **open lintel** is illustrated in Figure 11.5 and may be constructed and installed using the following steps;

- locate the necessary material (jack studs, clip angles and track) to frame the rough opening. Lintels are typically made from joist sections;
- cut the joist sections and the jack studs to the required length;
- fasten each jack stud (web-to-web) to the king stud with 2 - #8 screws 24 in. (600mm) o/c;
- cut a section of wall track (bottom of opening) equal to the spacing between king studs, place over each jack stud, and fasten the jack stud and track flanges with a #8 screw;
- fasten together the lintel joist sections web-to-web using 2 - #8 screws 24 in. (600mm) o/c;
- cut clip angles slightly less than the depth of the lintel joist and fasten to the open lintel assembly with #8 screws. The number of fasteners depends on the lintel span and can be found using Table 11.1.
- position the lintel assembly under the top track of the wall. Fasten the lintel to the top track with 2 - #8 screws at 24 in. (600mm) o/c.
- fasten the king stud to the top track. Fasten clip angles to the king stud with #8 screws depending on the lintel span (see Table 11.1);
- fasten the bottom lintel flanges to the bottom track section with 2 - #8 screws 24 in. (600mm) o/c.

Table 11.1: Lintel to King Stud Fastener Requirements

Lintel Span		Number of Screws in Track Stub or Clip Angle
Inches	millimetres	
0 - 95	0 - 2437	2 - #8
96 - 143	2438 - 3657	3 - #8
144 - 191	3658 - 4876	4 - #8

The fastener requirements in Table 11.1 would also apply to the box type lintel where a track piece is used to close off the ends of the lintel box and make the connection to the king stud (see Section 11.4.4 Insulating Inaccessible Spaces).

11.4.3 Cripple Studs

Lintels are normally positioned under the top track of the wall as shown in Figure 11.5. If the opening is such that cripple studs are required below the lintel, the cripple studs would be wind bearing only. These cripple studs should have the same size and spacing as the wall studs.

Where the lintel is immediately above an opening, but not attached to the top track as shown in Figure 11.7, load bearing cripple studs would be required. They would have to be placed in-line with the floor joists or roof members above. Load bearing cripple studs must be accurately cut to length to provide adequate bearing, and should be the same size and thickness as the wall studs.

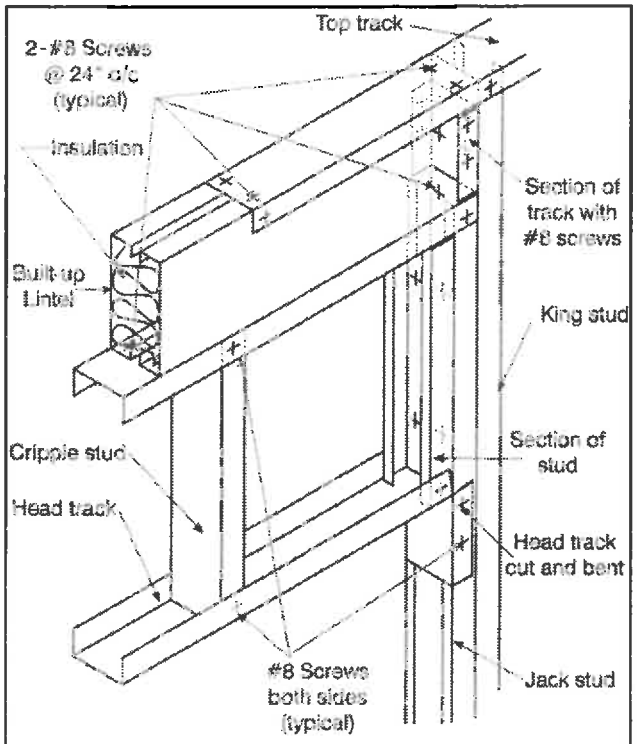

FIGURE 11.7 WINDOWS HEAD FRAMING: CRIPPLE STUDS BETWEEN LINTEL AND OPENING

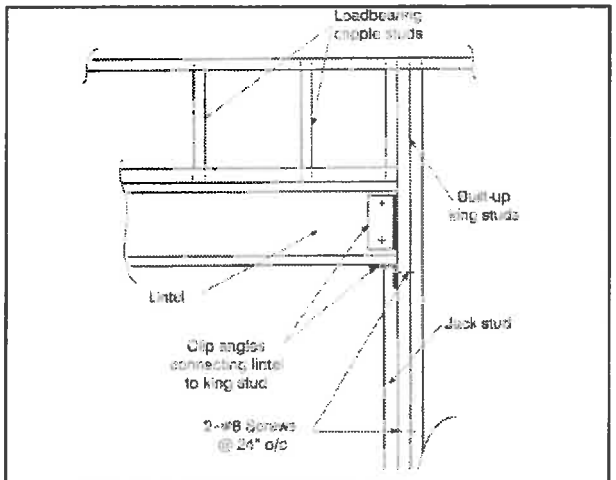

FIGURE 11.8 WINDOW LINTEL FRAMING: CRIPPLE STUDS BETWEEN TOP PLATE AND LINTEL

Where cripple studs are required below an opening (e.g. a window sill), they are usually wind bearing only. They should be the same size as the wall studs and positioned at the same spacing.

A window sill frame assembly is shown in Figure 11.9. The following steps are recommended for this assembly:

- cut the rim joists from track section. The length of this section is measured from the top of the opening to the bottom of the wall;
- fit insulation into the jamb stud opening, then attach the rim joist to the jack stud flanges using 2 - #8 screws 24 in. (600mm) o/c;
- cut the sill from wall track measuring 3 in. (75mm) longer than the opening. Cut and remove the track flanges 1-1/2 in. (38mm) back from each end;
- bend the track web down 90° and attach the sill track and fasten through the rim joist and jack stud with 2 - #8 screws;
- cut two cripple studs and fasten them to the rim joist and jack stud.

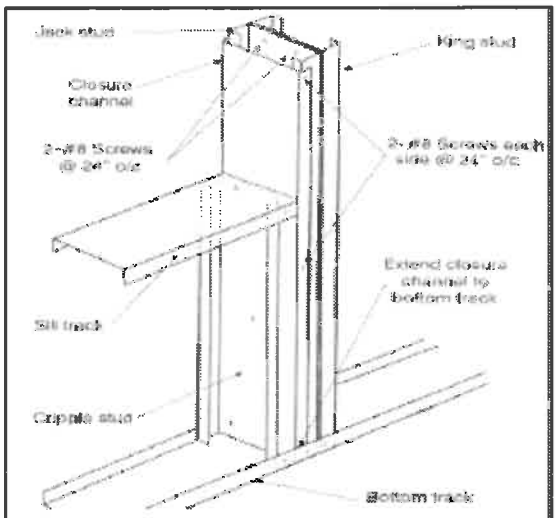

FIGURE 11.9 WINDOW SILL FRAMING

11.4.4 Insulating Inaccessible Stud Spaces

As much as possible, adjoining studs should be connected web-to-web to allow access for batt insulaton upon completion of the frame. However, less accessible areas may require that insulation be placed during wall assembly. Particular attention must be paid to double king studs, jacks, box lintels, corners and intersecting walls.

11.4.5 Splicing Track

Track sections may be spliced if necessary as shown in Figure 11.10. There must not be a track splice within 3 in. (75mm) of a stud. Splices should be secured with 4 - #8 screws on each side.

Load bearing studs must never be spliced.

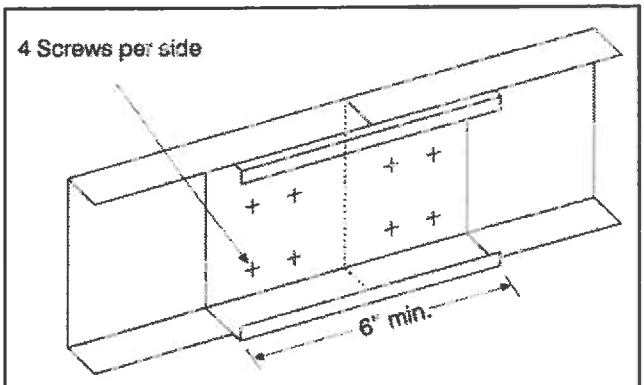

FIGURE 11.10 TRACK SPLICE

11.4.6 Stud Holes and Openings

As described in 11.3.5 Wall Assembly, the wall stud pre-punched openings should be lined up during the wall assembly. Openings in studs, whether pre-punched or field cut, must be at least 12 in. (300mm) from the top or bottom of the stud.

Round hole can be field cut into wall studs. The holes must be located about the centre of the web and not exceed 35% of the web depth. Larger web holes or any cutting of the flanges will reduce the load carrying capacity of the frame and professional design advice must be obtained before this is done. Chapter 19 Utilities – The Other Trades provides some guidance.

11.5 Wall Bracing

LSF walls must be braced to resist wind loading and seismic loading. A variety of bracing and bridging techniques are available and include horizontal and diagonal flat strap bracing, and notched channel bracing.

11.5.1 Horizontal Flat Strap Bracing

According to the CSSBI *Installation Manual*, **horizontal flat strap bracing** must be installed on **each side** of all load bearing walls to provide **rotational restraint** for the studs. The strapping must be attached to each stud flange with at least 1 - #8 screw. Horizontal flat strap bracing is usually 1.5 x 0.033 in. (75 x 0.91mm) sheet steel material.

Horizontal bracing is required at mid-height for walls 8 ft. 1in. (2.46 m) or less in height. Two rows of bracing, at third points on the wall face are required for walls over 8 ft. 1 in. (2.46 m) and up to 12 ft. (3.68 m) high.

Each end of the horizontal strap must be anchored to blocking installed between studs (see Figure 11.11). Blocking can be made from wall track and fastened to the stud flanges. At least 2 - #8 screws are used to fasten the strapping to the blocking.

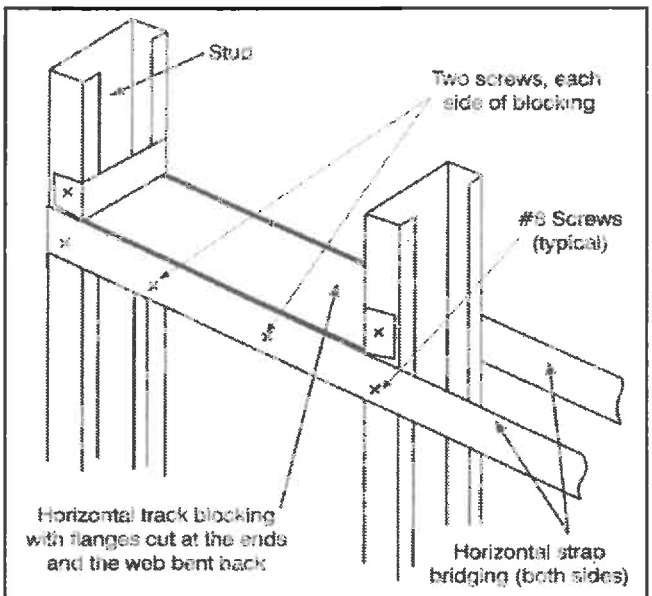

FIGURE 11.11 WALL BLOCKING AND HORIZONTAL FLAT STRAP BRACING END TREATMENT

11.5.2 Diagonal Flat Strap Bracing

Diagonal flat strap bracing is required on all exterior walls to resist wind and seismic (earthquake) loading. The number of diagonal braces needed per floor depends on the wind or earthquake loading as shown in Table 11.2. Diagonal flat strap bracing is usually 3 x 0.036 in. (75 x 0.91mm) sheet steel material.

Table 11.2: Diagonal Bracing Requirements

Specified Wind Load		Number of Braces per Wall		
		One Storey	Two Storey	
q(1/30)(kPa)	P (psf)	Ground Floor	Ground Floor	Second Floor
0.4	12	2	3	2
0.5	16	2	4	2
0.6	18	2	4	2

Earthquake			Number of Braces per Wall		
			One Storey	Two Storey	
Z_a	Z	v	Ground Floor	Ground Floor	Second Floor
1	0	0.05	2	2	2
2	1	0.05	2	2	2
3	2	0.10	3	4	3
4	4	0.10	7	9	7

Diagonal bracing must be located at each wall end (as a minimum) and the angle to the horizontal must not exceed 60 degrees. Diagonal straps must be anchored with 8 - #10 screws at each end to a double stud at the top of the wall and to the rim joist at the floor. Diagonal strapping is attached to every crossing stud with at least 2 - #10 screws as shown in Figure 11.12.

After fastening one end of the strap, draw the strapping tight before fastening it to intermediate studs and the other end. A flat strap stretcher made from a C-clamp as described in Chapter 10 Section 10.5.3 can be used to draw the strapping tight.

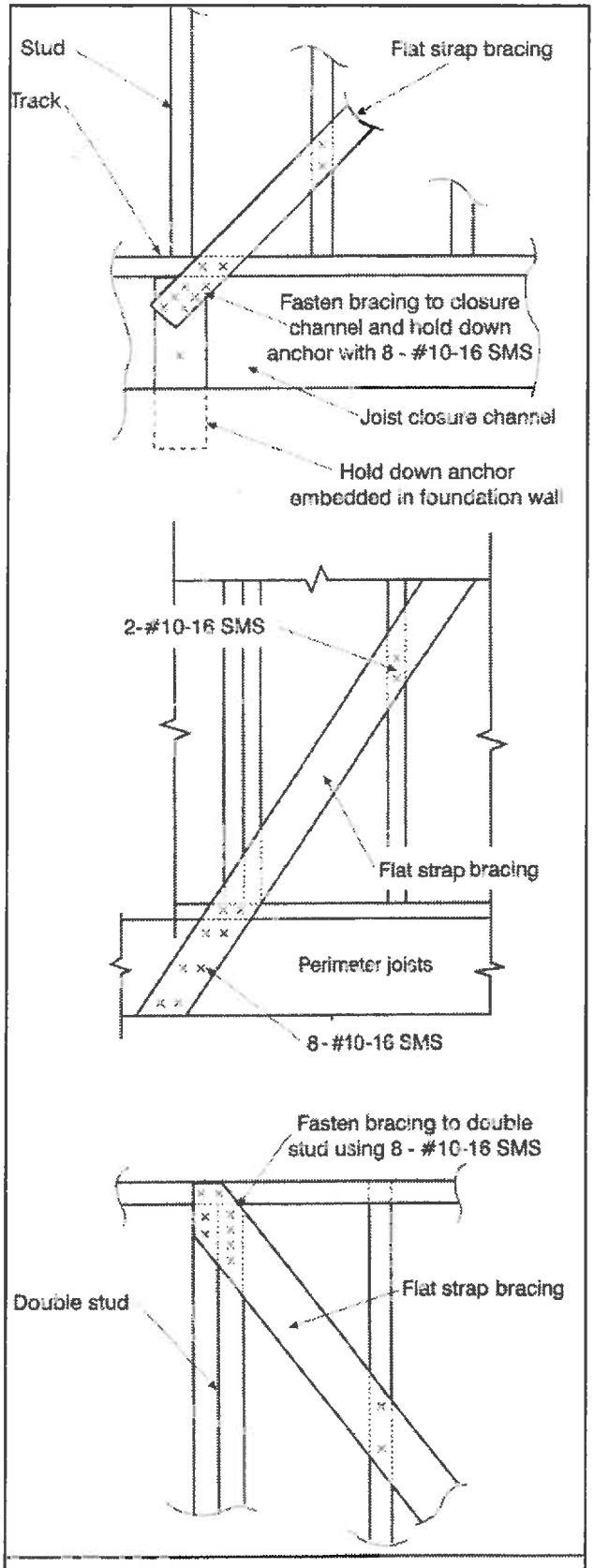

FIGURE 11.12 ANCHORING DIAGONAL FLAT STRAP BRACING

11.5.3 Structural Sheathing

Structural sheathing (OSB or plywood) is an acceptable alternative to horizontal and diagonal bracing. The following important points about sheathing must be considered:

- for maximum effectiveness sheathing should be installed with the longer axis (length) parallel to the stud framing;
- the sheathing may be attached to the wall while on the assembly surface or after the wall is tilted up, plumb and level;
- ensure sheathing is fastened tightly to the steel frame with #8 screws;
- sheathing can also be attached with pneumatic pins.

11.5.4 Temporary Bracing of Erected Walls

Temporary bracing of exterior load bearing walls must be provided to resist loads during construction and until the permanent bracing is completed. Compared to wood framing, unbraced steel walls tend to be more sensitive to wind and other lateral loads and temporary bracing is particularly important. Temporary bracing as would be used for a wood wall should be adopted as a minimum for a steel wall and additional braces are suggested.

Studs can provide temporary bracing and ground stakes may be used to anchor the bracing.

11.6 Balloon Framing

A **balloon frame** raises full height through a structure and is used to support floor framing and, possibly, the roof structure as shown in Figure 11.13.

If balloon framing is the structural design chosen for a home, an LSF engineer must determine the framing member sizes, connection and fastener requirements, and assembly details.

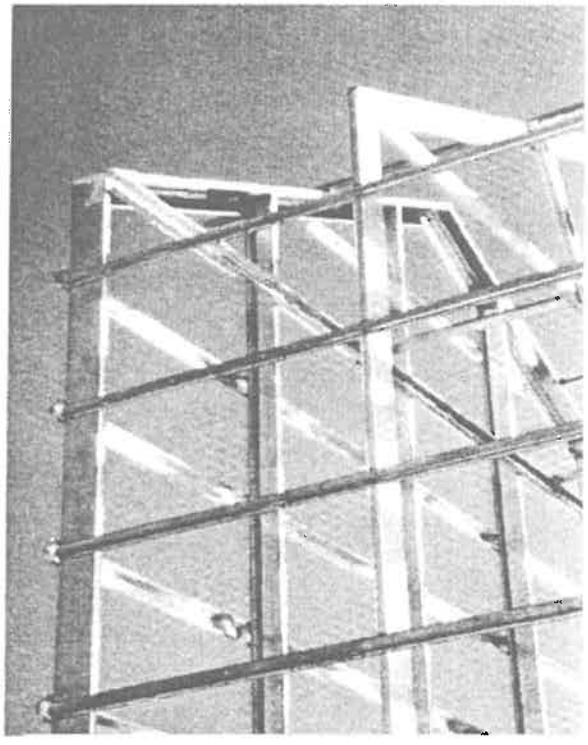

FIGURE 11.13 BALLOON FRAMING

12. ROOF RAFTER FRAMING

Chapter Objective

The purpose of this chapter is to introduce the student to the procedures for the layout and assembly of LSF ceiling joists and roof rafters. It briefly touches on the design aspects of roof structures, but it is not expected at this time, that a framer would have the responsibility of designing or selecting LSF member sizes for roof rafters.

Steel framed roofs are similar to conventional wood rafter or truss construction. There is no prescriptive method for steel framed roofs (rafter or truss type) in Canada at this time. The builder must retain an engineer to design the roof framing members and connection details if the roof is to be framed with rafters.

Specific Learning Objectives

After completing this chapter the student should be able to:

Objective 12.1: Describe the various components of a roof rafter framing system including the following:
- rafters
- ceiling joists
- ridge assembly
- collar ties and support braces
- ceiling joist and rafter bracing

Objective 12.2: Understand that roof rafter framing systems must be designed and certified by a professional engineer.

Objective 12.3: Describe the importance of in-line framing of roof rafters and load bearing wall systems, with respect to the overall structural integrity of the building. Where in-line framing is not possible, describe the requirements for the top plate of the supporting walls.

Objective 12.4: Given a set of blueprints, and working in a small team (three or four), demonstrate the ability to lay out and assemble LSF roof rafters in an appropriate manner, paying particular attention to the following details of layout and assembly:
- identify and select the correct size of track and stud/joist sections, fasteners, and other accessories that should be used according to the plans;
- measure and cut rafters as required using either the step-off method or true length calculation;
- fabricate a ridge assembly;
- accurately layout the rafter and ceiling joist locations according to plans for both a rake and lookout gable end assembly;
- correctly locate and install ceiling joists
- properly brace ceiling joists <u>and</u> demonstrate an understanding of the need for bracing top and bottom flanges if the ceiling joists are to be used as a temporary working platform for rafter installation;
- correctly locate and install roof rafters and ridge assembly;
- properly brace roof rafters using both roof sheathing on the top flanges and steel bracing (strap or track) on the bottom flanges;

Objective 12.5: Demonstrate the ability to select and use the appropriate fasteners and fastening systems for roof rafter framing systems;

Objective 12.6: Describe both a rake and lookout assembly, and demonstrate the ability to fabricate and install both rake and lookout assemblies as part of a roof rafter system;

Objective 12.7: Demonstrate an awareness of the job and personal safety aspects of framing a roof rafter system, and exhibit safe framing practices with respect to working at heights.

Suggested Activities

The recommended format for training is classroom discussion followed by hands-on construction of a small roof system. The instructor will need to determine in advance what kind of roof framing will be used for the example house: rafter framing, trusses, or both. This will have an impact on the material ordered in the cut list.

If a truss system is to be attempted in the hands-on component, Chapter 13 must be covered in advance of any construction. The alternative to actually constructing a roof rafter system or erecting trusses would be to visit a construction site while the roof is being framed.

For roof rafter framing the entire layout and assembly process must be explained first, prior to the students attempting to lay out and assemble the roof. To address the specific learning outcomes in the above objectives make sure that the following points are covered in the classroom discussion and roof assembly:

- Explain the advantages and disadvantages of rafter framing relative to truss systems.
- Using a set of blueprints, explain the rafter system being framed and discuss the consequences of framing the roof with and without in-line framing techniques.
- Show the students how to assemble a ridge member.
- Demonstrate how to measure and cut the rafters to match the roof slope. Have the students make enough clip angles and cut the rafters to the right slope. (Alternatively if a straight end rafter cut is to be used, demonstrate how to measure and cut rafters and track section for the roof).
- Set up the scaffold and ladders in the house area. Emphasize the safety requirements of installing and working on roofs.
- Show how to layout, install, fasten, and brace ceiling joists.
- Show how the rafters and ridge assembly are installed. Have the students set the rafters.
- Explain the importance of rafter bracing. Have the students install the rafter bracing as the rafters are installed.
- At one gable end of the house fabricate and install a rake assembly. At the other gable end fabricate and install a lookout assembly.

Materials and Equipment

The roof rafter framing members, fasteners, and accessories were ordered in previous chapters. The table below summarizes the additional equipment required for this chapter.

Item	Quantity
Scaffolding with safety rails and wheels	2
6'–0" portable ladders	2
8'–0" portable ladders	3
Fall protection gear (harnesses and safety lines)	6

12 ROOF RAFTER FRAMING

12.1 Introduction

Steel framed roofs are similar to conventional wood rafter or truss construction. There is no prescriptive method for steel framed roofs (rafter or truss type) in Canada at this time. It is anticipated that a prescriptive method for steel framed roofs will be incorporated into the CSSBI *Steel Framing for Part 9 Construction* in the near future.

In the interim the builder must retain an engineer to design the roof framing members and connection details if the roof is to be framed with rafters. A second option is to use a proprietary manufactured truss system, also developed with professional design guidance and stamped by an engineer. The local building authority will normally accept this approach.

The purpose of this chapter is to introduce the student to the procedures for the layout and assembly of LSF ceiling joists and roof rafters. It briefly touches on the design aspects of roof structures, but it is not expected at this time, that a framer would have the responsibility of designing or selecting LSF member sizes for roof rafters.

This chapter is divided into the following sections:

Section 12.2 Principles of Rafter Framing
Section 12.3 Preparation for Roof Rafter Framing
Section 12.4 Ceiling Joist Installation
Section 12.5 Roof Ridge and Rafter Installation
Section 12.6 Fastening Systems
Section 12.7 Rake and Lookout Rafter Assemblies
Section 12.8 Alternate Method of Rafter Framing

The student is referred to the following sections of this document which have some bearing on the layout and assembly of ceiling joists and roof rafters:

Chapter 2 Job Health and Safety
Chapter 4 Design Process
Chapter 8 Fasteners
Chapter 10 Floor Joists
Chapter 11 Load Bearing Walls
Chapter 16 Non-Load Bearing Walls
Chapter 17 Thermal, Vapour, and Air Barriers

12.2 Principles of Rafter Framing

After the exterior (and interior) load bearing walls are erected and braced, layout and assembly of the roof structure can proceed. The roof frame is usually sloped and built with rafters or trusses. CSSBI *Steel Framing for Part 9 Construction* does not include a design and selection procedure for roof rafters or trusses. A design professional must be retained to develop member sizes, design and connection details.

12.2.1 Roof Rafter Framing

Roof rafter framing uses the 'stick built' approach and the student will find many similarities between steel rafter framing and wood rafter framing. Scaffolding is recommended for layout and assembly to help ensure a safe working environment.This chapter describes roof rafter framing using LSF members.

Roof truss framing is more of a 'panelized' or pre-fabricated approach. Pre-engineered steel roof truss systems are commercially available. This type of roof framing system will be discussed in Chapter 13 Roof Trusses.

Figure 12.1 shows a partial cross section of a house illustrating components that are normally present in a roof rafter framing system. This design is from an American prescriptive method, and while certain details may be different, the principles of design and construction are similar to a system engineered in Canada.

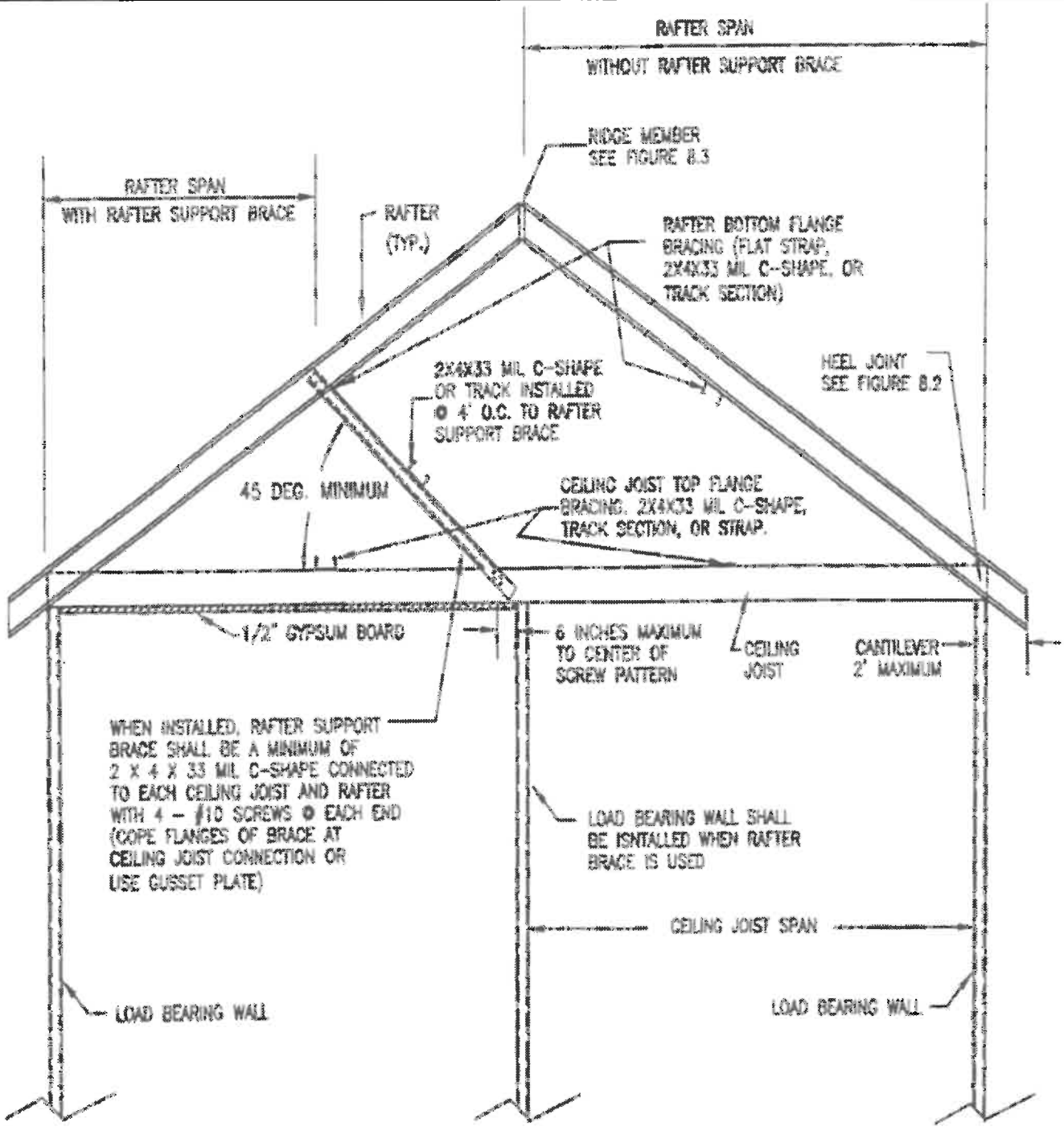

FIGURE 12.1 LSF ROOF RAFTER CONSTRUCTION (AMERICAN PRESCRIPTIVE METHOD)

12.2.2 Load Transfer

LSF rafters transfer loads in much the same way as wood rafters. They bear on the top track of the load bearing exterior walls and frame into a ridge assembly at the peak of the roof. The mass of the roof structure (dead load) and the climatic live load (snow, rain and wind) are carried by the rafters, transferred to the top track of the walls, and down the load bearing wall studs to the foundation.

An additional **support brace** may be added to the rafter frame to transfer load to an interior load bearing wall. Support braces act to reduce the span and may reduce the necessary size of the rafter members. Another technique is the use of a **collar tie** which spans horizontally between rafters, and is placed between the ridge assembly and top plate of the load bearing walls. The size and connections for such braces and collars, and the contribution they make to reducing rafter size and spacing requirements for a steel rafter system, must be established by a design engineer.

12.2.3 Ceiling Joists

Ceiling joists form a critical part of the roof structure. Ceiling joists span from one load bearing wall to another and tie to the rafters at the top plate. The ceiling joists prevent the horizontal spreading of the exterior walls caused by the loading and angle of the roof rafters that bear on them. Ceiling joists also provide a surface to attach interior sheathing or drywall, and act to contain insulating material placed or blown into the attic space.

Ceiling joist spans and sizes for attics not accessible by stairways are found in *Section 2* of the CSSBI *Member Selection Tables. Tables 2C-1*, *2C-2*, and *2C-3* list maximum allowable clear span for selected joist sizes and bracing.

12.2.4 Rakes and Lookouts

A conventional gable roof framed with rafters can use "rake" or "lookout" assemblies to frame the portion that projects over the gable end wall. A rake is normally used when the projection is 12 in (300 mm) or less, and a lookout is used when the projection is greater than 12 in (300 mm).

The gable wall itself can be framed with wind bearing studs for a rake assembly. Full load bearing studs are required when a lookout assembly is employed. This is discussed later in section 12.7.

12.3 Preparation for Roof Rafter Framing

The procedure for roof rafter framing described in the next five sections follows the traditional approach of wood rafter framing. Rafter members are individually cut to length. The end cuts are made such that they are vertical when the rafter is in place. An alternative method to the angle cuts is described in Section 12.8.

The LSF rafter members can be ordered cut-to-length or ordered in standard lengths and field-cut by the framers. LSF roof rafters are made from C-sections and therefore have stiffened flanges. The size, thickness and spacing of the roof rafters **cannot be selected** by the framer using the CSSBI *Member Selection Tables*. They must be selected by a design professional.

All exterior and interior load bearing walls must be adequately braced and plumb prior to the installation of the ceiling joists and roof rafters.

12.3.1 In-Line Framing

The roof rafter structure should follow the principles of **in-line framing**, where the rafter members are in-line with the studs of the exterior load bearing walls and within the tolerances described in Chapter 4. The top track of the load bearing exterior wall should be covered with a 2 x 4 wood top plate, and attached with #10 screws at 16 in (400 mm) o/c. The wood top plate must be fastened from below, screwing through the steel track and into the wood. If in-line framing is used, this top plate is not necessary. It does however provide a "thermal bridge" break for the purpose of isolating the walls from the roof frame to reduce heat transfer.

If the rafters and wall framing members are at different spacing, or are not in-line with the load bearing wall studs, a double wood top plate (nominal 2 x 4) will be required as shown in Figure 12.2.

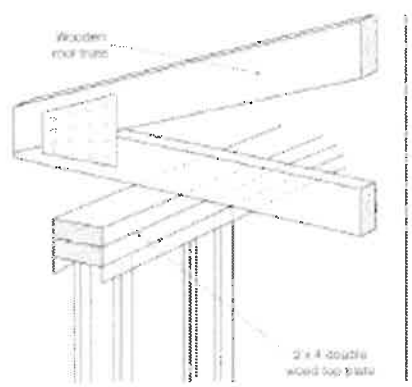

FIGURE 12.2 DOUBLE TOP PLATES SUPPORTING ROOF FRAMING

12.3.2 Preparing the Ridge Member

Roof rafters can be framed into a ridge member in a manner similar to wood rafter framing. The ridge member is an assembly of a C-section and track as shown in Figure 12.3. Verify the length of the ridge assembly from the blueprints, and cut the LSF members to length if not ordered cut-to-length. Steel members in the ridge assembly should not be spliced unless the details of the splices have been checked by an engineer.

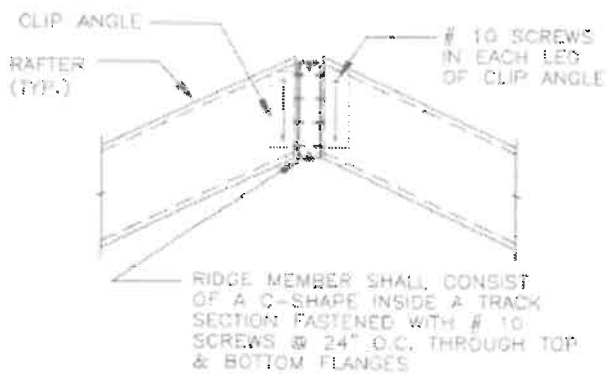

FIGURE 12.3 RIDGE MEMBER ASSEMBLY AND CONNECTION

Assemble the C-section and track section by fastening both the top and bottom flanges using #10 screws at 24 in (600 mm) o/c. Cut clip angles in preparation for attaching the roof rafters to the ridge assembly. The size of the clip angles will depend on the number of fasteners required. The connection details must be determined by an engineer. Further details about this fastening system is provided in Section12.6 Fastening Systems.

12.3.3 Preparing the Rafter Members

When a ridge assembly is to be used, measure and cut the LSF rafters to length as you would wood rafters. It is assumed the cut angle at each end of the rafter is identical to allow the rafter to fit flush with the ridge assembly and provide a vertical surface for fascia attachment.

The LSF rafters will sit on the top plate at the outside edge of the supporting wall. Unlike wood rafter framing, steel rafters do not have a 'bird's-mouth' cut to allow the rafter to seat itself onto the top plate of the underlying wall. The stiffened flange and web of the C-section provides the resistance-to-bending strength for the member. A bird's-mouth cut would drastically reduce the ability of the rafter to resist bending and carry load.

The two common procedures for measuring rafters are:

- the step-off method, which utilizes the roof slope, the horizontal distance covered by the rafter, and a framer's square;

- the 'true length' calculation, which utilizes the total rise and total run of the rafter, along with Pythagorean's Theorem to calculate the rafter length (hypotenuse of a right angle triangle).

In either case the framer will have to obtain the horizontal distance travelled by the rafter from the outside surface of the ridge assembly to the end of the overhang.

After the rafters have been measured and cut, the location where the rafter will rest on the outside edge of the wall should be marked for later assembly.

12.3.4 Preparing the Ceiling Joists

The CSSBI *Member Selection Tables 2C-1, 2C-2,* and *2C-3* show maximum allowable span for single span ceiling joists of various sizes and thickness. These ceiling joists will typically bear on exterior support walls and are for attics without stairway accessibility. Ceiling joists selected by the prescriptive method, are not expected to carry the loads one might expect on a floor system. They are only required to carry their own weight along with the loading created by drywall/sheathing and the overlying insulation.

Ceiling joists can also be supported by interior load bearing walls. A detail of an interior wall support is shown in Figure 12.4.

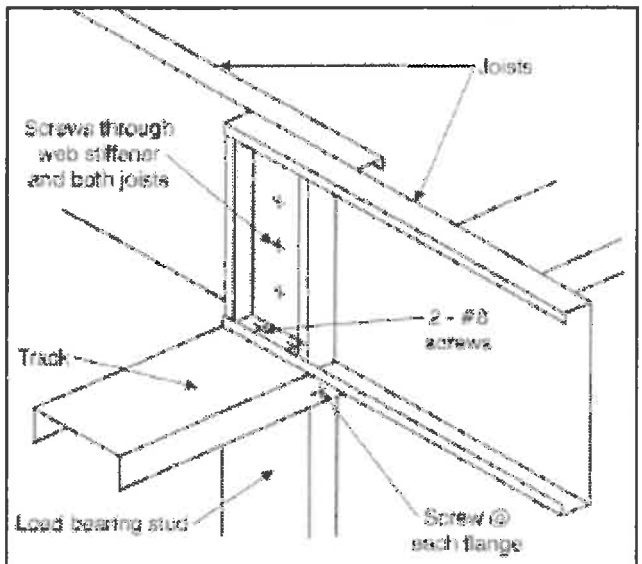

FIGURE 12.4 LAPPED JOISTS SUPPORTED ON A LOAD BEARING WALL

12.3.5 Rafter and Ceiling Joist Layout

The following layout procedure is offered as one possible way to ensure that the roof rafters and ceiling joists are located in the proper positions. If an alternate method is preferred by the framers, make sure that both layout person(s) and assembler(s) follow the same method.

- Assemble the ridge members and center the assembly on the top of one of the walls where the rafters will bear;
- Mark the rafter locations on both sides of the ridge assembly and on the top plate of the wall;
- For a **rake** design, the first rafter mark will be at the very end of the top plate over the web of the corner wall stud;
- For a **lookout** design, the first rafter mark will be over the web of the first stud in from the corner of the wall. The distance between the end of the ridge and the first rafter is the out-to-out depth of the lookout assembly which will eventually frame into this rafter;
- Place an "X" one the side of the stroke on the ridge assembly to indicate the bearing position of the rafter flange;
- Place an "X" mark on the top plate to indicate the bearing position of the ceiling joist flange;
- Continue marking all rafter and ceiling joist positions. The rafters will all face the same direction. The web of the ceiling joists will back onto the web of the rafters. The ceiling joists will therefore all face in a direction opposite to the rafters;
- Move the marked ridge assembly over to the other load bearing wall and mark the ceiling/rafter positions on the top plate;
- Use the marked ridge assembly to mark ceiling joist and rafter positions over any spanning lintels and interior load bearing walls.

12.4 Ceiling Joist Installation

When the spacing of the wall studs and the ceiling joists are the same, the principles of in-line framing can be adhered to. Although structurally unnecessary, a single wooden top plate is recommended as a thermal bridge break. The ceiling joists are located in-line with the load bearing studs immediately under the top plate. When in-line framing is not possible due to different stud and joist spacing, a double wooden top plate must be used.

Temporarily remove the roof ridge assembly. The ceiling joists are lifted up from below and set on the top plate, and lined up on the stroke mark with the webs of the joists lined up back-to-back with the rafter webs. Each ceiling joist should bear over the entire width of the top plate.

Fasten all the ceiling joists to the top plate using two #10 x 2 1/2 in (64 mm) screws. The screws should pass through the bottom flange of the ceiling joist into the wooden top plate and track of the underlying wall. Web stiffeners are required for ceiling joists where they bear on the top plate of a wall (see Section 12.6.1).

12.4.1 Bracing Ceiling Joists

Similar to other elements of the building frame, ceiling joists must be braced to prevent lateral racking of the frame and distorsions (twisting) in the member flanges. **Do not walk on the ceiling joists until they have been braced on the top and bottom flange.**

Ceiling joists require permanent bracing on the top flanges so that the unsupported length of any flange does not exceed the distance indicated in the CSSBI *Member Selection Table* from which the joist size was selected. For example, a joist selected using *Table 2C-1* will require bracing every 1200 mm. Joists selected from *Table 2C-2* and *2C-3* will need bracing every 1800 mm and 2400 mm respectively.

Flat strap or track section turned on its back, can serve as top flange bracing. The bracing must be anchored using blocking of the same type and interval described for floor joists in Chapter 10 Section 10.5.2. Permanent ceiling drywall provides sufficient bracing for the bottom flange.

12.4.2 Temporary Working Platform

The framer may choose to use the ceiling joists as a temporary platform for installation of the rafters. If this is the case, the top flanges must be fully braced, and temporary strap bracing installed on the bottom flanges. Any working platform (i.e. OSB, plywood) lying on top of the ceiling joists must be temporarily tacked down to the joists to provide a safe and stable surface to walk on.

12.5 Roof Ridge and Rafter Installation

If the roof rafters are to be installed using a temporary platform on the ceiling joists, this must first be prepared. If scaffolding is to be used it should be assembled and moved into place. Temporary bracing material (wood or steel) should be easily accessible during the roof framing process.

12.5.1 Assembling the Frame

The following is a suggested step-by-step procedure for assembling the roof frame. It does not preclude any other procedure which the framers might find faster and easier. Attention to job and personal safety should be utmost in the minds of the framing crew when assembling the roof structure because of the heights involved.

- Hoist the ridge assembly back onto the ceiling joists and position it in the middle of the roof according to the marks made during the layout process;
- Lift six rafter members onto the ceiling joists, positioning two at each gable end of the house and two in the middle;
- Fasten the pre-cut clip angles to the ridge ends of each rafter;
- At one gable end, lift the two rafters into their approximate position (the rafter has been pre-marked where it rests on the outside edge of the supporting wall) with the rafter web back-to-back with the ceiling joist web;
- While the rafters are held in place, a third member of the crew will adjust and screw each rafter into the ceiling joist with one #10 screw and temporarily clamp the joist and rafter together;
- Temporarily brace the two rafters with wood or steel bracing, allowing a space for the ridge assembly between the two upper ends of the rafters;
- Move to the other gable end and repeat these steps to erect and temporarily brace the two end rafters;
- Lift the ridge assembly into place so that it can be attached to the rafters at each gable end of the roof. Fasten the clip angles of each rafter to the ridge with one #10 screw. The ridge assembly should now be attached to four rafters (two at each end);
- Depending on the length of the ridge assembly there may be some sag in it. Install the two rafters in the middle of the ridge, ensuring that the ridge is level;
- Complete the fastening requirements at the rafter-ridge connection and the rafter-ceiling joist connection for the six erected rafters. These details should be specified by the design engineer
- Proceed with the installation of the remaining rafters.

12.5.2 Bracing Roof Rafters

Similar to other areas of the building frame, roof rafters must be braced to prevent lateral racking of the frame and distorsions (twisting) in the member flanges.

Roof rafters require permanent strap bracing on the bottom flanges so that the unsupported length of any flange does not exceed 7' - 10" (2400 mm). A stud track section, turned on its back, will also serve as flange bracing. The bracing must be anchored by blocking of the same type and at the same interval described for floors in Chapter 10.

The permanent roof sheathing will provide sufficient bracing for the top flange. Framers should not attempt to work from roof rafters until the bottom bracing is in place and a sufficient portion of roof sheathing has been installed and sufficiently attached to the rafters.

12.6 Fastening Systems

The fastening specifications for the roof rafter-ceiling joist connection and the roof rafter-ridge assembly are described in the following sections. Because roof rafter and truss systems are not yet prescriptive in nature, an engineer should be consulted for verification of these fastening systems.

12.6.1 Roof Rafter – Ceiling Joist Connection

The CSSBI *Member Selection Tables* require a web stiiffener for the ceiling joist at the top plate. This stiffener may be installed along with the rafter member as shown in Figure 12.5.

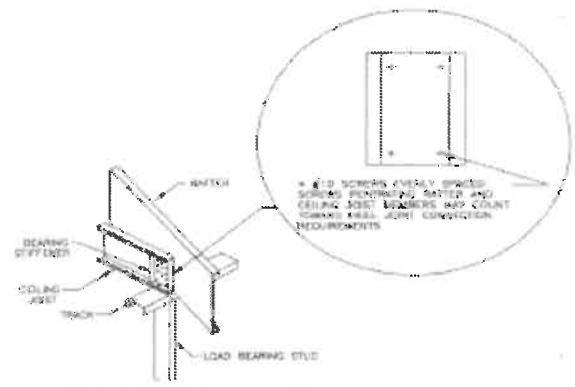

FIGURE 12.5 SUGGESTED RAFTER HEEL CONNECTION DETAIL

The number of fasteners for the roof rafter-ceiling joist connection will be as specified by a design professional. The American prescriptive method[1] does provide requirements for the number of #10 screws and is reproduced in Table 12.1 **for reference purposes only**. If this prescriptive method is used, an engineer must be consulted for verification.

[1] Prescriptive Method for Residential Cold-Formed Steel Framing, Second Edition, August 1997, AISI, US Department of Housing and Urban Development and National Association of Home Builders.

Table 12.1: Number of Screws for Ceiling Joist to Rafter Connection

Roof Slope	Building Width, ft. (m)															
	24' (7.05 m)				28' (8.23 m)				32' (9.75 m)				36' (10.97 m)			
	Ground Snow Load, psf				Ground Snow Load, psf				Ground Snow Load, psf				Ground Snow Load, psf			
	20	**30**	**50**	**70**	**20**	**30**	**50**	**70**	**20**	**30**	**50**	**70**	**20**	**30**	**50**	**70**
	Number of #10 Screws															
3/12	5	6	9	12	6	7	10	13	7	8	12	15	8	9	13	17
4/12	4	5	7	9	5	6	8	10	6	6	9	12	6	7	10	13
5/12	4	4	6	7	4	5	7	9	5	5	8	10	5	6	9	11
6/12	3	4	5	7	4	4	6	8	4	5	7	9	4	5	7	10
7/12	3	3	5	6	3	4	5	7	4	4	6	8	4	5	7	9
8/12	3	3	4	5	3	3	5	6	3	4	5	7	4	4	6	8
9/12	2	3	4	5	3	3	4	6	3	4	5	6	3	4	6	7
10/12	2	3	4	5	3	3	4	5	3	3	5	6	3	4	5	7
11/12	2	3	4	4	3	3	4	5	3	3	5	6	3	4	5	6
12/12	2	3	3	4	2	3	4	5	3	3	4	6	3	4	5	6

Notes: 20 psf = 0.96 kPa; 30 psf = 1.44 kPa; 50 psf= 2.39 kPa; 70 psf = 3.35 kPa
Screws are #10 minimum

12.6.2 Clip Angle Connection to Ridge Assembly

The number of fasteners for the clip angle connection to the ridge assembly must also be specified by a design professional. The American prescriptive method[1] provides requirements for the number of #10 screw fasteners and is reproduced in Table 12.2 **for reference purposes only**. If this prescriptive method is used, an engineer must be consulted for verification.

Table 12.2: Number of Screws Required for Each Leg of Clip Angle for Rafter to Ridge Connection

Building Width ft. (m)	Ground Snow Load, psf			
	0 to 20	21 to 30	31 to 50	51 to 70
	Number of #10 Screws			
24' (7.05 m)	2	3	4	4
28' (8.23 m)	2	3	4	5
32' (9.75 m)	3	3	4	5
36' (10.97 m)	3	4	5	6

12.7 Rake and Lookout Rafter Assemblies

As described in Section 12.2.4 the gable ends of the roof will require either a rake or lookout assembly for the overhang.

12.7.1 Rake Assembly

The rake is a framing option for the overhanging ends of a gable roof. The rake overhang should not be more than 12 in (300 mm) when attached to the end gable rafter.

A rake assembly is constructed from two inward facing track sections, equal in length, size and thickness to the roof rafters. The ends of the track sections are cut at the same angle as the roof rafters. The tracks are joined together along their length by short, equal length pieces of rafter, in a similar manner as blocking between floor joists. The blocking pieces are spaced at regular intervals, usually 24 in (600 mm) o/c. The assembly resembles a ladder when complete. The assembly can be fabricated on the ground, hoisted and clamped to the end gable rafter and connected with two #10 screws at 24 in (600 mm) o/c.

If the blocking pieces were installed in the normal manner, they will be at an angle (perpendicular to roof slope) when the rake assembly is connected to the end gable rafter. A piece of steel ridge cap should be made to cover the open 'V' peak created by the ends of each rake at the ridge.

Roof sheathing should be staggered so that it spans back from the gable at least one complete rafter spacing.

The end-gable wall is required to withstand wind loading only (since the end rafter supports snow loading) and the wall studs accordingly may be selected from CSSBI *Member Selection Tables 4-1* and *4-2*.

12.7.2 Lookout Assembly and Installation

The lookout is another framing option for the overhang of a gable roof. The lookout is wider than a rake (up to 24 in (600 mm)) and spans over the gable end wall to connect to the first rafter back from the wall as shown in Figure 12.6. The lookout, in this figure, has the blocking pieces connected to the rafter with clip angles, although it could have been constructed with blocking and two track sections similar to the rake assembly described above.

FIGURE 12.6 LOOKOUT FOR GABLE ROOF

The gable end wall supports both wind and snow loading from the contributory portion of the roof and must be design accordingly.

12.8 Alternate Method of Rafter Framing

The traditional method of roof rafter framing previously described tends to be labor intensive because of the angle cuts required.

An alternate method employs two back-to-back track sections in place of the nested ridge assembly described in Section 12.3.2. The tracks can be angled by fastening them together at the bottom edge of the web, and then splitting them apart at the top edge of the web with angled shims as shown in Figure 12.7.

FIGURE 12.7 MODIFIED RIDGE ASSEMBLY

The rafter members are then cut square at the ridge end and the fascia end. The square cut fits into the ridge track section and is connected with angle clips. The ridge assembly is finished using a top pre-formed cap. A special piece of steel is formed to fit onto the lower end of the rafter for the attachment of fascia.

An alternate method of erection is to temporarily brace the end and middle rafters in position, and then slide the track sections onto the ends. The remaining rafters are installed into the track and the pre-formed cap is installed.

Figure 12.8 shows a completed assembly using this method.

FIGURE 12.8 ROOF RAFTER FRAMED INTO TRACKS WITH FINISHING TOP CAP

13. ROOF TRUSSES

Chapter Objective

The purpose of this chapter is to introduce the student to the procedures for the layout and assembly of LSF roof trusses. It briefly touches on the design aspects of roof structures, but it is not expected at this time, that a framer would have the responsibility of designing LSF roof trusses.

Steel framed roofs are similar to conventional wood rafter or truss construction. There is no prescriptive method for steel framed roofs (rafter or truss type) in Canada at this time. The builder must retain an engineer to design the roof framing members and connection details if the roof is to be framed with trusses.

Specific Learning Objectives

After completing this chapter the student should be able to:

Objective 13.1: Describe the various components of a roof truss including the following:
- top chord
- bottom chord
- web members

Objective 13.2: Understand that roof truss framing systems are normally pre-engineering, pre-fabricated, and must be designed and certified by a professional engineer.

Objective 13.3: Demonstrate an understanding of the following types of trusses:
- fink truss
- "W" truss
- girder truss
- valley truss
- king truss
- half truss
- scissor truss

Objective 13.4: Describe the importance of in-line framing of roof trusses and load bearing wall systems, with respect to the overall structural integrity of the building. Where in-line framing is not possible, describe the requirements for the top plate of the supporting walls.

Objective 13.5: Given a set of blueprints, and working in a small team (three or four), demonstrate the ability to lay out and install LSF roof trusses in an appropriate manner, paying particular attention to the following details of layout and assembly:
- identify and select the correct trusses, fasteners, and other accessories that should be used according to the plans;
- accurately layout the truss locations according to plans for a rake gable end assembly;
- correctly locate and install roof trusses;
- properly brace roof trusses using both roof sheathing on the top flanges and steel bracing (strap or track) on the top and bottom chords;

Objective 13.6: Demonstrate the ability to select and use the appropriate fasteners and fastening systems for roof truss framing systems;

Objective 13.7: Describe a rake and ridge cap assembly, and demonstrate the ability to fabricate and install both rake assemblies and ridge caps as part of a roof truss framing system;

Objective 13.8: Demonstrate an awareness of the job and personal safety aspects of framing a roof truss system, and exhibit safe framing practices with respect to working at heights.

Suggested Activities

The recommended format for training is classroom discussion followed by hands-on construction of a small roof system. The instructor will need to determine in advance what kind of roof framing will be used for the example house: rafter framing, trusses, or both. This will have an impact on the material ordered in the cut list.

The alternative to actually constructing a roof truss system would be to visit a construction site while the roof is being framed, or to present a slide show of roof truss systems in the process of being framed.

For roof truss framing the entire layout and assembly process must be explained first, prior to the students attempting to lay out and assemble the roof. To address the specific learning outcomes in the above objectives make sure that the following points are covered in the classroom discussion and roof assembly:

- Explain the advantages and disadvantages of truss systems relative to rafter framing.
- Using a set of blueprints, explain the truss system being framed and discuss the consequences of framing the roof with and without in-line framing techniques.
- Set up the scaffold and ladders in the house area. Emphasize the safety requirements of installing and working on roofs.
- Show how to layout, install, fasten, and brace roof trusses.
- Explain the importance of truss bracing. Have the students install the truss bracing as the trusses are installed.
- At one gable end of the house fabricate and install a rake assembly. Install a ridge cap on the top of the trusses.

Materials and Equipment

The roof framing members, fasteners, and accessories were ordered in a previous chapter. The table below summarizes the additional equipment required for this chapter if a roof truss system is to be attempted.

Item	Quantity
4 x 8 sheets of 1/2–inch plywood for roof sheathing	6
Chalk line (student provides own)	-
Carpenter pencil (student provides own)	-
Set of truss drawings (one per framing team)	5
Sample of pre-manufactured truss (optional)	1

13. ROOF TRUSSES

13.1 Introduction

Steel framed roofs are similar to conventional wood rafter or truss construction. There is no prescriptive method for steel framed roofs (rafter or truss type) in Canada at this time. It is anticipated that a prescriptive method for steel framed roofs will be incorporated into the CSSBI *Steel Framing for Part 9 Construction* in the near future.

In the interim the builder must retain an engineer to design the roof framing members and connection details if the roof is to be framed with trusses. A second option is to use a proprietary manufactured truss system, also developed with professional design guidance and stamped by an engineer. The local building authority will normally accept this approach.

The purpose of this chapter is to introduce the student to the procedures for the layout and installation of LSF roof trusses. It briefly touches on the design aspects of roof structures, but it is not expected at this time, that a framer would have the responsibility of designing LSF roof trusses.

This chapter is divided into the following sections:

Section 13.2 Principles of Roof Trusses
Section 13.3 Roof Truss Types
Section 13.4 Preparation for Roof Truss Framing
Section 13.5 Roof Truss Installation

The student is referred to the following sections of this document which have some bearing on the layout and installation of roof trusses:

Chapter 2 Job Health and Safety
Chapter 4 Design Process
Chapter 8 Fasteners
Chapter 11 Load Bearing Walls
Chapter 16 Non-Load Bearing Walls
Chapter 17 Thermal, Vapour, and Air Barriers

13.2 Principles of Roof Trusses

After the exterior (and interior) load bearing walls are erected and braced, layout and assembly of the roof structure can proceed. The roof frame is usually sloped and built with rafters or trusses. CSSBI *Steel Framing for Part 9 Construction* does not include a design and selection procedure for roof rafters or trusses. A design professional must be retained to develop member sizes, design and connection details.

Roof trusses are triangular-shaped assemblies that span between load bearing walls without any intermedate support. They are comprised of **'chords'** which form the main top and bottom members of the truss, and **'webs'** which are members linking the chords together. The top chord(s) is inclined at an angle to match the slope of the roof. The bottom chord may or may not be horizontal, depending on the architect's specifications for ceiling type.

The chords and web act together as a set of compression and tension members, to carry the live and dead loads of the roof structure, and transfer those loads through to the supporting load bearing walls.

13.2.1 Residential Application

Roof trusses for residential use tend to be pre-engineered and pre-fabricated assemblies. They are usually designed by a design professional for specific applications, assembled off-site in a 'panelized' manner, and delivered to the site ready to be lifted and fastened to the exterior walls of the structure. Quite often a 'just-in-time' delivery method is used, where the joists are lifted off the delivery vehicle and set in place in one step.

Roof trusses often span the width of the house between exterior walls and thus do away with the need for interior load bearing walls. They are most often spaced at 24 in (600 mm) o/c. Where the truss design results in a horizontal bottom chord, this chord substitutes for the ceiling joist.

The truss manufacturer/supplier will often include drawings and a schedule to indicate the type of truss and its location within the roof structure. It is the framer's job to ensure the installation is according to the schedule, drawing instructions, and building code requirements.

At present, the roof truss industry in Canada is largely composed of truss manufacturers who use dimensional wood members (mainly 2 x 4's) to design and fabricate roof trusses. The chords and webs are connected to one another with galvanized steel 'gang-nails'.

Light gauge steel trusses are being manufactured on an individual basis to meet the specific needs of the home design.

13.3 Roof Truss Types

13.3.1 Fink Truss

The truss configuration used to frame the roof structure over the main body of the design house (see Chapter 4 Design Process) is called a **Fink Truss** or **"W" Truss**. In addition to this type of truss design, other truss configurations are required to complete the roof structure. The student is reminded that all truss types must be designed by an engineer.

13.3.2 Girder Truss

A girder truss is designed for increased load bearing capacity. For example, it may be used to support other trusses that frame into it. A girder truss is seen in Figure 13.1. In this figure the girder truss is located at the end of a gable where the hip roof ties into it.

FIGURE 13.1 GIRDER TRUSS SUPPORTED HALF TRUSS AT GABLE-HIP INTERSECTION

An LSF girder truss can be made from members that are the same dimension as other trusses, but utilize thicker steel for greater strength. They can also be made by adding track sections to the chord and web members, or by attaching two trusses web-to-web to make one truss. The girder truss can have a pitched top chord or a top chord parallel to the bottom chord.

13.3.3 Valley Truss

Gables that intersect and form "L" or "T" shapes on the roof plan can be framed with trusses. The trusses required in this situation are called valley trusses. Figure 13.2 shows valley trusses at an intersecting gable.

FIGURE 13.2 VALLEY TRUSSES

13.3.4 King Truss

A king truss has one or more vertical webs rather than sloped members Figure 13.3 is an example of a king truss used at a gable end.

FIGURE 13.3 KING TRUSS AND RAKE ASSEMBLY FOR GABLE

13.3.5 Half Truss

As suggested by the name, a half truss is half of a Fink truss. Half trusses are commonly used where a hip roof ties into a roof as shown in Figure 13.1.

13.3.6 Scissor Truss

A scissor truss has a special configuration where the bottom chords are sloped rather than horizontal as shown in Figure 13.4. A scissor truss is often used to frame a cathedral-type ceiling.

FIGURE 13.4 SCISSOR TRUSS

13.4 Preparation for Roof Truss Framing

A gable roof truss structure is used over the main body of the design house. The following sections describe how to prepare the house for the installation of the roof trusses. All exterior and interior load bearing walls must be adequately braced and plumb prior to the installation of the roof trusses.

13.4.1 Truss Delivery

Verify the truss order when it arrives at the building site. Each truss assembly should have an identifying mark (usually a code number) which will be shown on the layouts and schedules from the supplier.

Count the number of assemblies and check span length against the information on the schedule. Consult with the supplier if there are any discrepancies.

13.4.2 Truss Layout and Top Plate Preparation

The roof trusses in the design house are spaced at 24 in (600 mm) o/c. Because the load bearing exterior walls utilize 16 in (400 mm) spacing, this is a deviation from the principle of in-line framing for roofs, walls and floors. This design is acceptable, but requires a double wood top plate that serves as a bridge for roof loading onto the exterior wall studs.

The double top plate is made up of two 2 x 4 wood framing members. The double top plate is attached the top track of the wall from below, using two #10 2 – 1/2 in screws spaced 16 in (400 mm) o/c. The second plate is secured to the first (staggering the end joints) with two 2 – 1/2 in nails spaced 16 in (400 mm) o/c.

Mark the position of the trusses on the top plates of the supporting walls according to the blueprints and/or the roof truss schedule. Steel trusses will likely have the web facing in the same direction, with the possible exception of one gable-end truss. Check the manufacturer's specifications for information regarding the orientation of the trusses.

13.4.3 Temporary Working Platform

The installation of trusses will be easier and safer with the use of moveable scaffolding placed on the floor immediately below the roof. The floor should be sheathed and braced. If the subflooring is not installed, any working platform (i.e. OSB, plywood) lying on top of the floor joists must be temporarily tacked down to the joists to provide a safe and stable surface to walk on and work from.

13.5 Roof Truss Installation

13.5.1 Hoisting Roof Trusses

Trusses can be lifted into place using either mechanical lifting devices or 'manpower'. If a 'just-in-time' delivery is used, the delivery vehicle may assist with the hoisting if it is fitted with the proper equipment. Safety and care to avoid personal injury to workers is of paramount importance. Where several residential buildings are ready for roof framing, it may be advantageous (labour and time) to rent a small crane to hoist the roof trusses.

Trusses can be pulled up over the end of the house by rope, passed up between wall studs if clearance permits, or crane-hoisted in groups to rest on the top plates of each support wall. The trusses can temporaily rest upside down or the peak can rest on scaffolding or an interior wall.

Loading too many trusses on the support walls, without fastening them in place, may cause lateral (outward) thrust of the exterior support walls.

13.5.2 Installing the Roof Trusses

The following is a suggested procedure for installing the roof trusses, beginning with one gable end truss. It does not preclude any other procedure which the framers may find faster and easier. The procedure described below assumes that a rake assembly will be used for the gable end overhang.

- Temporarily screw vertical bracing into the end wall at the centre and quarter points. The termporary bracing will serve to support the gable end truss until the roof trusses are all installed and braced.
- Prepare the permanent roof truss bracing material and have it close at hand.
- Drag or "walk" a gable-end truss to the end wall , swing it upright and center it over the wall top plate supports and marks.
- Verify the position of the truss and ensure the overhangs are the same.
- Plumb the truss, clamp it to the temporary vertical bracing. Screw the bottom chord into the top plate of the end wall, using #10 1 – 1/2 in screws at 24 in (600 mm) o/c or as indicated on the blueprints.
- Brace the top of the truss to the floor or ground (use a steel or wood stud and stakes).
- All temporary bracing must be kept in position until the permanent bracing and roof sheathing is installed. The drawing should provide guidelines for truss bracing.
- With the gable end truss temporarily braced and plumb, move the next truss into position.
- Install the adjacent truss at the required spacing by fastening it to the top plate of the bearing walls, and with permanent or temporary bracing to the gable end truss.
- Follow the manufacturer's instructions for bracing installation. Permanent bracing can be progressively fastened to the trusses as they are installed. Truss bracing is usually attached to the underside of the top chord and top side of the bottom chord.

- Progressively install the trusses with bracing. It is important to keep the trusses secure and to prevent racking during this process.
- Bracing in the vertical plane of the truss is required as shown in Figure 13.5. This can take the form of 'X'-bracing. The X-bracing is usually only necessary on the four end trusses of the house.

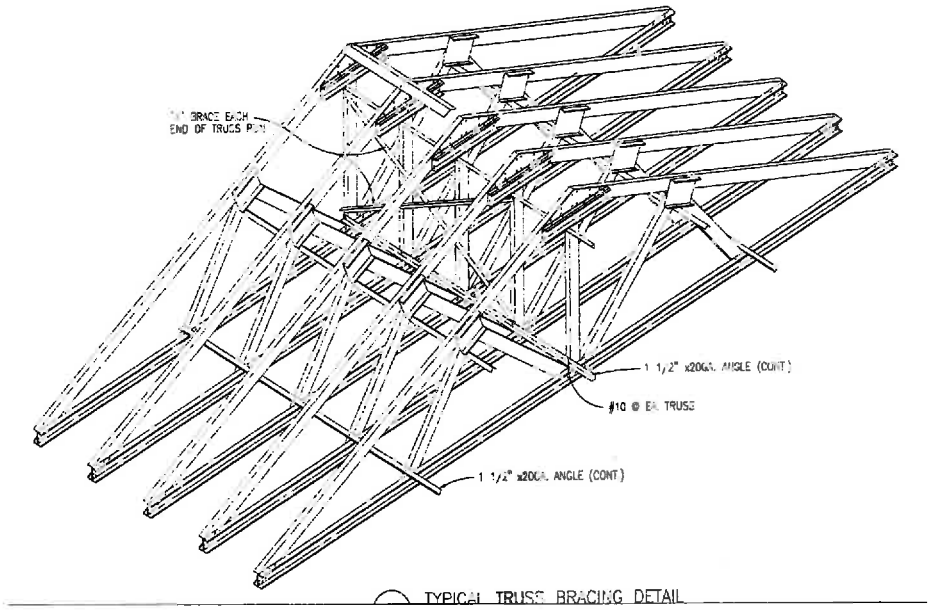

FIGURE 13.5 TRUSS BRACING

13.5.3 Finishing the Roof Frame

The gable end of the example house uses a **rake assembly** for the gable overhang. The fabrication of a rake assembly was described previously in Section 12.7.1. The rake is attached to the top chord of the gable end truss.

A **ridge cap** is a continuous member that covers the top of the trusses as shown in Figure 13.6. It is made from galvanized steel and formed in a press-brake to match the slope of the roof. The ridge cap is joined to each truss with two #8 pan head (or similar low profile) screws.

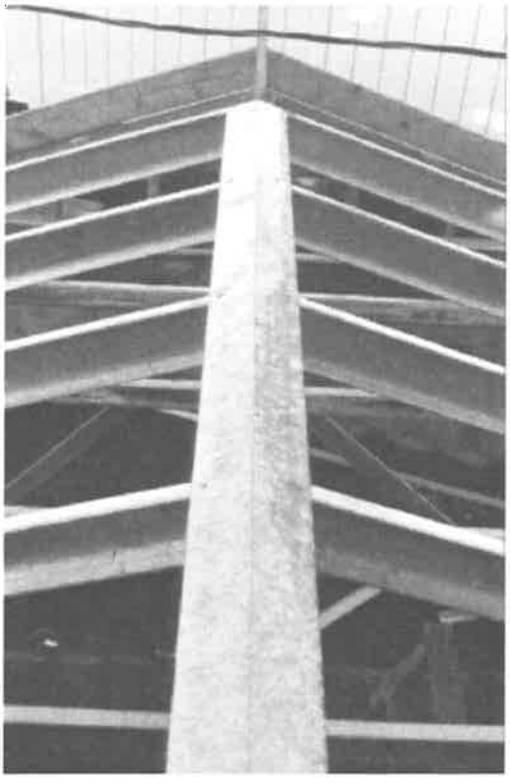

FIGURE 13.6 RIDGE CAP

14. HIP ROOFS

Chapter Objective

The purpose of this chapter is to introduce the student to the procedures for the layout and assembly of hip roofs. A description is provided for both stick-framed hip roofs and truss-framed hip roofs.

Steel framed roofs are similar to conventional wood rafter or truss construction. There is no prescriptive method for steel framed roofs (rafter or truss type) in Canada at this time. In the interim the builder must retain an engineer to design the roof framing members and connection details if the roof is to be framed with rafters or trusses.

Specific Learning Objectives

After completing this chapter the student should be able to:

Objective 14.1: Given residential blueprints and roof plans, identify the various roof types including gable roofs, hip roofs, and Dutch hip roofs.

Objective 14.2: Given various residential roof rafter/truss framing plans identify the following framing elements:
- roof ridge;
- common rafters;
- hip;
- hip rafters;
- hip jack rafters;
- valley;
- valley rafters;
- valley jack rafters.

Objective 14.3: Understand that roof framing systems must be designed and certified by a professional engineer.

Objective 14.4: Fabricate a hip rafter using the following two techniques:
- back-to-back track hip
- track-and-joist box hip

Objective 14.5: Given a set of blueprints, and working in a small team (three or four), demonstrate the ability to lay out and install LSF hip and jack rafters in an appropriate manner, paying particular attention to the following details of layout and assembly:
- identify and select the correct LSF materials, fasteners, and other accessories that should be used according to the plans;
- accurately layout the rafter and/or truss locations according to the plans;
- correctly locate and install hip rafters and jack rafters and/or half-trusses and step-down trusses;
- properly brace hip roof rafters/trusses using both roof sheathing on the top flange and steel bracing on the bottom flange.

Objective 14.7: Demonstrate the ability to select and use the appropriate fasteners and fastening systems for hip roof framing.

Objective 14.8: Demonstrate an awareness of the job and personal safety aspects of framing a hip roof, and exhibit safe framing practices with respect to framing at heights.

Suggested Activities

The recommended format for training is classroom discussion followed by hands-on construction of a small roof system. The instructor will need to determine in advance what kind of roof framing will be used for this chapter: rafter framing; truss framing; or both. This will have an impact on the material ordered.

The alternative to actually constructing a roof frame would be to visit a construction site while the roof is being framed, or to present a slide show showing roof systems in the process of being framed.

For hip roofs, the different styles of roofs must first be explained to the students, along with the different designations of rafters. Once this is done, the layout and assembly of a hip roof can be explained. To address the specific learning outcomes in the above objectives make sure that the following points are covered in the classroom discussion, site visits, and slide shows:

- Explain the advantages and disadvantages of roof rafter systems and roof truss systems for hip roofs;
- Using a set of blueprints, explain the hip roof framing system;
- Describe and fabricate both a back-to-back track hip rafter and a track-and-joist box hip rafter;
- Set up the scaffold and ladders in the construction area. Emphasize the safety requirements of installing and working on roofs;
- Show how to layout, cut, install, and fasten hip and jack rafters;
- Explain the importance of bracing hip roofs. Have the students install bracing as the hip and jack rafters are installed, using roof sheathing on the top flanges and flat strap bracing on the bottom flanges;

Materials and Equipment

The roof framing members, fasteners and accessories were ordered in a previous chapter. The equipment necessary for installing hip and jack rafters is the same as that listed in Chapters 12 and 13.

14. HIP ROOFS

14.1 Introduction

Steel framed roofs are similar to conventional wood rafter or truss construction. There is no prescriptive method for steel framed roofs (rafter or truss type) in Canada at this time. It is anticipated that a prescriptive method for steel framed roofs will be incorporated into the CSSBI *Steel Framing for Part 9 Construction* in the near future.

In the interim the builder must retain an engineer to design the roof framing members and connection details if the roof is to be framed with rafters or trusses. A second option is to use a proprietary manufactured truss system, also developed with professional design guidance and stamped by an engineer. The local building authority will normally accept this approach.

The purpose of this chapter is to introduce the student to the procedures for the layout and assembly of hip roofs. A description is provided for both stick-framed hip roofs and truss-framed hip roofs.

This chapter is divided into the following sections:

Section 14.2: Principles of Hip Roofs
Section 14.3: Stick-Framed Hip Roofs
Section 14.4: Truss-Framed Hip Roofs

The student is referred to the following sections of this document which have some bearing on the layout and installation of hip roofs:

Chapter 2: Job Health and Safety
Chapter 8: Fasteners
Chapter 11: Load Bearing Walls
Chapter 12: Roof Rafter Framing
Chapter 13: Roof Trusses
Chapter 17: Thermal, Vapour, and Air Barriers

14.2 Principles of Hip Roofs

After the exterior (and interior) load bearing walls are erected and braced, layout and assembly of the roof structure can proceed. The roof frame is usually sloped and built with rafters or trusses. CSSBI *Steel Framing for Part 9 Construction* does not include a design and selection procedure for roof rafters or trusses. A design professional must be retained to develop member size, roof design and connection details.

A hip roof is a style that alters the profile of a gable roof by sloping the roof toward the supporting (gable) end walls of the house. The roof typically consists of four sloping planes that intersect to form a pyramidal or elongated pyramid shape. Figure 14.1 shows a full hip roof. A modification of the hip roof, called a Dutch hip, is shown in Figure 14.2.

FIGURE 14.1 FULL HIP ROOF

FIGURE 14.2 DUTCH HIP ROOF

The "hip" is created by the diagonal intersection of planes in a hip roof. The hip is a ridge that extends from the roof ridge down to a corner of the house. Hip roofs can be framed using either roof rafters or roof trusses. An examination of each method is contained in the following sections.

14.3 Stick-Framed Hip Roofs

Contractors may choose to stick frame hip roofs using hip and jack rafters. The hip rafter starts at the ridge of the roof gable and spans to the corner of the house. The tail of the hip rafter extends over the top plate of the exterior load bearing wall.

The framing members in the hip roof, called jack rafters, require compound angle cuts where they frame into the hip rafter. Jack rafters sit on the top plate of the exterior load bearing wall in the same manner as roof rafters. They require two angle cuts at the hip end, one through the web of the rafter to match the slope of the roof, and one through the flange of the rafter to match the angle of the hip rafter.

Figure 14.3 shows the underside of a hip rafter spanning onto a corner with jack rafters framing into the hip rafter.

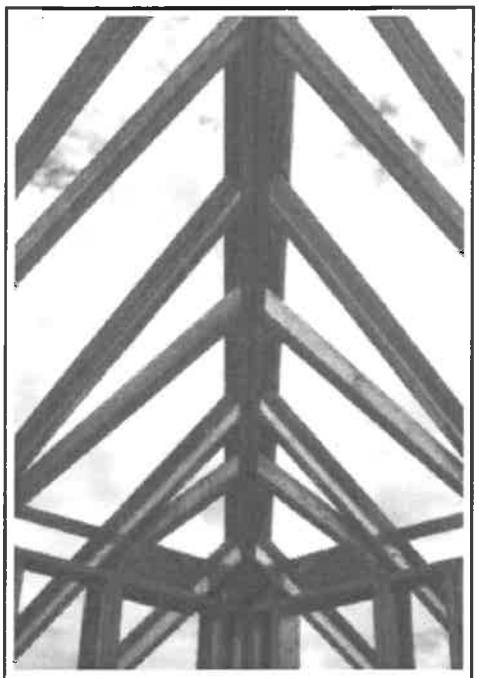

FIGURE 14.3 HIP ROOF FRAMING

A stick framed hip roof can be combined with a truss framed gable roof. The truss at the hip connection should be a girder truss (see Chapter 13 Section 13.3 for truss types) to support the substantial loading from the hip section.

Hips may be constructed in two ways:

- Back-to-Back Track Hips
- Track and Joist Box Hips

14.3.1 Back-to-Back Track Hip Rafters

Back-to-back track hips can be made using a procedure similar to roof ridge assembly (see Chapter 12 Section 12.8). LSF track material having the same web depth and steel thickness as the roof and jack rafters are positioned back-to-back on an angle to match the slopes of the roof. The tracks are secured through the web at one flange and separated at the other flange with a wedge.

Wedges can be made from flat steel stock, bent into a triangular shape to match the slope and angle of the hip. Figure 14.4 shows a prefabricated wedge for this purpose. A wedge can also be fabricated by the framer using sheet metal and aviation snips.

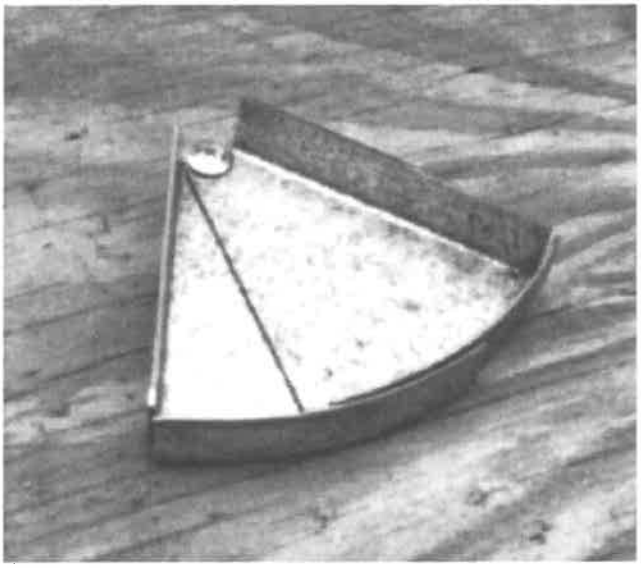

FIGURE 14.4 PREFABRICATED WEDGE

Clamp the track back-to-back, with the clamps near the radius of the web. Screw the webs of the track together near the flange with #10 screws. Remove the clamps, spread the tracks apart and insert a wedge near the hip top and screw it to each track with two #10 screws. Measure down the hip from the ridge, marking the hip rafter with the jack rafter spacing and continue installing wedges the length of the hip rafter. Mark the locations of the jack rafters on the top plate of the exterior wall.

Attach the top of the hip to the ridge member or girder truss. Use #10 screws and clip angles between hip tracks to make the connection. Attach the opposite end of the hip to the corner of the house at the top plate using #10 screws and clip angles between the two sections of track that make up the hip.

Figure 14.5 illustrates a back-to-back track hip.

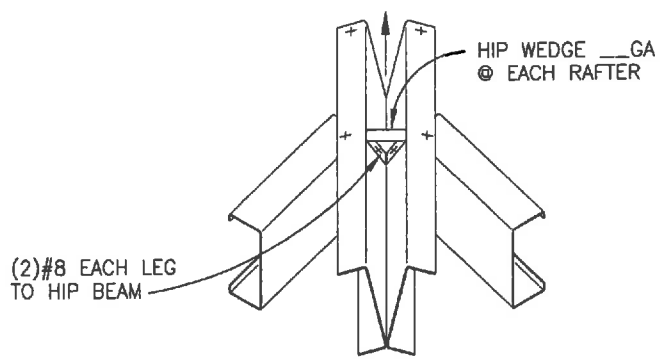

FIGURE 14.5 BACK TO BACK HIP

The jack rafters frame into the hip and line up with the wedges to prevent distortion of the track. They are miter cut to fit into the track section and secured through the top and bottom flange of the track with fasteners. A clip angle is added to this connection if required by the engineer (see Figure 14.6). The rafter web should face the house corner.

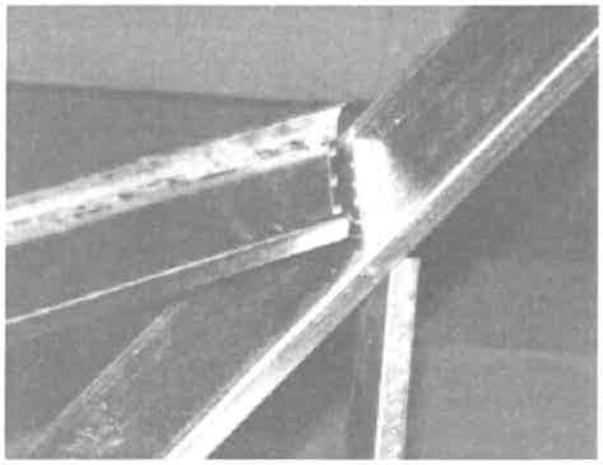

FIGURE 14.6 CLIP ANGLES FOR JACK RAFTER TO HIP CONNECTION

Depending on the ceiling joist configuration, the jack rafters may be attached to the ceiling joists where they rest on the exterior load bearing walls. An alternative is to use a clip angle, fastened into the top plate and to the web of the jack rafter. The tail end of the jack rafter will usually extend beyond the top plate to form the roof overhang for fascia attachment. Jack rafters may be seen in Figure 14.7.

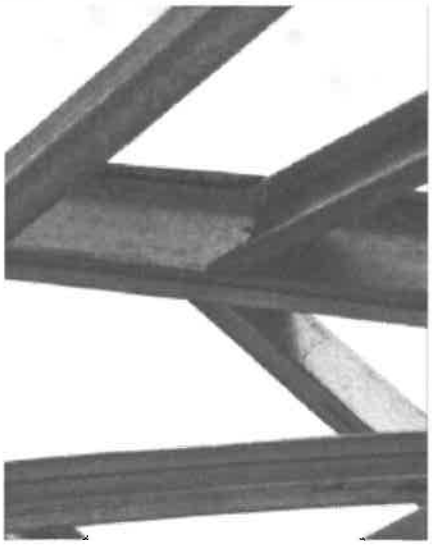

FIGURE 14.7 JACK RAFTERS

A ridge cap can be applied to the back-to-back track hip rafter if desired. Most steel-framing contractors choose to use a ridge cap, however it is only really necessary if called for in the engineer's design.

14.3.2 Track-and-Joist Box Hip Rafters

Track-and-joist box hips can be made using a procedure similar to roof ridge assembly. LSF track and joist material having the same dimensions and thickness as the roof and jack rafters are screwed together to make a box similar to a roof ridge assembly. Assemble the C-section and track section by fastening both the top and bottom flanges using #10 screws at 24 in (600 mm) o/c. Steel sections in a hip rafter should not be spliced.

Attach the top of the box hip rafter to the ridge member or girder truss. Use #10 screws and clip angles at each side of the box hip to make the connection. Attach the opposite end of the box hip to the corner of the house at the top track using #10 screws and clip angles on each side of the box hip.

Jack rafters frame into the box hip. They extend from the hip to the top plate and usually extend beyond leaving a tail overhang. Cut the jack rafters so they fit at the slope and angle along the length of the hip at the required spacing.

Use #10 screws and clip angles to attach the jack rafter to the box hip in a manner similar to attaching common rafters to a track-joist ridge assembly. This fastening system was detailed in Chapter 12 Section 12.6 Fastening Systems. Attach the jack rafter to the top plate of the exterior walls in a manner similar to that for the back-to-back track hip described above.

14.4 Truss-Framed Hip Roofs

Trusses greatly simplify hip roof construction. The two common types of trusses used for framing hip roofs are step-down and half trusses. These truss types were describe in Chapter 13 Section 13.3.

Step-down trusses are designed such that the top and bottom chords are horizontal and parallel. The slope of the end web member matches the slope of the hip. The height of each truss decreases with its position in the hip. The trusses get shorter as they progress towards the exterior walls of the house. Bracing members connect the truss top chords and serve as support for sheathing

Half trusses look like one-half of a Howe Truss. Half trusses are used for Dutch hip roofs. They are supported by a girder truss at one end and span to the wall supports as shown in Figure 14.8. The height of the half truss progressively decreases with position along the hip rafter.

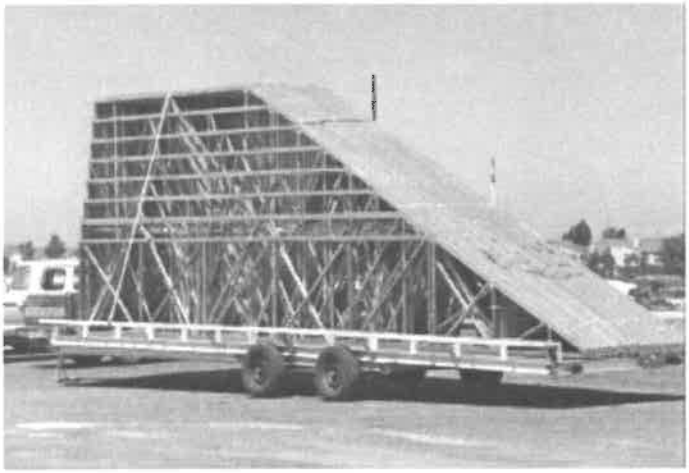

FIGURE 14.8 HALF TRUSSES

As with most truss framing, the manufacturer does the engineering and fabrication of the truss. The framer is required to erect the trusses according to plans and connection specifications. The student is referred back to Chapter 13 for truss layout and assembly.

15. SPECIALTY FRAMING

Chapter Objective

The purpose of this chapter is to describe how curved floor and wall openings, archways, and dormers are constructed using LSF framing materials. The application of drywall using both dry and wet techniques is briefly discussed.

In todays' residential market, conventional gable roofs are being replaced with hip roofs and dormers to add interesting roof profiles. Rectangular doorways and openings are often modified to curved archways. Main foyers are being built with curved walls and quarter-turn staircases. In this regard, steel framing must stay competitive and demonstrate its flexibility and versatility as a framing material.

Specific Learning Objectives

After completing this chapter the student should be able to:

Objective 15.1: Recognize that LSF material can be used to frame curved walls and floor openings, archways, and dormers.

Objective 15.2: Identify the various ways that wall and joist track can be bent into curves of various radii including:

- Ordering curved track section from a manufacturer;
- Ordering curved track from specialty companies who will bend the track to a specified radius;
- Using a manual track bending tool as described in Chapter 7, Section 7.5.3.

Objective 15.3: Given a set of blueprints, and working in a small team (three or four), demonstrate the ability to layout and assemble curved walls.

Objective 15.4: Describe the process for wet and dry application of drywall on a curved surface.

Objective 15.5: Given a set of blueprints, and working in a small team (three or four), demonstrate the ability to layout and assemble curved floor openings.

Objective 15.6: Given a set of blueprints, and working in a small team (three or four), demonstrate the ability to layout and assemble archways and other semi-circular and circular wall openings.

Objective 15.7: Given a set of blueprints, and working in a small team (three or four), demonstrate the ability to layout and assemble dormers.

Suggested Activities

The recommended format for training is classroom discussion followed by hands-on construction of curved walls, floor openings, archways, and a small roof system with a dormer. The instructor will need to determine in advance what kind of roof framing will be used for the dormer: rafter framing; truss framing; or both. This will have an impact on the material ordered.

Time should be spent on how to do the framing for each item, with an allowance to answer questions. If time does not allow these features to be assembled by the students, advance preparation of a mock-up of each feature would be beneficial to the students. Another alternative to actually constructing these specialty framing features would be to visit a construction site while they are being framed, or to present a slide show showing these features in the process of being framed.

The students should be shown how to cut and bend track to fit a specified radius. While the application of drywall to curved walls is normally the job of a drywaller/lathing applicator, the students will have a better understanding of the drywall complications that can result if the framing of a curved wall or opening is not designed and assembled appropriately.

Materials and Equipment

The following material may be necessary for this chapter if any of the specialty framing items are to be attempted:

Item	Quantity
Sample track bent to specified radius	1
Slide show showing the specialty items	1
Wall studs and track	-
Floor joists and track	-
Fasteners, clip angles and accessories	-
LSF material for dormer construction	-
4x8 Drywall 3/8 in	5

15. SPECIALTY FRAMING

15.1 Introduction

The residential market of today is extremely competitive. Home builders are including many "extras" in their homes to attract customers and make their homes more desirable. At the same time, consumers are demanding more intricate features in their homes, especially in the larger custom-designed homes.

Conventional gable roofs are replaced with hip roofs and dormers to add interesting roof profiles. Rectangular doorways and openings are often modified to curved archways. Main foyers are being built with curved walls and quarter-turn staircases. In this regard, steel framing must stay competitive and demonstrate its flexibility and versatility as a framing material.

The purpose of this chapter is to describe how curved floor and wall openings, archways, and dormers are constructed using LSF framing materials. The application of drywall using both dry and wet techniques is briefly discussed.

This chapter is divided into the following sections:

Section 15.2: Curved Walls
Section 15.3: Curved Floor Openings
Section 15.4: Archways and Wall Openings
Section 15.5: Dormers

The student is referred to the following sections of this document which have some bearing on the layout and installation of walls, floors, and roof systems:

Chapter 7: Tools
Chapter 8: Fasteners
Chapter 10: Floor Joists
Chapter 11: Load Bearing Walls
Chapter 12: Roof Rafter Framing
Chapter 13: Roof Trusses
Chapter 14: Hip Roofs
Chapter 16: Non-Load Bearing Walls

15.2 Curved Walls

Curved walls, both non-load bearing and load bearing, can be framed using light gauge steel in much the same way that straight walls are framed. Curved walls will require that the bottom and top track be curved in some manner, to create the required curvature. The wall studs fit into the track sections the same way as they do for straight walls. The track section used for curved walls should be at least the same steel thickness as the wall studs.

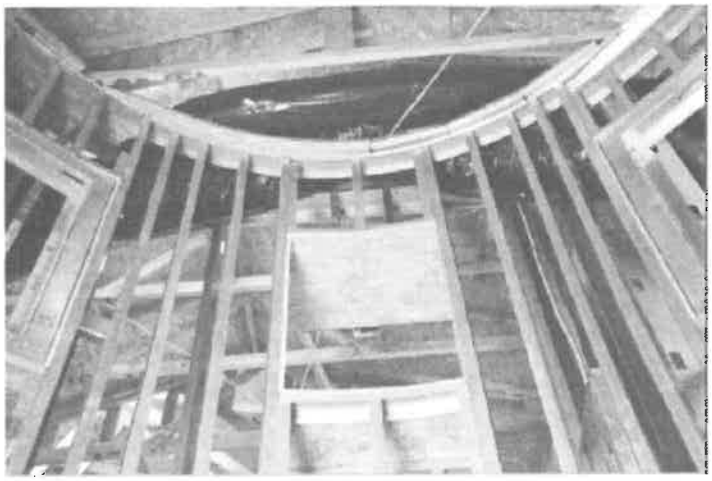

FIGURE 15.1 CURVED WALL

The minimum radius allowable for LSF curved walls is not limited by the capabilities of the steel material, but rather by the wall finish/sheathing to be applied over the steel studs. Minimum radii for drywall applications (dry and wet) are provided later in this chapter for information purposes.

15.2.1 Curved Track Section

Three different options are currently available to curve track section. These techniques include the following:

- The framer can order curved track, shaped to a specified radius, from the fabricator;
- The framer can shape the track to a specified radius at the job site by cutting the flange and web;
- The framer can shape the track to a specified radius at the job site by using a manual track bending tool as was described in Chapter 7 Section 7.5.3.

FIGURE 15.2A CURVED TRACK

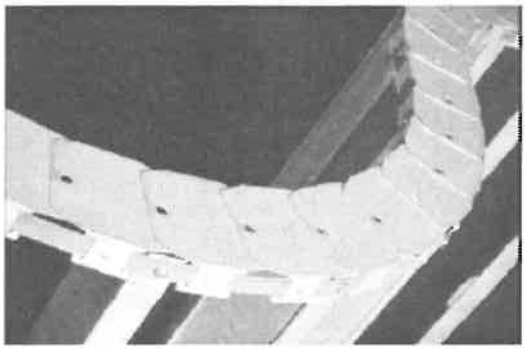

FIGURE 15.2B FLEX-C TRAC™

15.2.1.1 Ordering Curved Track Section

Track may be ordered from fabricators who specialize in fabricating curved wall track. Specialty companies use machinery to bend the track without slitting the flanges. This provides a clean, neatly bent track to an exact radius. Track may be bent around the flanges or the web. Wall track is bent around the flanges and joist track is bent around the web.

An alternative to bending track sections is a product called Flex-C Trac ™ which is comprised of pivotal sections of track linked by a metal strip through the flanges.

15.2.1.2 Cutting and Bending Track Section

If the framer chooses to bend the track on the job site, one option is to cut the track section in the following manner. Cut one flange and the web on the top and bottom track at 2 in (50 mm) intervals for the length of the curved section of wall. The flange on the **inside** of the radius will not be cut. Leave at least 12 inches of uncut track at either end of the arc. Bend the track to the desired radius.

Support the cut flange side of the track section with a piece of 1 in (25 mm) wide 0.018 in (0.46 mm) thick steel strap fastened to the inside of the flange with a set of locking clamps.

15.2.1.3 Crimping and Bending Track Section

A manually operated tool is available that will bend track section in the plane of the web. The tool works on a crimping principle similar to reducing the diameter of a circular heating duct. The bending tool is capable of bending track section to make curved walls, bulkheads, and archways.

The manufacturer of this bending tool claims it can handle steel thicknesses up to 0.033 in (0.84 mm), web depths up to 6 in (152 mm), and that it can bend both track and stud sections. This tool was previously described in Chapter 7 Section 7.5.3.

15.2.2 Framing Curved Walls

Curved wall framing begins with laying out the location of the wall using the blueprints. Most curved walls will have a radius identified on the plans. Identify which walls are 'chase walls'. These walls may require studs and track with a larger web, normally 6 in (152 mm) studs for plumbing and HVAC ducts.

If the wall has straight sections at either end, layout and mark these wall locations first, noting where the curve begins and ends. The radius can be scribed by first finding the center of the circle. Drive a nail into the subfloor at the centre and tie a piece of string to the nail. Pull the string taut and measure the wall radius along the string. Hold a carpenter's pencil on the string at this dimension and scribe the arc from one straight wall section to the other.

The top track can be marked on the overlying joists using a plumb bob or levelled wall stud, by following the wall location marked on the subfloor. Where a wall runs parallel to the floor joists above, and is located between two joists, a short section of stud or track can be attached at 24 in (600 mm) o/c between the bottom flanges of the joists to secure the top track.

Curved walls are normally framed 'in-place'. This technique, also known as 'stick built' framing, begins with the top and bottom track screwed into the subfloor and ceiling joists. The studs are then twisted into the track at the appropriate spacings.

Attach the bottom track to the subfloor and the top track to the overlying joists by following the layout markings. Use #8 self-drilling screws spaced at 24 in (600 mm) o/c. Closer spacing may be required with tight radii to firmly fix the track sections in place.

Position the studs in the track with their open sides facing in the same direction. Do not fasten the studs in place until they are all inside both the top and bottom track. Make sure a stud is located at each end of the arc. Screw each stud to the top and bottom track flange on both sides of the wall.

Cross-bracing is redundant on curved walls because the studs are not in a plane. Horizontal bracing is required for load bearing walls to prevent the studs from rotating under axial loading. Curved walls that are load bearing must be designed by a design professional.

15.2.3 Drywall Application

Drywall may be installed on curved walls using either wet or dry techniques. The radius of the curved wall and the drywall thickness will determine the application that should be used. Improper drywall

application, extremely tight radii, and insufficient stud spacing, could result in cracks or flat spots in the curved wall.

Drywall may be attached either parallel (vertical) or perpendicular (horizontal) to the studs. The application of drywall to steel studs in curved walls is essentially the same as wood framing. Drywall screws (#6 bugle head) can be used to attach drywall to steel framing members. Drywall screws should be used with a depth-sensitive nosepiece and screw gun to avoid breaking the paper surface of the drywall.

The standard fastener for interior non-load bearing walls is a #6 7/16 in (11 mm) or 1 – 1/4 in (31 mm) self-piercing bugle head screw. This screw can be used for steel thicknesses up to 0.033 in (0.84 mm). For steel thicknesses greater than 0.033 in (0.84 mm) use a #6 1 – 1/4 in (31 mm) self-drilling screw. The drywall should be applied by attaching one end completely and gently bending the drywall around the studs, fastening the drywall to one stud at a time.

Drywall is sometimes applied with construction adhesive and screws. Most LSF members will be coated with a lightweight oil or grease from the manufacturer. The adhesive may not adhere to studs that have not been cleaned prior to the application of the drywall. The drywall applicator should use caution when applying drywall to oily studs. Oily finger and handprints on the drywall may cause some difficulties for paint adhesion.

15.2.3.1 Dry Application

Table 15.1 provides the minimum allowable radius that can be used for curved walls when drywall of varying thicknesses is applied using a dry technique.

Table 15.1: Minimum Wall Radii for Dry Drywall Application

Drywall Thickness		Minimum Wall Radius			
in	mm	Horizontal Application		Vertical Application	
		ft	m	ft	m
1/2	13	20	6.1	n/a	n/a
3/8	10	7 1/2	2.3	25	7.6
1/4	6	5	1.5	15	4.6

Source: Residential Steel Framing Handbook, Scharff, Robert p. 277

15.2.3.2 Wet Application

Table 15.2 provides the minimum allowable radius that can be used for curved walls when drywall of varying thicknesses is to be applied using a wet technique. The table also provides the maximum stud spacing required to avoid flat spots and/or cracks in the drywall, and the amount of water needed to dampen the drywall. The application is similar to the dry application technique. One end of the drywall is completely fastened to a stud, and the drywall is gently bent around and fastened to each successive stud in the curved wall.

Table 15.2: Minimum Wall Radii for Wet Drywall Application

Drywall Thickness		Minimum Wall Radius		Length of Arc		No. of studs on arc and tangents	Maximum stud spacing		Water required per drywall panel side
in	mm	ft	m	ft	m		in	mm	oz
1/4	6	2	0.61	3.14	0.96	8	6	152	30
1/4	6	2.5	0.76	3.93	1.20	9	6	152	30
3/8	10	3	0.91	4.71	1.44	9	8	203	35
3/8	10	3.5	1.07	5.5	1.68	10	8	203	35
1/2	13	4	1.22	6.28	1.91	8	12	305	45
1/2	13	4.5	1.37	7.07	2.15	9	12	305	45

Source: Residential Steel Framing Handbook, Scharff, Robert p. 278

15.3 Curved Floor Openings

Curved floor openings are often used in entrance foyers where an open entrance way is desired by the home buyer. Quarter-turn staircases and second floor 'balconies' overlooking the main entrance way to the home add a sense of space and grandeur to a home.

Unlike conventional rectangular floor openings, there is no prescriptive method for designing curved floor openings. Where such a floor opening is desired by the home buyer it must be designed by a professional engineer. An example of a curved floor opening is shown in Figure 15.3.

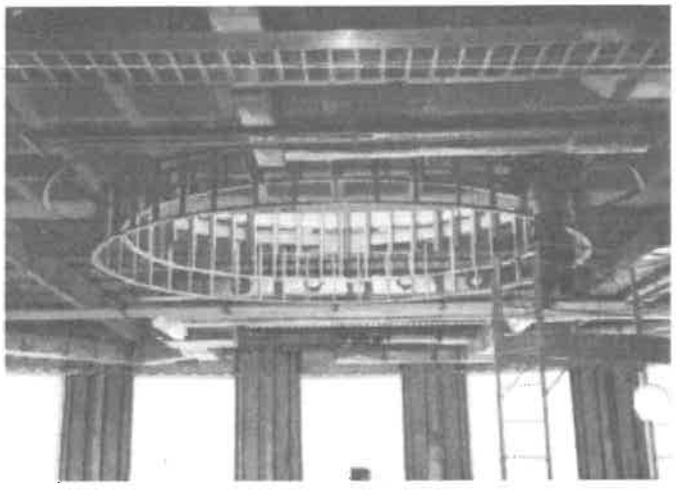

FIGURE 15.3 CURVED FLOOR OPENING

Curved floor openings will require joist track to finish off the ends of the floor joists and form the curved portion of the opening. Each floor joist must be cut to length and at the appropriate miter to fit into the track.

The track acts like a rim joist in a floor system, and is attached to the floor joists in exactly the same manner. Clip angles connect the floor joists to the track, and the joist and track are screwed at the top and bottom flange. Low profile head screws must be used to connect the flanges, and to connect the track to the clip angles.

Unlike wall track for curved walls, the track for curved floor openings must be bent along the web. The track may be ordered shaped to the appropriate radius, or the contractor may shape the track in the field by snipping the flanges and bending the track as required. Depending on the direction of curvature, 'V' notches may have to be cut in the flange to allow the track to bend.

Drywall can be attached to the face of the track in the similar manner as described in the previous section.

15.4 Archways and Wall Openings

Archways and other circular and semi-circular wall openings add a 'Mediterrean' look to the inside of a home. Figure 15.4 contains a picture of an archway. The curved portion of the wall opening is framed using wall track that is bent to the required radius and then covered with drywall or other interior finishes.

FIGURE 15.4 ARCHWAY

Unlike the techniques for bending wall track for curved walls, the track section is cut in the same manner as the joist track for a curved floor opening. The track is normally bent with the web facing the opening so the flanges can be screwed to the jack studs and header.

Mark the beginning of the arch on the jack studs and mark the centre line of the header. Snip and/or notch the flanges on that portion of the wall track that will be used to form the arch. On one side of the opening, screw the track flange into the jack stud using low profile head screws. Shape the track section to match the desired radius for the archway and screw the other end of the track into the jack stud on the other side of the opening.

If the track touches the header it may also be fastened with screws. If the track does not touch the header, the framer may have to cut and install a couple of short wall studs between the header and the arch to stabilize the track section until the drywall is applied.

If the wall containing the arch is a load bearing wall, a properly designed lintel must be used above the opening.

15.5 Dormers

Dormers break up the plane of gable roofs and can add space to the inside of the house. They conveniently act as 'nooks' in bedrooms and hallways, often providing a spot for a window seat or quiet reading place. An example of a dormer is seen in Figure 15.5.

FIGURE 15.5 DORMER

Dormers are very popular and are used quite often in Cape Cod style homes with steep roof pitches. The roof opening for a dormer is framed by doubling up the roof trusses with a girder truss or using double rafters on each side of the dormer. Double headers are installed at the top and bottom of the dormer opening in a manner similar to a floor opening. The framing for a dormer must be designed by a professional engineer.

The walls of a dormer are built as load bearing walls on or against the side of the girder trusses (or double rafters). The roof of the dormer can be framed with trusses or rafters, and take on the shape of a hip or gable roof, depending on the designer's or homeowner's preference. The framer may size the studs and joists in the dormer the same as the stud and joist sizes in the house. However, because it forms part of the roof system, local building authorities will require an engineer to approve the design.

16. NON-LOAD BEARING WALLS

Chapter Objective

The purpose of this chapter is to describe and practice the methods for non-load bearing wall layout and assembly. Framing techniques for intersecting walls, door and wall openings are discussed. Special framing and blocking considerations for cabinets, shelves, and assorted trim work is also described in this chapter.

Non-load bearing walls are generally installed after the load-bearing floors, walls, and roof members are properly braced and fastened in place. They are different from load bearing walls in that they are not designed to support an overlying live and dead load or resist lateral loading (wind and seismic loading)

Non-load bearing walls are often used as partition walls that divide the plan area of a floor into rooms. This chapter discusses non-load bearing wall layout and assembly, as well as drywall application, the installation of baseboards and cabinets, and special provisions for towel racks, handrails, grab bars, chair rails and ceiling moldings.

Specific Learning Objectives

After completing this chapter, the student should be able to:

Objective 16.1: Recognize the function, application, and limitations of non-load bearing walls.

Objective 16.2: Identify and describe the two following techniques used for non-load bearing wall construction:

- 'Tilt-Up' wall construction
- 'In-Place' wall construction

Objective 16.3: Given a set of blueprints, and working in a small team (two or three), demonstrate the ability to lay out and assemble LSF non-load bearing walls in an appropriate manner, paying particular attention to the following details of layout and assembly:

- identify and select the correct size of wall track, wall studs, fasteners and other material that should be used according to plans;
- layout the wall on a platform that is consistent with tilt-up and in-place framing techniques;
- mark and frame a rough opening for a door and wall opening;
- state the purpose for wood bucks in a rough opening and install them in the appropriate manner;
- correctly locate and install the studs necessary for corners and intersecting walls;
- recognize the importance of aligning punchouts in a wall;
- properly brace a LSF non-load bearing wall using drywall;
- erect an assembled LSF non-load bearing wall, ensuring it is plumb and level, anchor the wall to a subfloor and install temporary bracing;
- demonstrate how intersecting walls are tied together using both the extra stud and blocking techniques;
- splice non-load bearing wall track together.

Objective 16.4: Select the appropriate fasteners and apply drywall to non-load bearing walls

Objective 16.5: Describe the techniques and tools available for attaching accessories and trim such as baseboard, chair rail, ceiling molding, door and window trim.

Objective 16.6: Describe the techniques available for attaching cabinets and shelving to a steel frame.

Objective 16.7: Demonstrate the ability to select and use the appropriate fasteners and fastening systems for non-load bearing wall assembly;

Suggested Activities

The recommended format of training is classroom discussion followed by hands-on construction of non-load bearing LSF walls. A platform such as a floor system should be constructed for the walls to be built on. Explain the function of non-load bearing walls, typical stud sizes, and specifications. Discuss the different ways to build interior non-load bearing walls.

For non-load bearing walls the entire layout and assembly process must be explained first, prior to the students attempting to lay out and assemble the wall. To address the specific learning outcomes in the above objectives make sure that the following points are covered in the classroom discussion and wall assembly:

- using a set of blueprints, identify the length of the walls being framed;
- illustrate how the wall is marked for layout and have the students layout the walls and assemble them;
- in the case of 'in-place' framing show how the top and bottom track are located and fastened to the joists; show how to secure the top track to the ceiling above for both parallel joists and or perpendicular joists.
- show how to mark for rough openings; include at least one door and one wall opening;
- discuss the benefits of using wood to line door and window openings and show how to leave a space for a wood buck.
- show how to complete a rough opening, then let the students complete the rough openings;
- explain how the wall corners and intersecting walls are designed and how to layout and mark the extra studs needed for the corners;
- discuss the importance of aligning punchouts in all wall studs;
- show how the walls are temporarily braced to preserve squareness of the wall;
- explain the importance of making sure all the fasteners are applied;
- have the students build at least two non-load bearing walls and one intersecting wall;
- discuss with the students how to prepare to erect the walls and have temporary bracing ready (tilt-up construction);
- assist the students in erecting all the walls and bracing them; show the students how to plumb, level, and connect intersecting walls together.
- show how drywall is installed in a sample section of the wall framing.
- show how baseboard is installed using nails, screws, or adhesive.
- show how cabinets are installed directly to the studs, or to wood or steel blocking.

Materials and Equipment

The framing for the interior walls was ordered as part of previous sections in this manual. The following material may be necessary for this chapter:

Item	Quantity
Plumb bob	1
Magnetic level	1
Drywall, 3/8 in, 4' x 8' sheet	10
Drywall screws, No. 6 self-piercing bugle head	500
Deflection Track	2
Chalk line	1
Wood 2x4s for wood bucks, 8'–0"	4
Wood 2x6s and LSF Joists for blocking	-
Sample pieces of baseboard trim	1
Nail gun, adhesive, and nails for applying baseboard	1
Finish head screws for baseboard	12
Sample cabinet screws	12
Sheet Steel	-

16. NON-LOAD BEARING WALLS

16.1 Introduction

Non-load bearing walls are generally installed after the load-bearing floors, walls, and roof members are properly braced and fastened in place. They are different from load bearing walls in that they are not designed to support an overlying live and dead load or resist lateral loading (wind and seismic loading)

Non-load bearing walls are often used as partition walls that divide the plan area of a floor into rooms. This chapter discusses non-load bearing wall layout and assembly, as well as drywall application, the installation of baseboards and cabinets, and special provisions for towel racks, handrails, grab bars, chair rails and ceiling moldings.

This chapter is divided into the following sections:

Section 16.2: General Information
Section 16.3: Wall Layout and Assembly
Section 16.4: Corner Framing
Section 16.5: Door and Wall Openings
Section 16.6: Drywall Installation
Section 16.7: Special Considerations

The purpose of this chapter is to describe the methods for non-load bearing wall layout and assembly. Framing techniques for intersecting walls, door and wall openings are discussed. Special framing and blocking considerations for cabinets, shelves, and assorted trim work is also described in this chapter.

The student is referred to the CSSBI publications for further information about non-load bearing walls. The student is also referred to the following sections of this manual that will have some bearing on the layout and assembly of non-load bearing wall systems:

Chapter 8: Fasteners
Chapter 10: Floor Joists
Chapter 11: Load Bearing Walls
Chapter 17: Thermal, Vapour, and Air Barriers
Chapter 19: Utilities – The Other Trades

16.2 General Information

Non-load bearing steel construction is recognized in Part 9 of both the *NBCC* and *OBC*. These codes set standards for stud size, spacing, fastening systems, maximum height and deflection, bracing, installation, sheathing and other requirements. Two CSSBI publications, *Installation Manual* and *How to Install Light Gauge Steel Framing* provide some additional guidance to the framer.

Non-load bearing walls are not part of the structural system of a dwelling. Non-load bearing walls are only required to carry their own weight (studs and drywall). Because they are not important to the structural capabilities of the home, framers do not need to address the in-line framing requirements previously described in Chapters 4, 10 and 11.

16.2.1 Non-Load Bearing Studs

The studs for non-load bearing walls can be the same size and thickness as load bearing studs, however, less expensive non-load bearing studs can be used for these walls. The characteristics of non-load bearing studs were described in Chapter 3 Section 3.4.3. They are typically 32 x 92 x 0.46 and 32 x 92 x 0.84 for residential partition walls to maintain a nominal four inch wall thickness.

16.2.2 Commercial Applications

Commercial framers will normally use 0.018 in (0.46 mm) **drywall studs** to frame non-load bearing (partition) walls. Drywall studs are made of thinner steel and have a smaller flange of 1 -1/4 in (32 mm) as compared to the 1 – 5/8 in (41 mm) flange of a load bearing stud.

16.2.3 Residential Applications

Residential framers sometimes prefer to use studs with a minimum thickness of 0.033 in (0.84 mm) for non-load bearing walls to minimize stud damage during construction. While structurally not necessary, the 0.033 in (0.84 mm) studs are often selected and used for their durability where residential framers and drywallers are working in tight quarters.

16.3 Wall Layout and Assembly

16.3.1 General Information

Non-load bearing wall framing is very similar to load-bearing wall framing in terms of layout and assembly. Before beginning, framers should consider the advantages and disadvantages of using one of the following techniques for non-load bearing wall construction:

- 'Tilt-Up' Wall Assembly
- 'In-Place' Wall Assembly

Regardless of the assembly technique used, non-load bearing walls differ from load bearing walls in that the studs do not need to bear tightly against the web of the track. Diagonal and lateral bracing is not required.

Walls parallel to the floor joists underneath must be supported by a double joist. Walls at right angles to the floor joists are not restricted as to location or require any special underlying support. Where a non-load bearing wall runs parallel to the floor joists above, and is located between two joists, a short section of stud can be attached at 24 in (600 mm) o/c between the bottom flanges of the joists above to secure the top track. The stud flanges are coped for a flat fit.

16.3.2 'Tilt-Up' Wall Assembly

Non-load bearing walls can be laid out and assembled on a horizontal platform such as the subfloor and then tilted up into place. Walls framed in this manner use the same techniques that were described in Chapter 11 Section 11.3 for load-bearing walls, except that #6 self-piercing screws may be used for steel up to 0.033 in (0.84 mm) thick. The other exception is that the sheathing, normally drywall, is not attached to the wall until it is securely in place.

In addition to the layout and assembly instructions provided in Section 11.3, the following additional points should be considered:

- clean the floor area before attempting to layout the walls;
- measure and mark the locations of all non-load bearing walls using chalk lines; mark on which side of the line the wall is to be located;
- identify which walls are 'chase walls'; these walls may require studs with a larger web, normally 6 in (152 mm) studs for plumbing and HVAC ducts;
- cut non-load bearing track to match the floor layout.
- identify locations for closet doors, passage doors, or other wall openings;
- at door openings, use a stud–track assembly as shown in Figure 16.1 below; use either a load bearing stud or a wood buck at the hinge and strike sides;

- once the wall has been assembled and tilted up into place, secure the bottom and top track with #8 self-piercing screws spaced no more than 24 in (610 mm) apart, with a fastener not more than 2 in (50 mm) from each end.

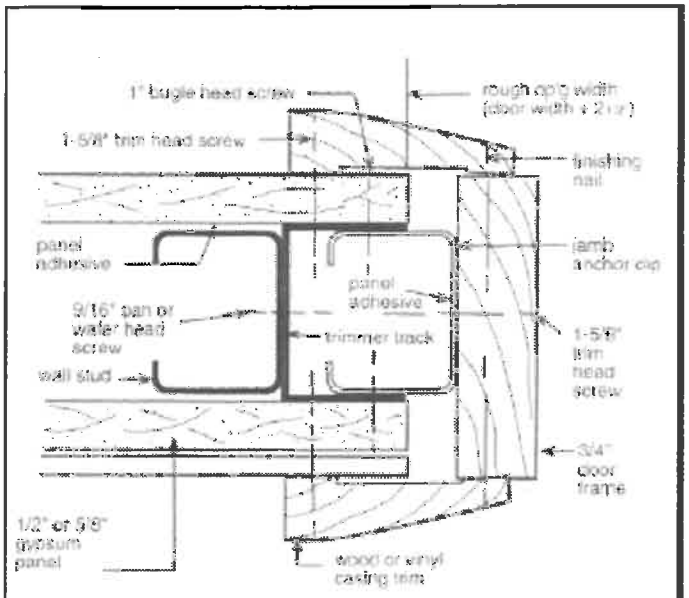

FIGURE 16.1 STUD-TRACK ASSEMBLY FOR DOOR OPENING

16.3.3 'In-Place' Wall Framing

Non-load bearing walls are typically framed 'in place'. This technique, also known as 'stick built' framing, begins with the top and bottom tracks screwed into the floor and ceiling. The studs are then twisted into the track at the appropriate spacings.

Clean the floor area before attempting to layout the walls. Measure and mark the locations of all non-load bearing walls using chalk lines, marking on which side of the line the wall is to be located. Identify which walls are 'chase walls'. These walls may require studs with a larger web, normally 6 in (152 mm) studs for plumbing and HVAC ducts.

Cut non-load bearing track to match the floor layout and attach the bottom track to the floor. Use a magnetic level on a stud to locate the top track location on the ceiling joists. Use a plumb bob on a string to mark the location of the top track for sloped walls or cathedral ceilings that are higher than normal walls.

Where the interior wall runs parallel to the top joists or trusses, use pieces of track or stud material as blocking every 24 in (600 mm) as shown in Figure 16.2. Cut the blocking 2 in (50 mm) longer than the distance between the joists. Clip the flanges off 1 in (25 mm) on each side to allow the webs to lap over the joists. Screw the blocking on both ends with two # 8 self-drilling screws. Screw the top track to the ceiling using #8 self-drilling screws at 24 in (610 mm) o/c.

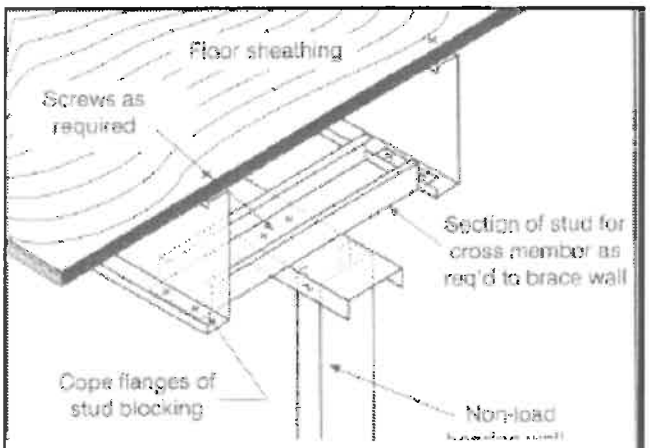

FIGURE 16.2 TOP OF NON-LOADBEARING WALL PARALLEL TO JOIST

Mark the bottom track for stud spacings. Identify locations for closet doors, passage doors, or other wall openings. At door openings leave 1 ½ in (38 mm) from the edge of rough openings to allow room to wrap the doors with wood bucks. (See Figure 16.3.)

FIGURE 16.3 WOOD BUCKS

If layout starts on one side of the house, the open side of the C-shape should be pointed in that direction. All studs should be oriented in the same direction especially when using 0.018 in (46 mm) studs. Twist the studs into place and secure the flanges on both sides of the track with #6 or #8 self-piercing screws at the top and bottom. When working with the non-load bearing steel, try to install the screw close to the web of the stud where there is more rigidity in the flange

NOTE: *Where the designer anticipates significant vertical movement of ceiling joists or roof trusses, deflection track should be used to allow the ceiling to move up and down without lifting or loading the partition wall.*

16.4 Corner Framing

Blocking and/or extra wall studs may be required when two walls intersect. The two possible conditions are when a non-load bearing wall intersects an exterior or interior load bearing wall, and when two or more non-load bearing walls intersect.

16.4.1 Non-Load Bearing Wall Intersecting a Load Bearing Wall

Figure 16.4 shows details of a non-load bearing wall framed into an exterior load bearing wall. The non-load bearing wall requires either an extra stud (Figure 16.4a) or blocking (Figure 16.4b) in the exterior wall. The stud or blocking will serve not only as a means for attaching the non-load bearing wall, but also as a backer for the drywall on the exterior wall. Not shown in Figures 16.4a and 16.4b is the vapour barrier normally installed on the warm side of the exterior wall. The framer should provide a strip of vapour barrier material spanning between adjacent studs and from floor to ceiling. The barrier can be held in place with two-sided tape until installation of the first interior wall stud and drywall.

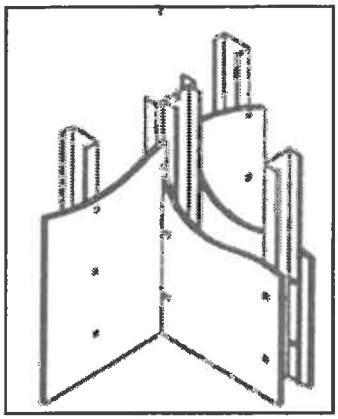

FIGURE 16.4a
STUD BACKING FOR INTERIOR NON-LOAD BEARING WALLS

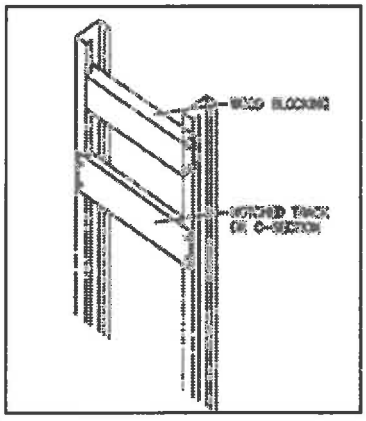

FIGURE 16.4b
BLOCKING FOR INTERIOR NON-LOAD BEARING WALLS

If an extra stud is used, position a 6 in (152 mm) or larger stud with the web side of the stud against the inside edge of the track of the exterior wall so that the web of the stud serves as a connecting surface for the non-load bearing wall and drywall.

If blocking is used, minimum 3 5/8 in (92 mm) blocking spaced at 24 in (610 mm) o/c may also be used between the exterior wall studs to attach the non-load bearing walls. Blocking may be made from joist or track material. If blocking is used, and drywall is being applied horizontally, be sure to have one piece of blocking located to straddle the drywall joints.

16.4.2 Non-Load Bearing Wall Intersections

When two non-load bearing walls intersect, two attachment details can be used. A procedure similar to an interior non-load bearing wall intersecting an exterior load bearing wall can be used, as was shown in Figure 16.4.

The alternative is to add an additional stud in one of the non-load bearing walls. The stud should be placed 3 in (75 mm) in from the end of the wall, and used to attach the walls together and serve as backing for the drywall.

16.5 Door and Wall Openings

Openings in non-load bearing walls tend to be less sturdy than in load-bearing walls because of the thinner steel used in the studs. Special attention should be given to them, particularly in high traffic areas. If any questions as to stability and strength are raised, openings can always be framed with load bearing studs provided that the non-load bearing studs used in the wall have the same web depth (normally 92 mm) as the load bearing studs.

16.5.1 Options for Framing Openings

Different options exist for framing the rough opening, and will depend on the function and nature of the opening.
For door openings, the hinge and jamb sides of the opening can be lined with wood studs as was shown in Figure 16.2. The framer must allow 1 1/2 in (38 mm) on each side of the opening to install wood studs the full length of the opening.

The alternative is to use a non-load bearing steel stud and track assembly as was shown in Figure 16.1. The assembly should be turned with the stud web facing the opening.

Wood or steel can be used for the head of an opening. If using steel, cut the stud 2 in (50 mm) longer than the opening, and cut the web back 1 in (25 mm) on each end, so the flanges protrude an extra inch on each side, then screw into place. Install the cripple studs above the door opening as necessary to match the drywall layout.

16.6 Drywall Installation

Drywall may be attached either parallel or perpendicular to the studs. The application of drywall to steel studs is essentially the same as wood framing. There are a few exceptions and special considerations for steel framing.

Drywall screws (#6 self-piercing bugle head) can be used to attach drywall to steel framing members. Drywall screws should be used with a depth-sensitive nosepiece and screwgun to avoid piercing the drywall.

The standard fastener for interior non-load bearing walls is a #6 1-1/4 in (31 mm) self-piercing screw. The screws should be spaced 16 in (405 mm) o/c in the panel field and edges for non-load bearing walls. Load bearing walls require screws placed 12 in (305 mm) o/c.

Drywall is sometimes applied with construction adhesive. Most LSF members will be coated with a lightweight oil or grease from the manufacturer. The adhesive may not adhere to studs that have not been cleaned prior to the application of the drywall. The drywall applicator should use caution when applying drywall to oily studs. Oily finger and handprints on the drywall may cause some difficulties for paint adhesion.

16.7 Special Considerations

Special framing, blocking, and fastening considerations for cabinets, shelves, and assorted trim work are described in the following sections. Attempts should be made to co-ordinate between the framers and the finish carpenters, tilers, drywall applicators, and cabinet installers, so that all mounting provisions and requirements for cabinetry and trim work is built into the frame. Cabinets and shelves are normally attached with screws. Adhesives and the collated pneumatic nailer are the preferred fastening systems for most trimwork.

16.7.1 Cabinets and Shelving

Cabinets and shelving may be attached directly to load bearing walls using one of the techniques listed below. The recommended fastener is a #8 2 in (50 mm) self-drilling screw.

- screw the cabinets and shelves to load bearing wall studs;
- screw the cabinets and shelves to steel or wood blocking placed between load bearing wall studs prior to drywall application;
- screw the cabinets and shelves to 0.018 in (0.46 mm) sheet steel or strapping that is secured to the load bearing wall studs prior to drywall application

Cabinets should not be attached to non-load bearing studs. To attach supports for closet shelving, use self-piercing fasteners for non-load bearing studs and self-drilling screws for load bearing studs.

16.7.2 Baseboard

Three different methods have been used for attaching baseboard to walls in the steel-framed house. Construction adhesives work well and provide an acceptable bond, but they require tacking to hold the trim until the glue cures. Specially hardened finishing nails in a pneumatic nailer can be used to attach baseboard, door and window trim to the walls. Finishing screws with small heads (about 1/8 in wide) are also available and will leave an acceptable finish. Putty or wood filler can be applied over nail and screw heads.

16.7.3 Chair Rail and Ceiling Molding

The size of chair rail and ceiling molding will determine the best attachment method. The carpenter can screw or nail the molding through the drywall directly to the studs or track. Another alternative is to attach the rail and molding to steel or wood blocking installed between the studs.

For large ceiling molding applications, use top track with deep flanges. The deeper flanges will extend farther down the wall to provide a backing for attachment.

16.7.4 Door and Window Trim

Trim around doors, windows, and openings can be nailed or screwed into the wood frame if it is present, or screwed into the steel jamb assembly.

16.7.5 Blocking for Towel Racks and Grab Bars

Steel or wood blocking can be used for the installation of towel racks and grab bars. It is important for this blocking to be identified early in the framing process. As often happens in custom-built homes, the homebuyers may change the location of racks and bars. The use of sheet steel or strapping secured to the wall studs will accommodate minor variations in rack and bar placement.

17. Thermal, Vapour And Air Barriers

Chapter Objective

The purpose of this chapter is to describe the requirements for the control of air, moisture, and heat when a structure is constructed with light gauge steel. The approach is to provide barriers or retarders against the flow of heat energy, air, and vapour using materials and techniques that are similar to wood framing.

A brief overview of the barrier types is followed by the requirements for installation of the barriers. Special emphasis is given to the need for a "thermal break" when using LSF materials to frame residential dwellings due to the high conductivity of steel.

Specific Learning Objectives

After completing the chapter the student should be able to:

Objective 17.1: Describe the purpose and principles of the following three barrier types employed in residential dwellings:
- Thermal barriers
- Vapour barriers
- Air barriers

Objective 17.2: Demonstrate an understanding of the need to interrupt the "thermal bridge" inherent in steel framed dwellings.

Objective 17.3: Define the R-value (RSI-value) of a building material.

Objective 17.4: State the reasons for controlling the movement of moisture between the inside and outside of the building envelope through the building walls, floors, and ceilings.

Objective 17.5: Demonstrate an understanding of the OBC minimum requirements for insulation based upon the building element.

Objective 17.6: Describe the OBC Section 9.25 25% rule for applying insulation on the cold side of the steel frame, and state how this is typically achieved using rigid insulating sheathing.

Objective 17.7: Define the term 'ghosting' and state the two causes to which it is attributed.

Objective 17.8: Demonstrate an awareness of the various types of insulating materials that can be used to provide thermal barriers in steel framed houses.

Objective 17.9: Describe the insulating details that are especially relevant to the framer, as they require attention during the layout and assembly of the steel frame.

Objective 17.10: Describe the various ways in which rigid insulating sheathing can be attached to the exterior walls of a steel framed house.

Objective 17.11: Describe the vapour and air barrier details that are especially relevant to the framer, as they require attention during the layout and assembly of the steel frame.

Suggested Activities

The recommended format for training is classroom discussion followed by hands-on construction of wall, floor and ceiling assemblies. It is recommended that the students are shown how exterior rigid insulating material is attached to the steel studs using at least two of the three available techniques described in this chapter. The students should be given the opportunity to construct and insulate a box lintel, perimeter joist assembly, king-jack stud assembly, or corner assembly. They should also be shown how to install vapour barrier where required to maintain its continuity between walls, floors and ceilings.

While it is not normally the job of a framer to install insulation, air and vapour barriers, the need to understand how these barriers act to complete the building envelope must be emphasized with the students. Time should be taken during the construction of floor, wall, and roof assemblies to point out where the barriers would be required, and where the framer must take responsibility for their installation.

Materials and Equipment

Material and equipment required for this chapter is summarized in the table below.

Item	Quantity
Friction Fitting Batt Insulation (16" x 48")	1 bag
Rigid Expanded Polystyrene Sheathing (24" x 48")	10 sheets
Screws with Plastic Washers	100
Polyethylene Vapour Barrier (10 mil, 4 mil)	1 roll
Gloves, Eye Protection, Cutting Knives (student provides own)	-

17. Thermal, Vapour And Air Barriers

17.1 Introduction

The preceding chapters in this manual have dealt with the design and assembly of the structural frame of residential buildings using cold-formed light gauge steel. The remainder of this curriculum will discuss the tasks necessary to complete the structure. Building services, insulation, air and vapour retarders, and exterior finishes will now be discussed.

Attention to detail, installation, and specifications are important for both a wood framed dwelling and a steel framed dwelling, when it comes to finishing off the residence both inside and outside. The use of light gauge steel in the frame has an impact on the way in which services are integrated into the structure. These next three chapters will help the framer and other tradespersons gain an appreciation of each trade's role and ensure the success and betterment of the whole project.

The purpose of this chapter is to describe the requirements for the control of air, moisture, and heat when a structure is constructed with light gauge steel. The approach is to provide barriers or retarders against the flow of heat energy, air, and vapour using materials and techniques that are similar to wood framing. A brief overview of the barrier types is followed by the requirements for installation of the barriers. Special emphasis is given to the need for a "thermal break" when using LSF materials to frame residential dwellings.

This chapter is divided into the following sections:

Section 17.2: General Information
Section 17.3: Barrier Types
Section 17.4: Building Code Requirements
Section 17.5: Insulating the Steel Framed House
Section 17.6: Air and Vapour Barriers

The student is referred back to previous chapters on fasteners, wall, floor and roof systems for details about the design and assembly of the building frame.

17.2 General Information

Experience has shown that energy bills for steel-framed houses are not higher than wood-framed houses of similar size, construction and occupancy. The thermal efficiency of a steel or wood frame home depends primarily on good construction detailing, the integrity of the various barrier systems, and the efficiency of the HVAC systems.

The *NBCC* and *OBC* address insulation requirements for cold climate conditions and prescribe solutions to address the level of thermal performance necessary to protect the health and safety of the occupants. Generally, these requirements were developed to deal with heat moving out of a building.

Similar considerations are applicable to address warm temperature climates. In hot climates, energy is needed to cool the building and therefore insulation is needed to prevent heat from entering a building.

This document will deal specifically with cold climate conditions.

17.3 Barrier Types

Three types of 'barriers' (more accurately termed 'retarders') are required for residential dwellings. These barriers are installed to resist the transfer of air, moisture and heat energy between the inside and outside of the structure. The sections of the OBC that are applicable here include:

- Section 5.3 Heat Transfer
- Section 5.4 Air Leakage
- Section 5.5 Vapour Diffusion

17.3.1 Thermal Barriers

Thermal barriers reduce heat transfer. Thermal insulation helps keep a building cooler in summer and warmer in winter by retarding the passage of heat through the exterior surfaces of the building. This is for both the comfort of the occupants and the cost of maintaining that comfort in the form of heating and cooling energy costs. A thermal barrier is also important because temperature gradients in the exterior walls, floors and ceilings can create conditions for condensation of water vapour traveling through the wall.

The ability of the building assembly to resist the conduction of heat is expressed in terms of thermal resistance. Resistance to heat flow is expressed as an "R" value (square foot-hour-degree Fahrenheit per Btu), and the metric equivalent "RSI" value (square metre-hour-degree Celsius per Watt). The higher the R-value, the higher the insulating value of the assembly.

Every component of a building assembly contributes in some way to its overall thermal resistance. The contribution depends on the amount and type of material. Metals have very low R-values, and concrete and masonry materials are only slightly better. Wood has a substantially higher thermal resistance, but not nearly as high as that of an equal thickness of any of the common insulating materials.

Most of the thermal resistance of any insulated building is attributable to the insulating material. Numerous materials are available for insulating residential dwellings. The most popular materials include glass fiber batts and loose fill, and polystyrene and polyethylene foam rigid boards.

The steel in a steel-framed dwelling is inherently a higher conductor of heat energy. This high conductivity can, if not managed correctly, provide a "thermal bridge" through the wall, floor, and ceiling cavity. Insulation attached to the cold side of the steel breaks the thermal bridge and significantly reduces thermal losses.

Installation guidelines for thermal barriers are described later in Section 17.5.

17.3.2 Vapour Barriers

Vapour barriers (or retarders) resist the movement of water in its gaseous state between the inside and outside of the building. To prevent condensation inside building assemblies, vapour barriers must be placed on the warmer side of the insulation layer. The part of the building assembly toward the cooler side of the vapor retarder should be allowed to "breathe".

Many of the normal living activities taking place in a house such as cooking, dishwashing, laundering and bathing create considerable amounts of moisture. This moisture is picked up and held as **water vapour** by the air inside the house.

The air both inside and outside the house always contains water vapour. The higher the temperature of the air, the more water vapour it can hold. At any given moment, the amount of water vapour the air actually contains, divided by the maximum amount it could contain, is the relative humidity. When the relative humidity reaches 100%, either through a drop in air temperature or an increase in water vapour, the air is said to have reached its **dew point**, and the water vapour will condense into a liquid.

Moisture will try to move between the inside and outside of the house for two reasons. During the winter months in particular, the humidity outside the building is usually much lower than inside. This is because the outside temperature is much lower than inside. This difference in humidity tends to draw moisture through the building envelope. A second mechanism of vapour transfer is air movement. When the interior air pressure is higher than the outside air pressure, air leaving the building carries moisture through the building envelope.

Moisture transference through the exterior walls of a home can have negative effects. If the temperature reaches the dew point within the wall, floor or ceiling cavity, condensation will form and dampen the insulating material, structural elements, and sheathing. This moisture will reduce the R-value of the entire assembly.

Moisture in a wall, floor or ceiling cavity will promote mold and fungus growth. This is not a concern for the steel material, but cellulose type material such as insulation, floor sheathing or paper backing on drywall will provide a habitat for fungi and mold. Moisture will eventually degrade the exterior and interior cladding materials if it is not controlled. It may also potentially accelerate corrosion of the steel frame[1].

Canadian winter conditions typically display an outdoor temperature of minus 20°C. A house will normally have an indoor temperature of +20°C

[1] Evidence so far suggests the potential for extensive corrosion of the galvanized steel is very low. However, it is still desirable to avoid trapped moisture.

and a relative humidity of 30-40%. If proper procedures are followed for the thermal and vapour barrier requirements, recent studies show that steel stud temperatures remain well above the dew point.

Installation guidelines for vapour retarders are described later in Section 17.6.

17.3.3 Air Barriers

An air barrier is intended to resist air leakage both from within the building to the outside and from the outside toward the interior. Much attention is given to reducing air infiltration between the inside and outside of a house because this leakage often accounts for the major portion of the cost to heat the building in winter and cool it in summer.

This trend in home heating and cooling requirements has led to higher standards of window and door construction, increased use of special vapour-permeable air barrier papers under the exterior siding, and greater care in sealing around electrical outlets and other penetrations of the exterior walls, floors, and ceilings.

Often the exterior insulating sheathing that is put on steel-framed buildings can be considered as an air barrier provided the joints are sealed with an approved tape.

A vapour barrier is a type of air barrier but has the additional task of resisting the passage of moisture as indicated by its permeability. The issue of using a single air/vapour barrier or separate air and vapour barriers is beyond the scope of this manual. Nevertheless, a separate air barrier may be used with LSF construction.

17.4 Building Code Requirements

The importance of thermal, moisture, and air barriers to the health and safety of building occupants is recognized by the building codes in Canada. Both the *NBCC* and *OBC* dictate provisions for heat and moisture transfer control for residential dwellings.

The *NBCC Section 9.25* deals with heat transfer, air leakage and condensation control for houses and other small buildings. This section requires that insulation be installed in walls, ceilings and floors that separate heated space from unheated space. This insulation is needed to avoid condensation on interior surfaces, to provide comfort to the occupants, and minimize the costs of heating. Local building authorities generally accept thermal and moisture barrier practices stated in *NBCC* and *OBC Part 9* for steel-framed houses.

17.4.1 OBC Section 9.25 Minimum Insulation Requirements

As an example of how steel framed homes are built to satisfy thermal design provisions, the balance of this section will refer to the *OBC 1997*. The *OBC Section 9.25* specifies the minimum insulation requirements based on Degree Day Zones. This is seen in *OBC Table 9.25.2.1* which is reproduced below as Table 17.1.

Table 17.1: OBC Part 9 Minimum Insulation Requirements

Building Element Exposed to the Exterior or to Unheated Space	RSI (R) Value Required		
	Zone 1 <5000 Degree Days	Zone 2 >5000 Degree Days	Zone 1 & 2 Electric Space Heating
Ceiling below attic or roof space	5.40 (R31)	6.70 (R38)	7.00 (R40)
Roof assembly without attic or roof space	3.52 (R20)	3.52 (R20)	3.87 (R22)
Wall other than foundation wall	3.00 (R17)	3.87 (R22)	4.70 (R27)
Foundation walls enclosing heated space	1.41 (R8)	2.11 (R12)	3.25 (R19)
Floor, other than slab-on-ground	4.40 (R25)	4.40 (R25)	4.40 (R25)
Slab-on-ground containing pipes or heating ducts	1.76 (R10)	1.76 (R10)	1.76 (R10)
Slab-on-ground not containing pipes or heating ducts	1.41 (R8)	1.41 (R8)	1.41 (R8)

17.4.2 The 25% Rule

It is recommended that 25% of the insulation value given in Table 17.1, be placed on the exterior of the steel frame in the form of rigid insulation. This will act as an effective **thermal break**. The use of rigid insulation on the outside of the structural frame is a common practice in wood framing.

For example, the insulation required for Zone 1 in walls other than foundation walls, must have a minimum RSI = 3.00 (R17). A rigid exterior insulating sheathing with a minimum RSI of (0.25 x 3.00) = 0.75 (R4) is required. Typically, extruded or expanded polystyrene is used as the insulating sheathing for these steel framed walls.

17.4.3 OBC Section 9.38 Minimum Insulation Requirements

As an alternative to *Section 9.25*, the *OBC* provides an additional section on thermal design. *OBC Section 9.38* deals with the thermal design of the assembly for all construction, whether it be wood framing, steel framing, structural insulated panels, or other building envelopes. This approach requires the services of a design professional.

OBC Section 9.38 stipulates a minimum thermal resistance for the entire building assembly. This approach recognizes the contributions of the other building materials to thermal resistance. Table 17.2 illustrates the minimum insulation requirements according to *OBC Section 9.38*.

Table 17.2: OBC Section 9.38 Minimum Insulation Requirements

Building Assembly	RSI (R) Value Required		
	Zone 1 < 5000 Degree Days	Zone 2 >5000 Degree Days	Zones 1 & 2 Electric Space Heating
Ceiling below attic or roof space	5.6 (R32)	6.9 (R39)	7.20 (R41)
Roof assembly without attic or roof space	3.8 (R22)	3.8 (R22)	4.15 (R24)
Wall other than foundation wall	3.45 (R19)	4.3 (R24)	5.1.5 (R29)
Foundation walls enclosing heated space	1.7 (R10)	2.4 (R14)	3.54 (R20)
Floor other than slab-on-ground	4.7 (R27)	4.7 (R27)	4.7 (R27)
Slab-on-ground containing pipes or heating ducts	2.11 (R12)	2.11 (R12)	2.11 (R12)
Slab-on-ground not containing pipes or heating ducts	1.76 (R10)	1.76 (R10)	1.76 (R10)

OBC Section 9.38 requires that special attention be paid to steel studs and joists where they act as thermal bridges. This is the case with exterior walls, ceilings and non-accessible attics, and floors over non-heated crawl spaces. Special provisions are in place to address thermal bridging by the LSF members. The builder can choose one of two options listed below.

Option #1 OBC Section 9.38.2
Increase the RSI value of the assembly by 20%. For example, the ceiling assembly below an unheated attic or roof space for a house located in a Climatic Zone with more than 5000 Degree Days requires RSI 6.9 (R39) according to Table I7.2. The RSI value of the assembly would have to be increased to (6.9 x 1.20) = 8.3.

Option #2 OBC Section 9.38.3
Restrict heat flow through the thermal bridge by applying insulation directly to the cold side. This thermal bridge break must have 25% of the thermal resistance required for the assembly. For example, a wall assembly in a home constructed in a Climatic Zone with less than 5000 Degree Days requires an RSI value of 3.45 (R19). Rigid foam insulation with an RSI of at least (0.25 x 3.45) = 0.86 should be applied to the cold side of the steel frame. The balance of the assembly materials (i.e. sheathing, studs, cavity insulation, barriers, drywall, etc) contribute thermal resistance to achieve a total RSI = 3.45. This option is consistent with current recommended insulating practices for steel framed homes built in Canada.

17.4.4 Ghosting

Recent studies suggest that the 25% rule prevents significant thermal bridging and **ghosting**. Ghosting is the deposition of smoke, dirt and dust particles on the interior surfaces of the walls at stud locations. Ghosting is attributed to two causes:

- Electrostatic potential differences between the particles and the wall surface, especially where a drywall screw is connected to a metal wall stud;
- A surface temperature gradient greater than 3°C, which might occur between a wall stud and the cavity between studs.

Particle deposition is most often attributed to electrostatic potential difference. If ghosting is observed on the inside surfaces of both interior and exterior walls, this is confirmation that electrostatic potential difference is the primary source of the problem. The installation of precipitators in the central HVAC system will clean the air of most of the particles.

Since ghosting is also a function of temperature differences, it can happen in any building assembly that is not properly insulated. For steel framed homes, the application of exterior rigid insulation keeps the difference between stud temperature and cavity temperature below the critical difference for ghosting on the interior wall surfaces.

17.5 Insulating the Steel Framed House

OBC Section 9.38 stipulates that thermal insulation, vapour and air barriers must conform to the requirements pertaining to wood framed construction. In other words, materials and installation are virtually the same regardless of framing material.

17.5.1 Insulating Materials

The builder is free to select insulating materials similarly used with other framing. For example, friction fitting fiberglass,spun wool batts, or blown polyicynene can be used for cavity insulation. Rigid insulating sheathing such as extruded or expanded polystyrene boards can be attached to the exterior side of the framing to satisfy the 25% rule.

Table 17.3 shows various types of insulation materials that are suitable for residential steel framing. The table includes mineral wool insulation and various types of exterior insulating sheathings.

Table 17.3: Insulation Materials for Residential Steel Framing

Manufacturer[1]	Type	R-Value	Thickness (inches)	Width (inches)	Length (inches)	Face
CertainTeed	Batt	R-19	6-1/4	16 & 24	48 & 96	Unfaced
CertainTeed	Batt	R-19	6-1/4	16 & 24	48 & 96	Kraft or Foil
CertainTeed	Batt	R-13	3-1/2	16 & 24	96	Unfaced or Kraft
Icynene	Spray-foam	R 3.6 per inch	Applied to fit	Applied to fit	Applied to fit	Unfaced
Knauf Fiber Glass	Batt	R-19	6-1/4	16 & 24	96	Unfaced, Kraft or Foil
Knauf Fiber Glass	Batt	R-15	3-1/2	16 & 24	96	Unfaced, Kraft or Foil
Knauf Fiber Glass	Batt	R-13	3-1/2	16 & 24	96	Unfaced, Kraft or Foil
Owens Corning	Batt	R-22	6-3/4	16 & 24	48 & 96	Unfaced, Kraft or Foil
Owens Corning	Batt	R-19	6-1/4	16 & 24	48 & 96	Unfaced, Kraft or Foil
Owens Corning	Batt	R-13	3-1/2	16 & 24	48 & 96	Unfaced, Kraft or Foil
Celfort	XPS[2]	R-5 per inch	1, 1.5, 2 (nominal)	24	48 & 96	Unfaced
Dow	XPS[2]	R-5 per inch	1, 1.5, 2 (nominal)	24	48 & 96	Unfaced

[1] – With the exception of Knauf, all manufacturers' products are listed in the CCMC Registry of Product Evaluations.
[2] – Expanded Polystyrene

17.5.2 Cavity Insulation

Cavity insulation refers to insulation placed between the framing members. In an exterior wall, the cavity is between the wall studs and the interior and exterior sheathing. In a ceiling, the cavity is between the ceiling joists and above the ceiling finish. In a floor assembly, the cavity is between the floor joists and under the sub-flooring.

The most poplar insulation material for cavities is friction-fitting batt insulation made from glass, mineral and other spun fibre. Since the steel framing member is usually a C-section and open on one side, the cavity between framing members is larger than a wood framed cavity. If LSF wall studs and floor joists are installed 16 in (405 mm) o/c the cavity is actually 16 inches wide. Therefore, the insulating batt must be wider than those used with wood. Larger width batts are manufactured and marked specifically for this purpose, as shown in Figure 17.1. Table 17.3 listed batt insulation having both 16 in (405 mm) and 24 in (610 mm) widths.

FIGURE 17.1 BATT INSULATION

Spray-applied or blown insulation may also be used to fill cavities. The material is mixed with a binder to provide quick solidification. This allows it to completely fill the cavity and prevents it from settling over time. The blown product adheres quickly on contact. It is applied directly into the open cavities formed by the framing members and exterior sheathing. Excess material is trimmed away before application of the interior drywall or sheathing.

17.5.3 Rigid Insulating Sheathing

Rigid insulating sheathing such as extruded or expanded polystyrene boards can be attached to the exterior side of the building frame to satisfy

the 25% rule. Two manufacturers of expanded polystyrene insulating sheathing were provided in Table 17.3.

Attachment methods and fasteners for rigid insulating sheathing were described in Chapter 8 Section 8.6. The options include: fastening the insulation directly to the steel frame with self-drilling screws and plastic washers; fastening the insulation to the exterior wood sheathing with wood screws and plastic washers; and pressing the insulation over pins welded to the steel frame, and holding it in placed with hold-down clips.

Figure 17.2 illustrates the screw-washer approach to attach exterior insulating sheathing. The screw must be long enough to penetrate the insulation and underlying stud or sheathing. The plastic washer prevents the screw head from penetrating and crushing the foam insulation.

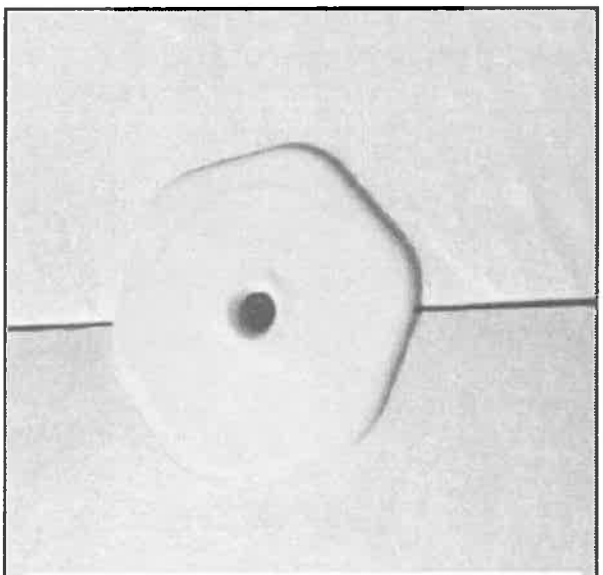

FIGURE 17.2 SCREW AND WASHER METHOD FOR FASTENING RIGID EXTERIOR INSULATION

Figures 17.3A and 17.3B show the pin connector method. The pins are specifically manufactured for the application and are tack welded to the stud flanges. The rigid insulation is pressed over the pins and held in place by hold-down clips. This method of attaching exterior insulating sheathing is particularly suited to a panelized operation where welding can be performed in a controlled environment.

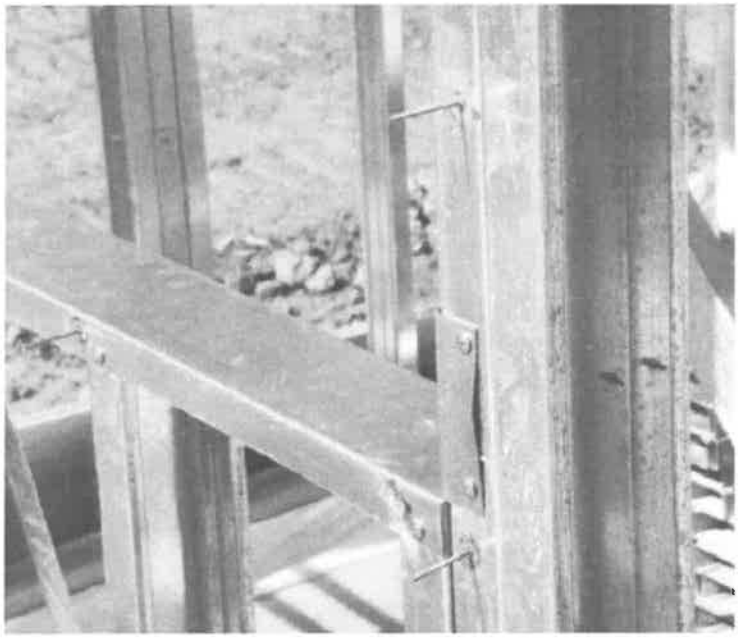

FIGURE 17.3A PIN CONNECTORS FOR EXTERIOR RIGID INSULATING SHEATHING

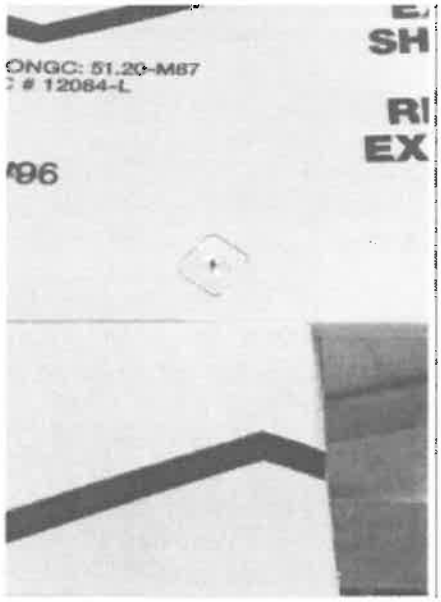

FIGURE 17.3B PIN CONNECTOR CLIP

17.5.4 Installation Details for Insulation

The following sections provide further guidance to the framer and tradespersons tasked with assembling the steel frame of the dwelling and making sure that it is insulated properly. The discussion is broken down into the various building components where insulation is normally required.

17.5.4.1 Exterior Walls

The thermal resistance required for walls other than foundation walls was provided in Table 17.1 and 17.2. Friction-fit batts are most commonly used to insulate exterior wall cavities. The batts are placed between the studs and run full height of the wall. Many areas of the wall frame will have non-standard spacing of the framing members and batts will need to be cut-to-fit. Ensure that the batt is wide enough to insulate inside the C-section of the wall studs.

Closed assemblies such as jambs, box lintels, corner studs and king-jack assemblies may have restricted or non-accessible voids. The framer must be careful to fill them before the final assembly of the wall. It is necessary to have some insulation on site during the assembly of the steel frame.

Spaces behind electrical boxes must be filled. Hand-cut batt insulation or sprayed polyurethane foam may be used for these details. Sprayed foam may also be used to seal gaps between window and door inserts and the steel frame.

A rigid insulating sheathing applied to the exterior of steel frames is dictated by the 25% rule as described in previous sections of this chapter. This is usually extruded polystyrene or expanded polystyrene.

17.5.4.2 Floor Over Heated Basement

The outside perimeter of the floor assembly should be insulated to reduce thermal bridging and provide the necessary thermal resistance for the assembly.

The outside face of the rim joist should be clad with rigid polystyrene board of identical thickness as the exterior insulating sheathing. The rigid insulation, where it is exposed, should be clad with cement board, cement parging on wire lathe, or another hard finish to protect it from weather and physical damage (*OBC Section 9.25.2.4.7*).

Batt insulation should be used to insulate the voids inside any perimeter joist assembly, and to insulate small spaces between rim joists and parallel floor joists. Batt insulation should be placed between floor joists at the rim joist, and extend back from the rim joist toward the heated space sufficient to provide the required R-value.

17.5.4.3 Floor Over an Unheated Space

The thermal resistance required for a floor over an unheated space was provided in Table 17.1 and 17.2. Examples include an unheated garage, a exterior cantilever floor overhang and a crawl space vented to the outside.

Friction fitting batts placed to a full depth of 10 in (254 mm) between the floor joists will satisfy the *OBC Section 9.38* 20% rule. For difficult access, the insulating batts should be secured with ties or wire mesh to ensure they remain in place.

Where the floor underside is accessible, and when the OBC Section 9.25 25% rule is used, rigid polystyrene board can be attached to the cold side of the floor joists. Cement board or other hard finish should be applied over the polystyrene to protect it from damage.

Consult with the local building authority for acceptance of either of these two methods.

17.5.4.4 Ceiling Under Attic or Roof Space

The thermal resistance required for a ceiling under an attic or roof space was provided in Table 17.1 and 17.2. Place friction fitting batts or blown loose fill insulation between the joists. The ceiling drywall and finish will ensure the insulation remains in place.

Sufficient insulation material to achieve the *OBC Section 9.38* 20% rule can be easily applied over the ceilings in the attic/roof space. The insulation must cover the tops of the ceiling joists to minimize thermal bridging.

Standard procedures for air circulation and venting within the attic or roof space must be adhered to.

17.5.4.5 Cathedral-Type Roof and Ceiling

The thermal resistance required for roof assemblies without attic or roof space was provided in Table 17.1 and 17.2. Attention must be paid to cathedral roofs to ensure they are properly vented.

A ventilation space must be provided between the insulation and the roof sheathing. Figure 17.4 shows an assembly with cross purlins over the roof rafters. Minimum clearances of 1 in (25 mm) between the insulation and joist top plane, and 3.25 in (83 mm) between insulation and roof sheathing are required by both the *NBCC* and *OBC Section 9.19*.

Eve and roof vents complete a well-vented cathedral roof. Friction fitting batts should be used rather than blown loose fill insulation to ensure continuity of the 1 in (25 mm) clearance. Eight inch (203 mm) batts placed

between 10 in (254 mm) rafters will achieve the *OBC Section 9.38* 20% rule.

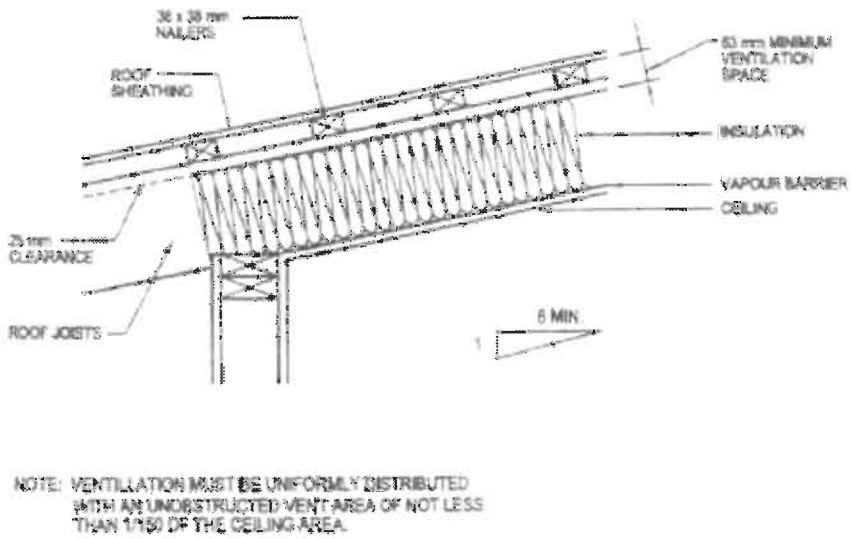

FIGURE 17.4 CROSS PURLINS OVER THE ROOF RAFTERS (FROM O.B.C. ILLUSTRATED GUIDE TO THE ONTARIO BUILDING CODE 1997)

17.6 Air and Vapour Barriers

To prevent condensation inside building assemblies, a vapour retarder is installed on the warmer side of the insulation layer. This is a continuous sheet, as nearly seamless as possible, of plastic sheeting or other material that is highly resistant to the passage of water vapour.

The effect of the vapour retarder is to reduce the flow of air and vapour through the building assembly, preventing the moisture from reaching the point in the assembly where it would condense. For buildings in most parts of Canada, the vapour retarder should be placed on the inside of the insulation, or in other words, on the warm side of the wall assembly.

The part of the building assembly towards the cooler side of the vapour retarder should be allowed to "breathe", to ventilate freely by means of attic ventilation, topside roof vents, or vapor-permeable exterior materials. This helps prevent moisture from becoming trapped between the vapour retarder and another impermeable material.

The performance of a vapour retarder is measured in **perms**. A perm (Imperial Units) is defined as the passage of one grain of water vapour per hour through one square foot of material at a pressure differential of one inch of mercury between the two sides of the material. The metric equivalent is defined as the passage of one nanogram of water vapour per second per square meter per pascal of pressure difference.

Table 17.4 shows the perm ratings for some of the more common building materials.

Table 17.4: Perm Ratings for Building Materials

Building Material	Imperial Perms	Metric Perms
Aluminum Foil 1 mil (0.025 mm)	0.0	0.0
Built-up Roofing	0.0	0.0
Polyethylene Sheeting 10 mil (0.25 mm) 4 mil (0.10 mm) 2 mil (0.05 mm)	0.03 0.08 0.16	0.0005 0.0014 0.0028
PVC, plasticized 4 mil (0.10 mm)	0.8 – 1.4	0.014 – 0.024
Interior primer plus one coat flat oil paint on plaster	1.6 – 3.0	0.028 – 0.052
Exterior oil paint – three coats on wood	0.3 – 1.0	0.005 – 0.017
Brick Masonry 4 in (100 mm) thick	0.8	0.014
Plaster on metal lathe 3/4 in (19 mm) thick	15	0.26
Gypsum Wallboard 3/8 in (9.5 mm) thick	50	0.87
Plywood, exterior grade 1/4 in (6 mm) thick	0.7	0.012

Source: Fundamentals of Building Construction: Materials and Methods, Edward Allen, John Wiley & Sons Ltd., (1990)

The materials and application of the vapour barrier must follow the requirements of *NBCC Part 9*. Polyethylene sheeting that is used as a vapour barrier must conform to CAN/CGSB Standard 51.34 M entitled "*Vapour Barrier, Polyethylene Sheet for Use in Building Construction*". Vapour barriers that are membrane-type must conform to CAN/CGSB Standard 51.33 M entitled "*Vapour Barrier Sheet, Excluding Polyethylene, for Use in Building Construction*".

Vapour barriers must be installed to protect all thermally insulated wall, floor, and ceiling assemblies. Sheet-type vapour barriers can be fixed to the steel studs with adhesive or double-sided tape to hold it in place until the drywall is attached. Screw fastening is not recommended since it punctures and jeopardizes the integrity of the barrier.

Where sheet-type vapour barriers are used as an air barrier system, continuity of the system must be provided. The sheets should be lapped and sealed.

When exterior rigid insulating sheathing is used, the barrier permanence must not be greater than 15 ng/Pa.s.m^2 as required in the *NBCC Section 9.25.4.2(2)*.

18. EXTERIOR FINISHES

Chapter Objective

The purpose of this chapter is to learn about exterior finishes and how they are attached to the steel framed house. Although the final appearance of the house will be similar to that of a wood framed dwelling, the methods of attaching the exterior finishes are sometimes specific to steel framed homes.

A brief discussion surrounding cladding and exterior finishes is presented, and followed by the details of the fasteners and fastening techniques. These exterior finishes include metal and vinyl siding, wood and wood products, masonry, stucco and other cement products.

The application of exterior structural sheathing and rigid foam insulation has already been discussed in previous sections of this manual. Some of this information is repeated because of the important role that these materials play in determining the fastening systems for exterior finishes.

Specific Learning Objectives

After completing this chapter, the student should be able to:

Objective 18.1: Describe the various functions that an exterior finish must provide in completing a residential dwelling.

Objective 18.2: List and describe the exterior finishes that are commonly used in residential construction including the following:

- Structural sheathing
- Rigid insulating sheathing
- Metal and vinyl siding
- Wood and wood products
- Stucco and cement products
- Masonry and stone

Objective 18.3: Demonstrate an understanding of the importance of following the manufacturer's specifications for installation and fasteners of exterior finishes

Objective 18.4: Demonstrate an awareness of the other important considerations for fastening systems and installation procedures for exterior finishes.

Objective 18.5: State the various techniques and fasteners recommended for fastening a variety of exterior finishes to the steel framed home, including the following finishes:

- Structural sheathing
- Rigid insulating sheathing
- Metal and vinyl siding
- Wood boards, panels, and plywood
- Stucco, synthetic stucco, and fibre cement board
- Masonry and stone

Objective 18.6: Demonstrate the ability to attach structural sheathing and exterior insulating sheathing to a steel framed house in a manner conforming to the industry standards.

Suggested Activities

The recommended format for this module is classroom presentation, followed by the installation of structural sheathing and exterior insulating sheathing during the small project being constructed as part of other chapters in this cirriculum.

Many different sidings may be used on a steel framed house. The predominant siding material used in a particular region should be focused on during the course. It may be a good idea to use a video or slides to show the different types and styles of exterior finishes. Specific items that can be addressed include, but are not necessarily limited to, the following:

- Different types of exterior finishes and the manufacturers' recommendations for wall stud spacing and fastening systems.
- The impact that structural and rigid foam sheathing has on decisions surrounding the fastening systems for exterior finishes.
- Using the siding material or materials that are predominant in the training area, describe and demonstrate how the material is attached to the steel frame.
- Ensure that the students are aware of how structural sheathing and exterior insulating sheathing is attached to a steel framed home.

It would be beneficial for the students to be able to see the different types of exterior finishes. Samples of vinyl siding, wood boards, cedar shingles, stucco or synthetic stucco mock-ups will help the students understand the materials and how they are attached to the house.

18. EXTERIOR FINISHES

18.1 Introduction

Steel framed homes are visually indistinguishable from wood framed homes upon completion. This is because the exterior finishes or cladding that can be applied to a steel frame are essentially the same as those for a wood frame. These exterior finishes include metal and vinyl siding, wood and wood products, masonry, stucco and other cement products.

The purpose of this chapter is to learn about the exterior finishes and how they are attached to the steel framed house. Although the final appearance of the house will be similar to that of a wood framed dwelling, the methods of attaching the exterior finishes are specific to steel framed homes. A brief discussion surrounding cladding and exterior finishes is presented, and followed by the details of the fasteners and fastening techniques.

The application of exterior structural sheathing and rigid foam insulation has already been discussed in previous sections of this manual. Some of this information is repeated because of the important role that these materials play in determining the fastening systems for exterior finishes.

This chapter is divided into the following sections:

Section 18.2: Exterior Finishes
Section 18.3: Fastening Details

The student is referred to the following sections in this manual which have some bearing on the selection and installation of exterior finishes:

Chapter 8: Fasteners
Chapter 10: Floor Systems
Chapter 11: Load Bearing Walls
Chapter 17: Thermal, Air, and Vapour Barriers

18.2 Exterior Finishes

The exterior finish or cladding of the steel framed home is a multi-purpose element of the structure. The major purpose of this cladding is to separate the indoor environment of the house from the outdoor environment. The cladding must prevent the entry of rain, snow, and ice into the dwelling. The cladding must prevent the unintended passage of air and water vapour between indoors and outdoors. The cladding must control the passage of sunlight into the building. The exterior finishes serve to partially isolate the interior of the building from noises outside. The exterior of the house must resist the forces of wind, thermal expansion and contraction, and other structural movements. It must do all these things and maintain the visual quality of the dwelling.

18.2.1 Types of Exterior Finishes

Exterior finishes that are currently being used for wood framed houses can be applied to steel framed homes. These finishes offer a variety of textures, colours, and durability. Each will have some advantages and disadvantages over other exterior finishes, and homeowner preference and ongoing maintenance needs are major criteria for their selection. All exterior cladding must conform to requirements set out in the *NBCC* and *OBC Section 9*.

The following are exterior finishes that will be discussed in this chapter:

- structural sheathing
- rigid insulating sheathing
- metal and vinyl siding
- wood and wood products
- stucco and cement products
- masonry and stone

18.2.2 Structural Sheathing

Structural sheathing applied to the outside of the steel stud wall is an acceptable alternative to horizontal and diagonal bracing. Structural sheathing is normally oriented strand board (OSB) or plywood with a thickness of ¼" (6 mm) to ½" (13 mm). In addition to bracing the load bearing stud walls, the sheathing also provides a material to which rigid foam insulation and cladding can be attached using conventional methods. It can serve as an air barrier if the joints are sealed with an approved tape or sealant. It also forms the back of the wall cavity for insulation.

18.2.3 Rigid Insulating Sheathing

Rigid exterior insulating sheathing is used in steel framed homes to provide a thermal break between the exterior cooler air and the wall studs and exposed floor systems. The 25% rule was explained in *Chapter 17 Section 17.4.2*. Expanded polystyrene is the most common rigid foam insulation used and

comes in a variety of widths and lengths (see *Section 17.5 Table 17.3*). It can be applied directly to the steel studs or to OSB and plywood structural sheathing. When rigid foam insulation is applied directly to the steel studs it does not replace the requirement for horizontal or diagonal bracing. It can serve as an air barrier if the joints are sealed with an approved tape. It also forms the back of the wall cavity for insulation.

18.2.4 Metal and Vinyl Siding

Siding formed from pre-finished sheet aluminum, steel, or vinyl is usually designed to imitate wood siding. These materials are not subject to decay like wood and are generally guaranteed against the need for refinishing and painting for long periods of time (10 - 20 years). Such sidings do have their own particular problems such as ease of denting (aluminum), fragility in extreme cold (vinyl), and corrosion (steel) if scratched or creased.

18.2.5 Wood and Wood Products

Wood siding includes wood boards, plywood, shingles, and manufactured wood panels that can be applied in a variety of orientations and patterns. Board sidings can be made from solid wood or from wood composites (hardboard). They can be applied in either a horizontal or vertical orientation using a variety of overlapping and joining techniques.

Plywood and panel-type siding materials are popular for their economy. The cost of the material per unit of wall is somewhat less than for other siding materials, and labour costs tend to be relatively low because the large sheets of plywood are more quickly installed than equivalent areas of boards, shingles and shakes. Plywood sidings are normally painted or stained to withstand the effects of weathering and moisture penetration.

Wood shingles and shakes require a nail-based sheathing material for installation. Most shingles are cut from cedar or redwood heartwood and need not be coated with paint or stain except for cosmetic reasons.

18.2.6 Stucco and Cement Products

Stucco is a portland cement plaster that is strong, durable, economical, and fire resistant. Stucco is applied over a galvanized lathe to provide it with a surface to bind to. The lathe is attached to the exterior wall with nails or screws, and is dimpled to hold the stucco away from the wall a fraction of an inch.

A synthetic stucco finish is also available for steel framed homes. This Exterior Insulation Finish System (EIFS) is widely used in commercial applications and can be applied directly to the steel framing members. Typical brand names include "Dryvit" and "STO". The system combines a rigid insulating sheathing with several layers of a synthetic stucco finish applied directly to the insulation.

Other cement-based materials such as fibre cement panels are becoming increasingly popular as the technology and fastening systems advance. Typical brand names include “Duracrete” and “Durock”.

18.2.7 Masonry and Stone

Residential steel framed dwellings can be faced with a single wythe of brick or stone. Corrugated metal ties attached to the wall and embedded in the mortar between the bricks, support the exterior finish and prevent it from falling into or out from the load bearing wall. Careful detail is needed to manage any moisture that finds its way into the wall cavity.

18.3 Fastening Details

18.3.1 General Considerations

The application of exterior finishes to steel framed houses follows the same procedures as for wood frame buildings. All exterior cladding must conform to the requirements of the *NBCC* and *OBC Part 9*.

Screws are typically used to attach cladding materials to the studs and must be long enough to extend through the exterior insulation and screw securely into the stud. If structural sheathing is used over the steel studs, the exterior cladding can be fastened to it. Wood strapping can also be applied vertically over the insulating sheathing in line with the studs. The cladding can then be nailed to the strapping.

Regardless of the exterior finish and fastener, the manufacturer's specifications and recommendations for fastening systems and installation procedures will take precedence. In addition to this, the individual installing the exterior finishes must consider the following:

- type of exterior finish
- type of fastener (nail, pin, screw)
- thickness of all layers the fastener must penetrate (including the stud, insulation, finish, etc.)
- structural sheathing covering the frame.
- rigid insulating sheathing covering the framing.
- spacing of wall studs
- requirements for air and water penetration barriers

The use of plywood or OSB sheathing greatly simplifies the attachment of several of the siding materials. The plywood or OSB provides a wood backing for nailing the siding.

Important details for each of the previously discussed exterior finishes will now be discussed.

18.3.2 Structural Sheathing

Structural sheathing such as OSB and plywood can be attached to the steel studs using screws that drill through both sheathing and steel, or pneumatic pins. The size and type of screw will depend on the thickness of the sheathing and steel. The most commonly used sheathing screw is the #8 self-drilling screw.

When sheathing thickness is 1/2 in (13 mm) or less and the steel thickness is 0.033 in (0.84 mm) or less, the #8 self-piercing screw is recommended.

For thicker steel and sheathing, use #8 self-drilling screws with pilot points (long drill point with no threads). This screw will penetrate the steel without the sheathing climbing the threads. After the pilot point penetrates the steel, the threads engage and pull the sheathing tight against the steel.

Winged (fluted) screws may also be used to attach sheathing to steel. The wings clear the wood away from the threads, preventing jacking of the sheathing. Once the wings contact the steel, they break off and the screw penetrates the steel.

A #10 laminator-type drywall screw may also be used for steel thickness of 0.043 in (1.10 mm) or less. This screw was not originally designed to attach plywood to steel, however many framers now use this screw to attach plywood and OSB to the steel frame. Laminator-type drywall screws are available in plated form. Screw diameter should be selected based on the thickness of the steel (see Chapter 8 Table 8.1).

When attaching sheathing to the steel frame, the framer must make sure that the sheathing is held tightly against the steel while screwing. This can be achieved by clamping the sheathing to the studs or having another member of the crew press the sheathing against the studs until several screws have been inserted. Ensure the screw head is seated flush with the sheathing. Flat, bugle, or wafer heads are designed to leave the screw head flush with the surface of the sheathing. Use a depth-sensitive nose-piece on the screwgun to prevent over-drilling through the sheathing layers. Over-drilling will reduce the effectiveness of the connection and void any warranty on the sheathing.

18.3.3 Rigid Insulating Sheathing

Rigid insulating sheathing such as extruded or expanded polystyrene boards can be attached to the exterior side of the building frame to satisfy the rule requiring 25% of the total thermal resistance be placed on the outside of the steel studs to act as a thermal break. Attachment procedures for this material have been previously described in Chapter 8 Section 8.6 and Chapter 17 Section 17.5.

Three options are available to the framer for attaching the rigid insulating sheathing:

- fasten the insulation directly to the steel frame with #8 self-drilling screws and plastic washers;
- fasten the insulation to the exterior structural sheathing with wood screws (or nails) and plastic washers;
- fasten the insulation to the steel frame using a pin and hold-down clip method.

When screws and plastic washers are used, the screw must be long enough to penetrate the insulation and underlying stud or sheathing. The plastic washer prevents the screw head from penetrating and crushing the foam insulation.

If the pin and clip method is used, pins must be tack-welded to the stud flanges. The insulation is pressed down over the pins and held in place with hold-down clips. This method of attaching exterior insulating sheathing is particularly suited to a panelized operation where welding can be performed in a controlled environment.

If the rigid insulation is intended to act as an air barrier the joints may need to be sealed with an approved tape or sealant.

18.3.4 Metal and Vinyl Siding

The fastener chosen for metal and vinyl siding will depend on the manufacturer's specifications and also on the presence or absence of exterior structural sheathing. Roofing nails, screws, or staples may be used to attach the siding directly to the sheathing. Siding that must be attached to the steel studs will require self-drilling screws.

Check with the siding manufacturer to verify the number of fasteners, their spacing, and whether they should attach to the structural sheathing or steel studs.

When siding is applied over rigid insulating sheathing and structural sheathing, longer fasteners will be needed. If the insulation is not acting as an air barrier, the installer will have to place a waterproof paper or felt layer on top of the insulation to act as an air barrier and backup waterproof layer.

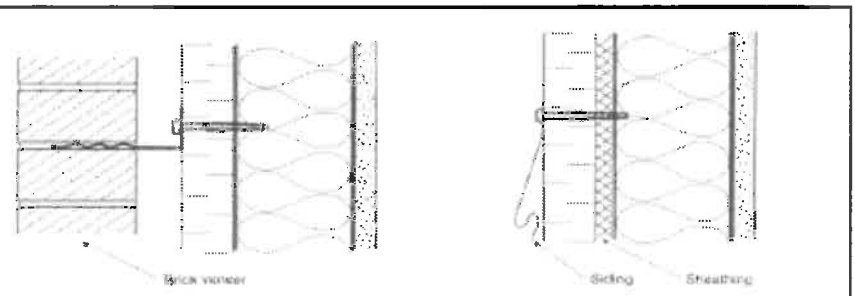

FIGURE 18.1 FASTENING EXTERIOR CLADDING

18.3.5 Wood and Wood Products

Wood siding includes wood boards, plywood, shingles, and manufactured wood panels. The fastener chosen for wood siding will depend on the manufacturer's specifications and also on the presence or absence of exterior structural sheathing. Always check with the siding manufacturer to verify the number of fasteners, their spacing, and whether they should attach to the structural sheathing or steel studs.

Solid wood boards or hardboard can be fastened to the structural sheathing (if present) using corrosion resistant nails or screws. If nails are used they must be long enough to penetrate the siding, insulation, and sheathing. If screws are used, they must penetrate the siding, insulation, sheathing (if present), and the steel stud leaving at least three threads exposed on the inside.

Plywood and panel-type sidings can be attached in a similar fashion. Particular attention must be paid to the joints in the plywood and panels. An aluminum Z-flashing exists to 'seal' the joints between plywood sections. Panel connections are normally designed and specified by the manufacturer. Corrosion resistant nails and screws of sufficient length must be used.

Wood shingles and shakes must be installed over some kind of nail-based sheathing. Follow the manufacturer's recommendations for installation and fastening.

18.3.6 Stucco and Cement Products

Stucco finishes can be created with a traditional portland cement plaster applied over a galvanized metal lath, or a synthetic stucco (EIFS) can be used. If traditional stucco is being applied, the lath can be attached to either the structural sheathing or the rigid insulation. A variety of fastening techniques can be used. The lath can be attached through the insulation and sheathing, into the steel frame using #8 self-drilling screws and plastic washers. If the rigid insulation was installed using pins and hold-down clips, the lath can be attached using the hold-down clips. Lath with a fine wire spacing can also be held in place with low-profile screw heads.

Exterior Insulation Finishing Systems (EIFS) is a relatively new product that uses rigid foam insulation with a synthetic stucco finish. The insulation is attached to the steel frame or sheathing in the usual manner, and the stucco finish is applied typically in two or three coats. Waterproofing is very important with this type of exterior finish. Careful attention to window and door openings is critical. Follow the manufacturer's specifications and installation instructions.

Fibre-Cement panels such as "Duracrete" can be attached in a similar manner as wood panels. Self-drilling screws should be used to fasten the

panels to the side of the house. If an air gap is desired between the panel and rigid insulation, wood strips or Z channel can be attached to the steel studs or sheathing prior to installing the panels. A corrosion resistant ribbed screw is recommended for this type of finish, to allow the screw to nest itself flush with the siding, and not destroy the finished surface. Again it is important to check the manufacturer's recommendations for installation.

18.3.7 Masonry and Stone Products

Steel framed homes can be faced with brick or stone in the same manner as wood framed homes. Corrugated metal ties are required as per the *NBCC* and *OBC*. These ties are screwed or nailed to the studs or sheathing respectively at 16 in (405 mm) o/c and are embedded into the mortar between bricks. The ties maintain the air space between insulation and brick, and hold the brick from falling away from the side of the house. An example of a tie is shown in Figures 18.2.

Careful attention to detail is needed to manage any moisture that finds its way into the air space behind the brick. Waterproofing and weep holes are required as in wood framed dwellings. Steel angles or concrete lintels should be used to support the brickwork over openings. Always follow the architect or design professional's instructions and specifications.

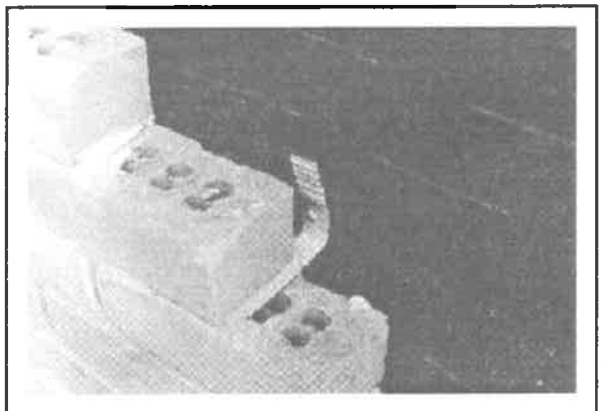

FIGURE 18.2 MASONRY FINISHES

19. Utilities – The Other Trades

Chapter Objective

The purpose of this chapter is to provide guidelines to the tradespersons who install the electrical, HVAC, and plumbing services in steel framed dwellings. Advice on how to run wire, ducts, pipe and drains through the steel framed structure is provided. This chapter also serves to inform the framers of the challenges facing the other trades as they complete the structure.

The residential steel framing industry is still in its infancy, and new materials and techniques are being developed for the trades to assist them in their task of installing the required services in homes. If there are any questions regarding the installation of services, or what special techniques and procedures are necessary, the tradesperson should discuss these with the local building official prior to beginning work.

Specific Learning Objectives

After completing the chapter the student should be able to:

Objective 19.1: Recognize that the current national and provincial building codes govern the installation and operation of plumbing, electrical, and HVAC services in steel framed houses.

Objective 19.2: Understand the need for communication between the framers, designers, homeowners, and tradespersons before, during and after construction. Understand the importance of project coordination for steel framed residential construction.

Objective 19.3: Framers should demonstrate the need for providing and aligning the pre-punched holes in stud and joist sections, to accommodate the electrical and plumbing trades. Framers should also demonstrate an awareness of the framing techniques that can be used to facilitate the installation of electrical, plumbing and HVAC systems.

Objective 19.4: Tradespersons should be aware of the guidelines for making holes in studs, joists, and track sections. They must also understand the need for an engineer's guidance when making holes that do not conform to these guidelines.

Objective 19.5: Tradespersons should be able to demonstrate the ability to make various size openings in studs, joists, and track using punches, saws, and plasma cutters.

Objective 19.6: Plumbers must demonstrate an awareness of the need to maintain the structural integrity of the house frame. They should be able to describe various techniques available to install their systems and ensure the structural integrity of the house is not compromised.

Objective 19.7: Plumbers must demonstrate the proper selection and use of pipe supports, hangers, standoffs, grommets, sleeves, and fasteners to adhere to building codes, standards, and specifications for steel framed houses.

Objective 19.8: Electricians must demonstrate an awareness of the need to maintain the structural integrity of the house frame. They should be able to describe various techniques available to install their systems and ensure the structural integrity of the house is not compromised

Objective 19.9: Electricians must demonstrate the proper selection and use of wires, electrical boxes, service panels, supports, standoffs, grommets, and fasteners to adhere to building codes, standards, and specifications for steel framed houses.

Objective 19.10: HVAC installers must demonstrate an awareness of the need to maintain the structural integrity of the house frame. They should be able to describe various

techniques available to install their systems and ensure the structural integrity of the house is not compromised.

Objective 19.11: HVAC installers must demonstrate the proper selection and use of HVAC equipment to adhere to building codes, standards, and specifications for steel framed houses.

Suggested Activities

The recommended format for training for this chapter is classroom instruction followed up with discussions during the layout and assembly of the design example house. The instructor should point out the relevant sections of the building codes that pertain to the various trades.

If a hole punch or saw is available, each student should be given the opportunity to make holes in a LSF member. During the framing of the design example, point out how some of the techniques presented in the chapter could be implemented to accommodate the plumbers, electricians, and HVAC installers.

Describe how stud and floor joist spacing can be adjusted by the designer and framer to accommodate fixtures, fittings and valves. Show how to reinforce large holes with LSF material. Demonstrate where small header-trimmer assemblies could be used for plumbing fixtures such as toilets, showers, and tubs. Discuss how lintels can be used to make room for bathtub shower fixtures. Demonstrate how sheet metal can be applied to floor joist flanges and wall stud flanges to create paths for the HVAC system.

Most importantly, engage the students in discussion surrounding the need for communication and project coordination among the various trades having responsibility for residential construction.

Materials and Equipment

Materials and equipment required for this chapter is summarized in the table below:

Item	Quantity
Hole Punch, Hole Saw	1 each
Grommets, ties, standoffs for pipe and wire	10 each
National Building Code of Canada (reference)	1
Ontario Building Code (reference)	1
Sheet steel, fasteners, and accessories	-
Electrical wire and boxes	-
Copper and plastic water supply piping	-
DWV plastic piping	-

19. UTILITIES – THE OTHER TRADES

19.1 Introduction

Heating, air conditioning and ventilation services can be provided in steel framed houses in a manner similar to wood framed dwellings. Most plumbing and electrical services are easily accommodated using the knock-outs provided in steel studs and joists.

The purpose of this chapter is to provide guidelines to the tradespersons who install the electrical, HVAC, and plumbing services in steel framed dwellings. Advice on how to run wire, ducts, pipe and drains through the steel framed structure is provided. This chapter also serves to inform the framers of the challenges facing the other trades as they complete the structure.

The residential steel framing industry is still in its infancy, and new materials and techniques are being developed for the trades to assist them in their task of installing the required services in homes. If there are any questions regarding the installation of services, or what special techniques and procedures are necessary, the tradesperson should discuss these with the local building official prior to beginning work.

This chapter is divided into the following sections:

Section 19.2: General Considerations
Section 19.3: Holes to Accommodate Services
Section 19.4: Plumbing
Section 19.5: Electrical
Section 19.6: Heating, Ventilating, and Air Conditioning (HVAC)

19.2 General Considerations

Residential steel framing is relatively new to the trades. Because of this it is reasonable to assume that some tradespersons will be hesitant to consider bidding on these types of contracts in the same way that they estimate wood framed structures. While some differences exist between wood framing and steel framing, the student should by now realize that most of these differences and challenges can been overcome by simple and inexpensive solutions.

All applicable national, provincial, and regional building codes will still apply to any steel framed dwelling and the services provided by the trades. The major trades involved in this area are plumbing, electrical and HVAC (heating, ventilating and air conditioning). Reference will be made to the appropriate sections of the *OBC* in the following discussion for each trade.

The framer must be conscious of the fact that other services will be installed in the house. If at all possible, the framer, architect/designer, and sub-trades should discuss the frame and service layouts in advance of the framing activity. This way the framer can leave sufficient space for the services and minimize any problems for the sub-trade.

Plumbing, electrical and HVAC systems must be installed in such a way that they do not destroy the integrity of the structural framing members. At the same time, the frame can be designed and assembled to accommodate services such as ducts, vents, and plumbing stacks that must pass through the structure.

As with any successful residential project, communication and project coordination are extremely important for all involved.

19.3 Holes to Accommodate Services

19.3.1 Framers

Holes in the steel frame for running pipes, wire, and ducts are a common need for all the trades. During the layout and assembly of the steel frame the framer can assist the trades by paying attention to the following aspects of the frame assembly:

- Ensure all pre-punched stud and joist holes are in-line. This will assist the electricians with their wiring, and the plumbers with the water supply systems.
- Provide holes (drilled or punch-outs) in wall studs under windowsills and above openings. Use open lintels rather than box lintels over window and door openings.
- Custom holes should be round unless otherwise advised by a design professional.
- Ensure punch-outs line up in corner studs. Use the corner stud configuration as shown in CSSBI *Installation Manual*, Figure 6.2.6, that allows access into the corner. If a corner stud is inaccessible after framing, install a grommet in the pre-punched holes before securing the corner studs.

19.3.2 The Other Trades

Responsibility also rests with the trades to make appropriate use of the punch-outs in studs and joists. The trades should adhere to the following principles about making holes in the steel frame:

- Holes should not exceed 35% of web depth. The exception is 3 – 5/8" (92 mm) wall studs. Table 19.1 shows maximum permitted hole sizes for various steel web depths;
- Holes should be located in the middle of the web;
- Never cut or punch the flanges of a stud, joist, or track;
- Holes should not be closer than 12 in (300 mm) from the end or bearing point of a stud or joist;
- Holes should not be closer than 24 in (600 mm) to an adjacent hole in the same stud or joist. The pre-punched holes are typically placed at this spacing.

Table 19.1: Maximum Allowable Hole Sizes in Studs and Joists

Member Depth		Maximum Hole Diameter	
inches	millimeters	inches	millimeters
3 – 5/8	92	1 – 1/2	38
6	152	2 – 1/8	54
8	203	2 – 7/8	73
10	254	3 – 1/2	89

19.3.3 Hole Punches, Saws and Plasma Cutters

Manual punches are available that fit around the flange and punch 1 3/8 in (35mm) holes in LSF members that are up to 0.033 in (0.84 mm) thick. CSA approved grommets are available to fit in holes of this size.

FIGURE 19.1 HOLE PUNCH

For steel thickness greater than 0.033 in (0.84 mm), and for holes up to 6 in (150 mm) in diameter, hole saws are available. These saws are used on a drill motor and cut through the steel leaving a small burr on one edge.

FIGURE 19.2 HOLE SAW

Plasma cutters can also be used to make holes in the web of an LSF member. A welding unit and a separate power source are required whose expense may be justified for high volume work. Plasma cutters cut quickly but can leave rough edges.

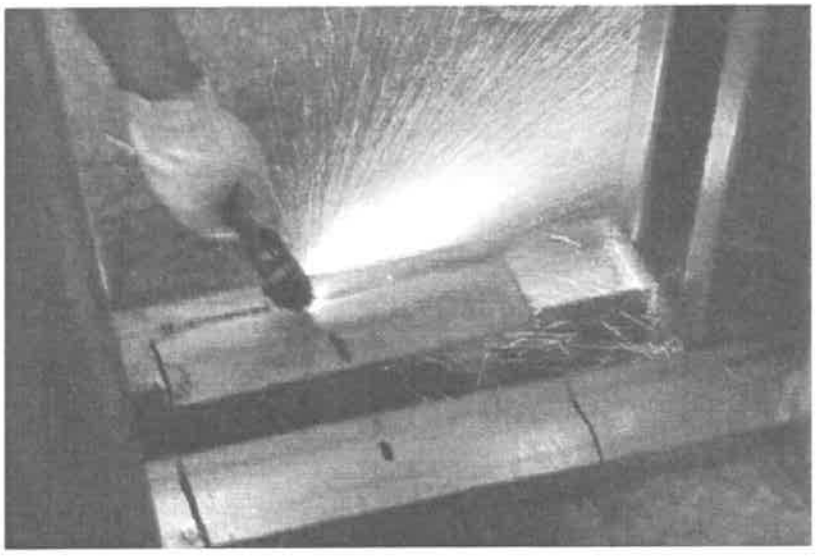

FIGURE 19.3 PLASMA CUTTER

19.4 Plumbing

The installation of water supply systems, drains, waste water pipes and vents is done in accordance with building codes, Canadian standards and material specifications. The relevant parts of the *OBC* that deal with the plumbing trade are Part 7 and Part 9 Section 9.31 .

Plumbing for residential dwellings is determined during the design and drafting of plans. The location of bathrooms, kitchens, and laundry rooms are identified on the plans. Within each room the plumbing fixtures, sinks, showers, toilets, bidets, laundry tubs, bathtubs, etc., are also all identified. What is seldom identified at this design stage is the actual location of runs for the pipes, drains, vents, and valves. The detailed design is done by the plumber after the structure is framed and the plumber has an opportunity to be on site and see the structure. Further complicating this is the homeowner's preferences and requests for changes to the original plans for the dwelling.

There is seldom a pre-planned optimal plumbing layout design in residential construction. Each plumber will plan their own system, adhering to the principles of the trade and the building codes. The installation may sometimes be difficult due to the way in which the frame has been assembled, and the location of the plumbing services within the house.

The plumber can affect the structural integrity of a building in order to conform to the plumbing code requirements. Currently plumbers have a good understanding of the changes they can make to the structure in a wood framed house. They also have the tools and material to "fix" any changes that they make so the structural integrity of the frame is maintained. Plumbers are not as familiar with steel framed dwellings and it will take time and education about steel framing to provide them with the knowledge needed to install their services without affecting the structural integrity of the steel frame.

The following sections discuss several requirements from *OBC* Part 7 and provide some solutions for the plumber working in a steel framed dwelling. These solutions are a good indication of the need for framer and plumber to work cooperatively to achieve their objectives.

19.4.1 Pipe Fittings

OBC Section 7.2.4. *Pipe Fittings* governs the use of fittings such as Y's and T's. When laid out according to the code, fittings may need more than one floor or wall cavity. Fittings are often pre-assembled and moved into place during installation making it necessary to cut floor joists, wall studs, and track sections. When such practices are unavoidable, some reinforcing and alteration must be done to retain the structural integrity of the affected LSF member(s) and the affected portion of the building frame.

Solutions to this problem are constantly being developed. Techniques currently being used include:

- Change the spacing of floor joists and/or wall studs.

  Space joists or studs at 19 in (480 mm) o/c or 24 in (600 mm) o/c instead of the normal 16 in (400 mm) for the joists and walls in bathrooms. LSF member sizes and thickness can be selected from the CSSBI *Member Selection Tables* as was discussed in Chapter 4 Design Process.

  To avoid having to increase the web depth , the member thickness can be increased. A thicker subfloor sheathing may also have to be selected during the design stages.

- Design a header-trimmer or rough opening assembly for the affected area.

  The CSSBI *Member Selection Tables* may be used as a reference to design a 'floor opening' that can accommodate the plumbing fitting. The opening will be covered up with subfloor sheathing. A thicker subfloor may have to be used.

  In walls a 'window opening' with a lintel and window sill can be designed to house the fitting. Spacing of the wall studs should be appropriate for drywall application.

- Increase wall depth for plumbing and HVAC services.

  Use deeper stud sections in bathroom and utility room walls to increase the cavity depth as shown in Figure 19.4. Using a 6 in (152 mm) stud in place of a 3 – 5/8 in (92 mm) will not seriously affect the aesthetics of the house interior.

  Deeper wall cavities can also serve as HVAC chases.

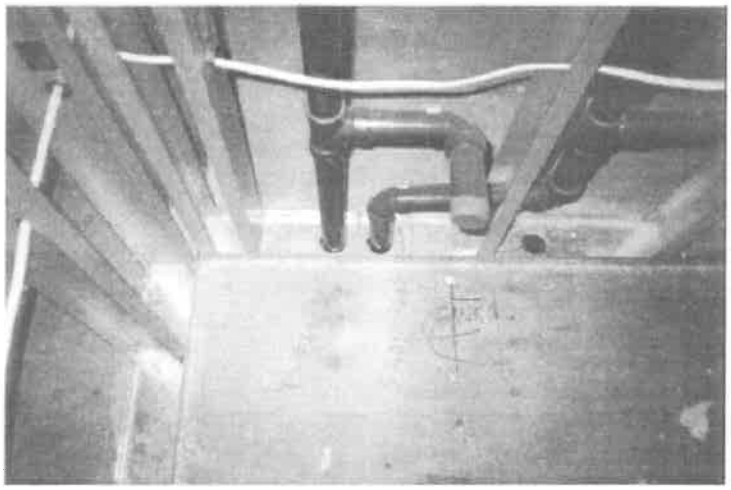

FIGURE 19.4 DEEP STUDS FOR WALL CAVITY

- Reinforce any holes that are more than 35% of the web depth.

  An opening that requires the removal of stud and joist web that is greater than the 35% rule can be reinforced with pieces of framing material.

  NOTE: The removal of more than 35% of web, and the reinforcement of such a hole, should only be done under the direction of an engineer. CSSBI is currently developing standard methods to reinforce LSF members in these situations.

19.4.2 Shower Valves

OBC Section 7.2.10.7. *Shower Valves* governs the mandatory installation of pressure balanced shower valves. A shower valve is a large body fixture and it and the riser pipe often interfere with the stud(s) in the wall at the head of the bathtub or shower.

Some possible solutions that require the framer's participation include:

- Reposition the wall studs in non-load bearing walls.

  Determine if the wall is non-load bearing. Non-load bearing studs can be repositioned to accommodate the valve. Remember to space studs for drywall applications.

- Change the spacing of wall studs in load bearing walls.

  Space studs at 19 in (480 mm) o/c or 24 in (600 mm) o/c instead of the normal 16 in (400 mm) for the walls in bathrooms. LSF member sizes and thickness can be selected from the CSSBI *Member Selection Tables* as was discussed in Chapter 4 Design Process.

  Install additional load bearing studs at locations that will provide sufficient clearance for the valve, then remove the interfering stud.

Select the stud member(s) from the CSSBI *Member Selection Tables*. The spacing should not be greater than that indicated in the tables.

- Design a rough opening assembly for the affected area.

  The CSSBI *Member Selection Tables* and *Installation Manual* may be used as a reference to design a 'window opening' with a lintel and window sill to house the valve. Spacing of the wall studs should be appropriate for drywall application.

- Consult a design professional to develop a wall structure to accommodate the shower valve.

19.4.3 Expansion and Contraction

OBC Section 7.3.3.10. *Expansion and Contraction* requires that the installation allow pipe movement due to temperature changes. The purpose is to limit noise and avoid damage to plastic pipe if it chafes on the steel frame.

For example, a 20 ft (6.1 m) length of ABS DWV pipe can experience a temperature change of 33.3°C (92° F) when hot water from a dishwasher is drained. This temperature change will cause the pipe to expand as much as 1 -1/4 in (32 mm). For DWV passing through a steel stud or joist, the hole must therefore be larger than the pipe and fitting to accommodate this type of movement.

A CSA approved grommet, sleeve or standoff is recommended to separate the pipe from the steel member. Figure 19.5 illustrates a sleeve-type protection for DWV passing through a floor joist.

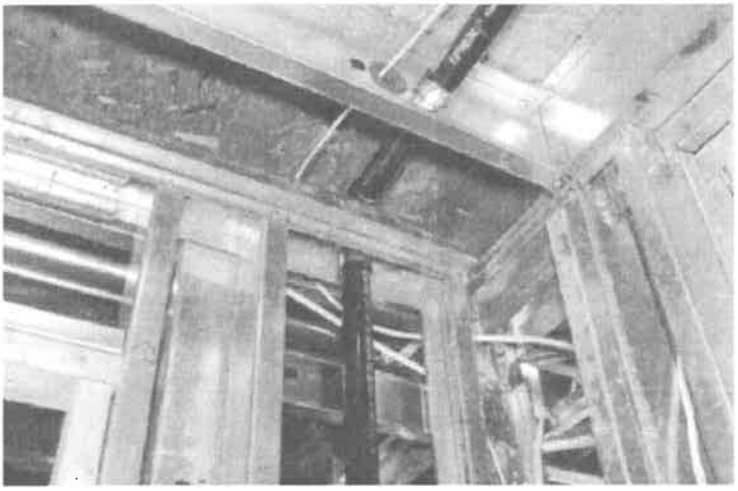

FIGURE 19.5 SLEEVE PROTECTION FOR DWV IN FLOOR JOIST

19.4.4 Support of Piping

OBC Section 7.3.4.1 *Capability of Support* requires support for piping, fixtures, and their contents to limit the loading on piping and joints. Hangers and other support accessories are available for piping. Figure 19.6 shows two types of supporting clamp accessories:

- a standoff type for use where pipe runs parallel to the framing member;
- a suspension type for pipe running through pre-punched or drilled holes or under floor joists.

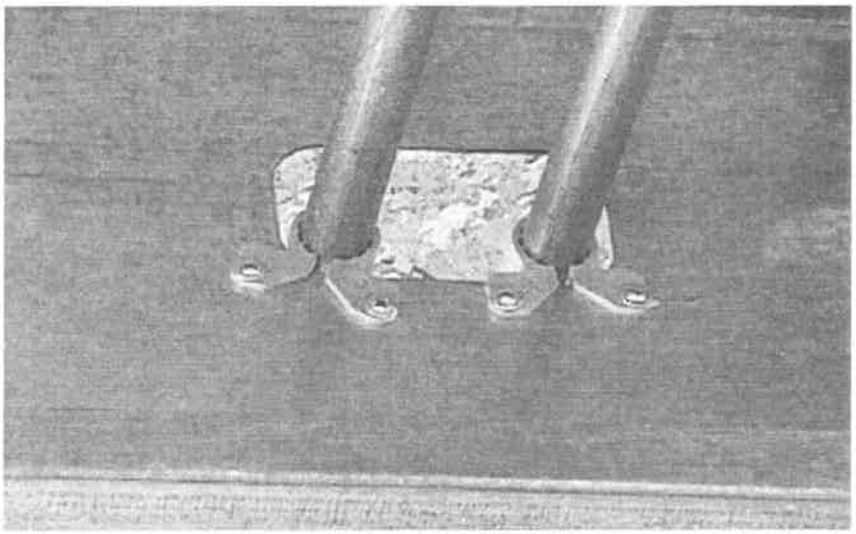

FIGURE 19.6 PIPE STANDOFFS & SUSPENSION CLAMPS

OBC Section 7.3.4.3. *Insulation of Support* requires that bare copper or brass pipes, fittings and fixtures be isolated from the steel to prevent galvanic corrosion[1]. The standoff/support or similar accessories illustrated in Figure 19.6 will serve to provide the required isolation so that galvanized steel is not in contact with copper or brass.

OBC Section 7.3.4.5. *Support for Horizontal Piping* specifies the support requirements for horizontal piping. The support accessories (or similar) of Figure 19.6 will be required under the following situations:

- every 47 in (1200 mm) for ABS or PVC DWV;
- at the ends of branches;
- at changes of direction or elevations;
- as close as possible to the trap at fixture drains more than 39 in (1000 mm);

[1] Long term direct contact between copper and zinc-protected steel shows little galvanic corrosion.

- at the base of every riser;
- every 98 in (2500 mm) for copper water supply
- every 39 in (1000 mm) for plastic water supply

19.4.5 DWV in Floors and Walls

OBC Section 7.4 *Drainage Systems* and Section 7.5 *Venting Systems* define the requirements for Drains, Waste, and Vent (DWV) piping. Drain and waste piping 3 in (75 mm) diameter and less must run at a slope of 1:50 (0.250 inch fall per foot of run). There is no specified grade for venting, but most horizontal vents are run at the same grade as drain and waste piping. The *OBC* requires there be no sags in the DWV piping. Long runs of DWV piping running transverse to floor joists will have to be supported. Flexible steel straps may be attached to floor joists to support the suspended pipe.

The common installation technique for DWV pipes with wood framed homes is to slide the pipe through a series of holes drilled or punched through the studs or joists. The same technique can be used with steel framed homes, provided the holes are large enough to prevent snagging or interference during installation. Follow the maximum hole size guidelines in Table 19.1 and provide hole grommet, sleeve, or stand-off protection.

Holes in steel members to accommodate pipes, must be large enough to accommodate the grommet and the pipe. When sizing holes the plumber must include the inside diameter plus pipe wall thickness plus grommet/sleeve/stand-off space. The added thickness of any ABS coupling or hub may preclude accommodation in a web hole and the pipe will need to installed so that the coupling/hub is between the steel members. The grommet supplier may provide further advice about the required hole size.

19.4.6 Protection of Pipes

Metal protection plates are a feature frequently used in wood framing that will not always be necessary with steel. Normally these would be metal plates (called nailers or nailer plates), nailed to the face of the wood stud when piping is not positioned at mid-depth of the stud cavity.

These plates are used to avoid pipe damage from drywall screw or nails. Piping may also be held forward in the wall cavity to avoid ducts, wires and other pipes, and when installed in exterior walls, to allow placement of insulation behind the pipe. Examples of this include a kitchen drain in an outside wall and under a window, and a fixture drain positioned at mid-depth so that water lines have to be held to one side of the cavity.

Since steel framed walls are insulated with a rigid foam insulation on the cold side, water supply pipes can be safely positioned in the pre-punched

holes and plate protection is not needed. If pipes (and wires) are not positioned in the middle of the web then they must be protected from puncture. An example of this is a large diameter DWV pipe in a six-inch wall. One solution is to place a piece of steel strapping or sheet steel over the area. Steel strapping is used for packaging of many construction materials and should be available at the job site. It is very hard and resistant to penetration by drilling but can be taped or glued in place prior to placement of the drywall.

19.4.7 Fixture Installation

OBC Section 7.1.7 *Location of Fixtures* and Section 7.2.2 *Fixtures* are the sections containing the requirements for fixtures. The installation of pedestal sinks, grab rails, and wall-hung urinals require strong support between the studs if they cannot be attached to a stud. The framer can provide correctly positioned blocking if consulted. The alternative is to attach a piece of sheet metal between the studs in the vicinity of the fixture.

One-piece tubs and showers are additional challenges for the plumber and framer. These large fiberglass units, normally installed after the house is framed and enclosed may require the temporary removal of wall members to avoid damage and permit installation. These fixtures also require framing member support as shown in Figure 19.7. Again, co-operation and communication between the framer and plumber is advised.

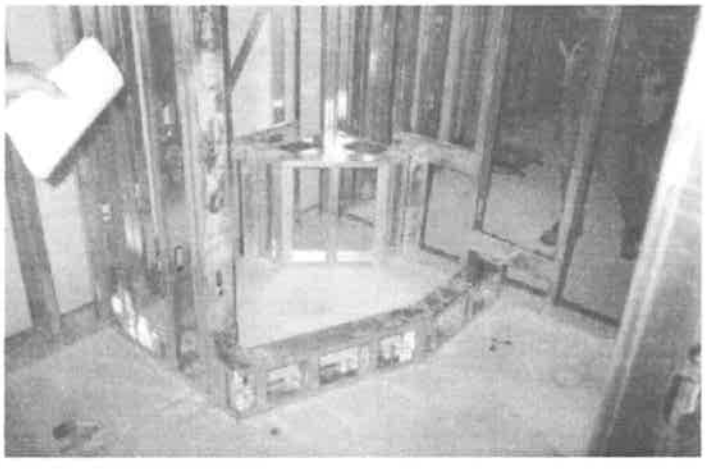

FIGURE 19.7 STEEL FRAMING SUPPORT FOR SHOWER

Some fixtures by their design and installation pose restrictions that must be noted when framing the floor. For example, WC's (toilets) are almost always installed tight to back and side walls. They have standard centering of the floor flange, 13 in (330 mm) from the back wall, and 17 in

(432 mm) from the side wall. This may dictate a different positioning of the floor joists. A similar situation exists for enameled steel bathtubs. They are located 14 – 1/2 in (368 mm) side to centre, and 8 – 3/4 in (222 mm) end to centre. The special framing and plumbing requirements for whirlpool baths further stress the importance of consultation between framer and plumber.

There are additional requirements that fixtures have traps, that they be vented within 59 in (1500 mm), and the vents connect above the flood level rim of fixtures.

19.4.8 Sound Transmission

Noise from the pumps in whirlpool tubs and other pressure systems can be controlled by ensuring adequate support of the fixture and pump, and by isolating the fixture and pump from the steel frame. This can be achieved using insulation, wood, or expanding insulation (foam) between the fixture and frame. Avoid direct contact with walls and step-ups.

19.4.9 Fasteners for Pipe Supports

The pipe supports described in 19.4.4 should be attached to the frame with a # 6 self-piercing screw for non-load bearing studs and a #8 self-drilling screw for load bearing studs and joists. Due to potential for dissimilar metal reactions, copper hangers should not be directly attached to steel. Use plastic, steel or isolate copper hangers with plumber's tape. Hangers are available from normal plumbing supply sources.

19.5 Electrical

The installation of electrical wire, lights, switches, outlets, and fuse boxes is done in accordance with building codes, Canadian standards and material specifications. The relevant part of the *OBC* the deals with the residential electrical trade is Part 9 Section 9.34 *Electrical Facilities.*

The electrical requirements for residential dwellings are determined during the design and drafting of plans. Within each room the electrical light fixtures, switches, outlets, etc., are also all identified. What is seldom identified at this design stage is the actual location of runs for the wires. The detailed design is done by the electrician after the structure is framed and the electrician has an opportunity to be on site and see the structure. Further complicating this is the homeowner's preferences and requests for changes to the original plans for the dwelling.

There is seldom a pre-planned optimal electrical layout design in residential construction. Each electrician will plan their own system, adhering to the principles of the trade and the building codes. The installation may sometimes be difficult due to the way in which the frame has been assembled, and the location of the electrical services within the house.

The electrician will seldom affect the structural integrity of a building in order to conform to the electrical code requirements. Currently electricians have a good understanding of the changes they can make to the structure in a wood framed house. They also have the tools and material to "fix" any changes that they make so the structural integrity of the frame is maintained. Electricians are not as familiar with steel framed dwellings and it will take time and education about steel framing to provide them with the knowledge needed to install their services without affecting the structural integrity of the steel frame.

The following sections discuss several requirements from *OBC* Part 9 and provide some solutions for the electrician working in a steel framed dwelling. These solutions are a good indication of the need for framer and electrician to work cooperatively to achieve their objectives.

19.5.1 Using Pre-Punched Holes

Electricians should use the pre-punched holes in the steel framing members. Some additional electrical wiring may be required since the pre-punched holes are at regular intervals and the maximum number of lines that can pass through them is restricted.

Similar to plastic plumbing, plastic insulated electrical wire (romex type) must be protected from the edges of pre-punched or drilled holes in the steel framing members with grommets. Grommets should be CSA approved for electrical use. An alternate line material that does not need protection from the steel is metal-shielded (BX type) wire.

The number of plastic insulated electrical wires that can be passed through a grommetted hole is restricted by code. This controls possible dislodging of the grommet and burning of the plastic insulation. Care must be taken during installation to ensure grommets remain in place.

If the electrician needs to make their own holes in joists, stud or track, the rules provided in Section 19.3 should be followed.

19.5.2 Standoff Support

Plastic insulated wire must be installed so that it standoffs from vertical framing members and is supported at 3 ft (0.9 m) intervals. Numerous CSA approved standoffs are available for this purpose. One type is illustrated in Figure 19.8.

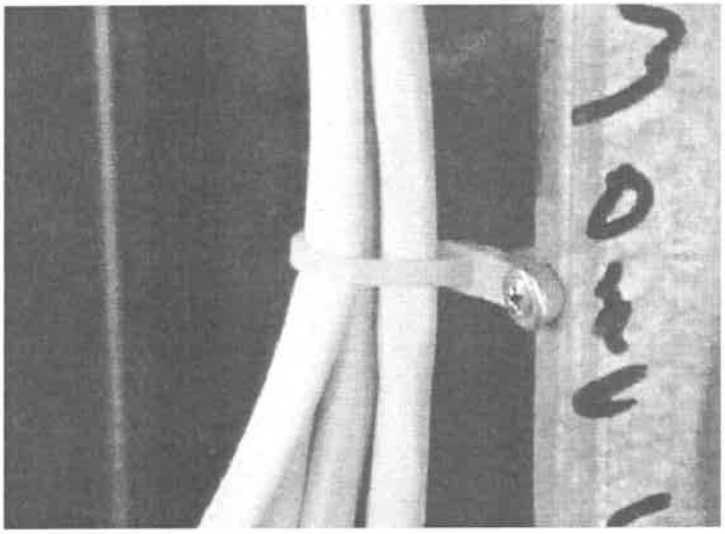

FIGURE 19.8 STANDOFF FOR ELECTRICAL WIRE

19.5.3 Electrical Boxes

Electrical boxes for switches, wall outlets and junction boxes must be CSA approved. Attach the box according to the supplier's instructions. If no directions are provided attach the box in at least two locations using #10 self-drilling screws. Electrical boxes with side-mounted tabs are available for ease of fastening to the web of studs. The box must have adequate support and should be attached to a stud or blocking where appropriate. Figure 19.9 illustrates a triple switch box attached to the wall stud.

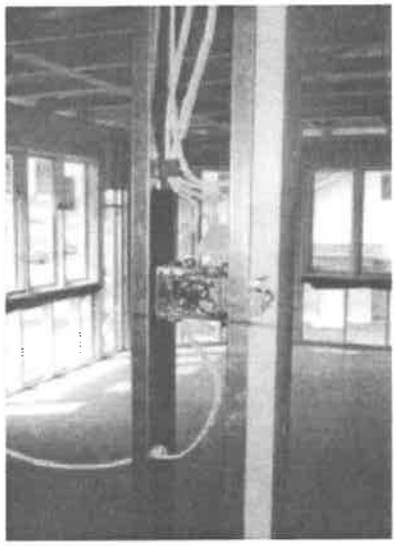

FIGURE 19.9 TRIPLE SWITCH BOX SUPPORTED BY WALL

19.5.4 Service Panels

The service panel can be attached to steel studs with steel or wood blocking for additional backing support. Steel or wood blocking above the panel will provide support for the wires entering the panel.

19.5.5 Protection Plates

Electrical wiring may need protection if it is not located in the middle of the stud or joist. Wiring that is placed close to the flange, could be damaged by drywall screws, cabinet installation, or other screw and nail applications. Use the protection plates and techniques described in Section 19.4.6 above.

19.5.6 CSA Requirements

Grommets, standoffs and any other protective or supporting device for electrical wiring must be Canadian Standards Association (CSA) approved. A CSA approved part has been tested according to certain stringent requirements for exposure to heat and voltage and resistance to dislodging under load. Some of these testing criteria are described below:

- Heat Resistance – testing determines distortion at elevated temperatures.
- Voltage Withstand for Grommets – testing determines resistance to disintegration from applied arc voltage
- Voltage Withstand for Standoffs – similarly determines disintegration resistance for standoffs
- Secureness – testing determines resistance of the grommet to dislodging from impact and pullout loading

19.6 Heating, Ventilating, and Air Conditioning (HVAC)

Heating, ventilating, and air conditioning (HVAC) is installed in a steel framed house in similar fashion as wood framed construction. The framing and HVAC contractors should discuss each other's needs for the project (location of equipment and duct runs) before framing commences. *OBC* Part 6 *Heating, Ventilating and Air Conditioning*, Part 9 Section 9.32 *Ventilation*, and Part 9 Section 9.33 *Heating and Air Conditioning* govern the installation and operation of HVAC systems.

The placement of plenums, warm air take-offs, registers, return air ducts and flues should be pre-planned as much as possible to avoid complications with the framing structure and other services. Similar to plumbing and electrical, HVAC services must not compromise the steel frame by removal of load bearing framing members, removal of a member flange or placing web holes beyond the recommended maximum of 35% of member depth. The remedies for framing alterations described in Section 19.3 Holes to Accommodate Services and Section 19.4 Plumbing can be employed for HVAC systems.

19.6.1 Furnaces and Ancillary Equipment

Furnaces and attached ancillary equipment (humidifier and air cleaner) should be centrally located to provide sufficient air distribution. Centrally locating the furnace will minimize the number and length of duct runs and minimize the loss of heat energy. Heat exchangers, ventilation and heat recovery ventilation systems can be located and installed according to normal practice and manufacturer's recommendation.

19.6.2 Plenums, Ducts and Returns

Heat plenums can be suspended below floor joists with metal strap supports as shown in Figure 19.10. Warm air takeoffs and ducts can be run between joists as shown in Figure 19.11.

FIGURE 19.10 HEAT PLENUM SUSPENDED BELOW FLOOR JOISTS

FIGURE 19.11 WARM AIR DUCT BETWEEN FLOOR JOISTS AND ADJACENT COLD AIR RETURN USING FLOOR JOISTS AND SHEET METAL COVER

Cold air returns can use the cavities between wall studs and floor joists. A simple sheet metal cover, attached with self-drilling screws to the bottom flanges of adjacent floor joists and wall studs, will serve as a cold air return. Where the return uses studs and joists as part of the 'box', the pre-punched holes should be closed with duct tape placed on the outside of the stud so it can't be drawn into the return system if it ever comes loose.

Sections of the track web in non-load bearing walls can be removed to accommodate heat risers and cold air returns. The track should be fastened with screws on either side of the opening to secure the track.

20. CONCLUSION

20.1 Thank You for Considering Steel!

Thank you for your interest in residential cold formed steel framing! This curriculum has been designed to address the lack of expertise that exists in the Canadian residential steel framing market by providing training and assistance for one of the fastest growing construction industries in North America.

Steel framing does not have the benefit of being a well-established and widely known method for framing residential structures. Only a handful of experts are available to assist in the art and science of residential steel framing. You are now on your way to becoming one of those skilled tradespersons capable of framing homes with cold formed steel.

This manual is a training tool for the novice steel framer and should be used in conjunction with the other publications referred to in this document. It is not a "Building Code" in and of itself, but it does provide standards and guidelines for residential steel framing that will meet the structural needs of a home and satisfy the requirements of most local building authorities.

The purpose of this final chapter is to summarize the steel framing curriculum document. It provides a brief overview of each chapter and the names of the participants and organizations responsible for its creation and on-going maintenance.

20.2 Chapter Summaries

Chapters 1 through 8 provide background information about steel framing. These chapters discuss specific safety issues surrounding steel, describe the steel framing materials and how they are manufactured and identified, and explain the tools and fasteners required.

Chapters 9 through 16 deal with the actual framing process. From the foundation to the roof, these chapters provide the student with information about the layout and assembly of floor, wall, and roof systems made from steel.

Chapters 17 through 20 discuss the other residential construction tasks associated with vapour and air barriers, insulation, building services (i.e. HVAC, plumbing, electrical), and interior and exterior finishes.

Many of the chapters provide instructional "how to" directions for hands-on training. Hands-on training is essential to learn the proper steel framing techniques. It is highly recommended that students receive hands-on training before attempting to frame steel houses on their own.

Each chapter is divided into sections and sub-sections to help organize and cover as many topics as thoroughly as possible. Figures are included in each chapter to help clarify or support important points or difficult ideas.

Chapter 1 **Introduction**
The purpose of this chapter is to introduce students to the relatively new technique of residential framing with cold formed lightweight steel. In this introductory chapter the student will become familiar with the benefits of using steel for residential framing. They will also be taken through a review of general carpentry and framing terminology and introduced to some of the terminology that is specific to steel framing.

Chapter 2 **Job Health and Safety**
The purpose of this chapter is to develop the ability of the student to recognize construction site hazards, to make appropriate decisions regarding protective equipment and procedures, and understand specific safety requirements associated with steel frame construction. They should be able to identify and demonstrate the safety precautions required when working with steel. They should understand and be able to reference the applicable Ontario *Occupational Health and Safety Act and Regulations* for general job site safety.

Chapter 3 **Design and Material Standards**
The purpose of this chapter is to familiarize the student with the different types of residential steel frame construction, steel frame design, the role of the designer and building code official, and the material standards and specifications for cold formed LSF materials.

Chapter 4 **Design Process**

The purpose of this chapter is to identify the design and member selection process for a steel-framed house using the following CSSBI publications:

- *Steel Framing for Part 9 Construction;*
- CSSBI *Installation Manual;*
- CSSBI *Member Selection Tables;*

and the appropriate building codes.

This chapter provides the student with the necessary information to allow them to select stud and joist members for their own residential projects that fall within the limits of the prescriptive method. Reference to the National Building Code of Canada (*NBCC*) and the Ontario Building Code (*OBC*) is made, specifically with regards to the determination of design factors with respect to climate, and the calculation of live and dead loads acting on the structure. The structural design of roof framing is also briefly discussed, but the student is reminded that the design of a steel framed roof must be done by a design professional (engineer, architect).

Chapter 5 **Manufacturing Steel**

The purpose of this chapter is to familiarize the student with the production of steel, sheet steel, and cold formed LSF materials. The student will also be introduced to the process of ordering LSF from a roll former, supplier, and distributor.

Chapter 6 **The Cut-List, Ordering and Steel Delivery**

The purpose of this chapter is to provide the student with a process for LSF quantity take-off, and to give them an example procedure that they can follow to develop their own cut-list for a residential steel-framing project. A cut-list results from an accurate material take-off from the blueprints, and lists the LSF requirements by type, size, length and quantity. This chapter provides a detailed example of how to create an accurate cut list for the LSF members of the design house described in Chapter 4 (exclusive of the house roof framing).

Chapter 7 **Tools**

The purpose of this chapter is to identify the correct tools to use on residential steel framing projects and to train the students in the correct use of these tools. The layout and assembly procedures used in residential steel framing are similar to those used with wood, although a number of different tools and accessories are needed.

Before beginning any steel framing project, the correct tools should be available and the workers should have proper training in their use. This chapter discusses the different types of fastening, cutting, bending, and miscellaneous power and hand tools required for steel framing.

Chapter 8 **Fasteners**

The purpose of this chapter is to identify the fastening systems that are used for residential steel framing, and to train the students in the correct selection and use of these fasteners. This chapter familiarizes the student with the different types of fastening systems available for steel framing and the selection of an appropriate fastener.

Fasteners include screws, nails or pins, clinches, welds, and foundation anchors. Because screws are the predominate fastener used in steel framing, a large section of this chapter is dedicated to screws.

Chapter 9 **Foundations**

The purpose of this chapter is to familiarize the student with the different types of basement foundations that may be used in conjunction with steel framing, and the various anchoring methods used to attach the steel frame to the foundation.

The student will be shown how to anchor the steel frame (first floor assembly) to the top of foundation using both a wood sill plate and direct bearing anchorage systems. The options for foundation anchors will also be discussed.

Chapter 10 **Floor Joists**

The purpose of this chapter is to introduce the student to the design considerations for floor joist orientation, to familiarize the student with the layout, assembly, and bracing of floor systems, and to discuss the subfloor and floor finish considerations for steel framed floors.

Chapter 11 **Load Bearing Walls**

This chapter discusses the methods for load bearing wall assembly, header assemblies, rough opening framing, wall bracing, and other considerations for the LSF building. While there are some similarities between wood and LSF load bearing wall layout and assembly, LSF has specific details that require attention.

The importance of in-line framing cannot be emphasized enough in this chapter. Students must understand the need for wall studs and floor joists to be aligned in order that the structure will support the loads it has been designed to carry.

Chapter 12 **Roof Rafter Framing**

The purpose of this chapter is to introduce the student to the procedures for the layout and assembly of LSF ceiling joists and roof rafters. It briefly touches on the design aspects of roof structures, but it is not expected at this time, that a framer would have the responsibility of designing or selecting LSF member sizes for roof rafters.

Steel framed roofs are similar to conventional wood rafter or truss construction. There is no prescriptive method for steel framed roofs (rafter or truss type) in Canada at this time. The builder must retain an

engineer to design the roof framing members and connection details if the roof is to be framed with rafters.

Chapter 13 **Roof Trusses**

The purpose of this chapter is to introduce the student to the procedures for the layout and installation of LSF roof trusses. It briefly touches on the design aspects of roof structures, but it is not expected at this time, that a framer would have the responsibility of designing LSF roof trusses.

Chapter 14 **Hip Roofs**

The purpose of this chapter is to introduce the student to the procedures for the layout and assembly of hip roofs. A description is provided for both stick-framed hip roofs and truss-framed hip roofs.

Chapter 15 **Specialty Framing**

The purpose of this chapter is to describe how curved floor and wall openings, archways, and dormers are constructed using LSF framing materials. The application of drywall to curved surfaces using both dry and wet techniques is briefly discussed.

Chapter 16 **Non-Load Bearing Walls**

The purpose of this chapter is to describe and practice the methods for non-load bearing wall layout and assembly. They are different from load bearing walls in that they are not designed to support overlying live and dead loads or resist lateral loading (wind and seismic loading)

Framing techniques for intersecting walls, door and wall openings are discussed. Special framing and blocking considerations for cabinets, shelves, and assorted trim work is also described in this chapter.

Chapter 17 **Thermal, Vapour, and Air Barriers**

The purpose of this chapter is to describe the requirements for the control of air, moisture, and heat transfer when a structure is constructed with light gauge steel. The approach is to provide barriers or retarders against the flow of heat energy, air, and vapour using materials and techniques that are similar to wood framing.

A brief overview of the barrier types is followed by the requirements for installation of the barriers. Special emphasis is given to the need for a "thermal break" when using LSF materials to frame residential dwellings due to the high conductivity of steel.

Chapter 18 **Exterior Finishes**

The purpose of this chapter is to learn about exterior finishes and how they are attached to the steel framed house. Although the final appearance of the house will be similar to that of a wood framed dwelling, the methods of attaching the exterior finishes are sometimes specific to steel framed homes.

A brief discussion surrounding cladding and exterior finishes is presented, and followed by the details of the fasteners and fastening techniques. These exterior finishes include metal and vinyl siding, wood and wood products, masonry, stucco and other cement products.

Chapter 19 **Utilities – The Other Trades**

The purpose of this chapter is to provide guidelines to the tradespersons who install the electrical, HVAC, and plumbing services in steel framed dwellings. Advice on how to run wire, ducts, pipe and drains through the steel framed structure is provided. This chapter also serves to inform the framers of the challenges facing the other trades as they complete the structure.

Chapter 20 **Conclusion**

The purpose of this final chapter is to summarize the steel framing curriculum document. It provides a brief overview of each chapter and the names of the participants and organizations responsible for its creation and on-going maintenance.

20.3 Why Use Steel?

Steel is one of the most durable and versatile of building materials. Contractors who use steel for framing structures enjoy straighter walls, fewer call back problems, and the satisfaction that the material they frame with is durable and long lasting. Steel will not decay inside the wall cavity, nor is it subject to mold or vermin damage by insects and rodents.

Unlike wood framing materials, moisture content is not a consideration with newly purchased steel. Steel will not absorb moisture after placement in the floors, walls and roof. Steel studs, joists and other framing members are factory-coated with pure zinc (galvanized) or zinc-aluminum alloy (Galvalume ™) to resist rust and corrosion.

Steel is 100% recyclable without any degradation in material properties. Framing materials made from steel contain at least 25% recycled material. Any framing material left over after framing is easily recycled or used at the next job.

Steel framing members have a high strength to weight ratio. Individual members are lighter per unit length than traditional wood framing members. Due to the low self-weight per unit length and the strength of steel, steel joists of the same dimension as wood joists can span longer distances. By increasing the base thickness of the steel in a floor joist, the strength and span can be increased. Similiarly, steel wall studs can vary in base steel thickness depending on whether they are load bearing or non-load bearing.

Steel is non-combustible and does not contribute fuel to a fire, unlike other framing materials. Some insurance companies in both the United States and Alberta recognize the non-combustible aspects of steel by offering home insurance rates that are lower for steel framed homes. Steel is inert and does not emit fumes, gases, vapours or support the growth of molds and fungi.

Historically, steel prices have remained relatively stable while lumber prices have varied widely. Some contractors find steel price stability to be attractive when making a material choice. Labor costs for steel framers are comparable, although residential framers new to steel will not be as cost-effective as experienced steel framers. Therefore, it is advantageous for steel framers to undergo as much training as possible to effectively compete with wood framers.

The steel that is predominantly used for residential lightweight steel framing (LSF) is referred to as cold formed steel (CFS). CFS is made from sheet steel that undergoes a forming process at room temperature. This forming is known as "cold forming".

20.4 The Last Word

This curriculum is based on the American Iron and Steel Institute's (AISI) *Residential Steel Framing National Training Curriculum.* It has been adapted to suit Canadian needs expressed by the *National Building Code of Canada (NBCC)* and provincial building codes. Some steel framing requirements will vary province to province. The user is encouraged to compare steel framing techniques presented in this manual with the requirements, if any, expressed by their local building authority. The development team believes all information contained herein to be complete and accurate. If uncertainty arises at any time in the delivery of this training, or on a job site, please consult with a design professional.

Several other publications that offer assistance, guidance, and standard practices have been mentioned throughout this manual. These publications include:

- National Building Code of Canada
- Ontario Building Code
- CCMC Technical Guide for Lightweight Steel Framing
- CSSBI Installation Manual
- CSSBI Member Selection Tables

Naturally the *NBCC*, provincial building codes, and the local building code officials will have final authority.

The prescriptive method for residential steel framing was instrumental for the development of this manual and will remain the key standard for the advancement of cold formed steel framing. Many practical examples have been presented in this curriculum, but not every situation or condition can be addressed. The framing techniques, fasteners, joint details, and tools are under constant development and experimentation. The student is urged to keep in touch with AISI, NASFA and CSSBI in the years ahead as residential steel framing increases in popularity.

More information can be obtained by calling:

North American Steel Framing Alliance	1-519-686-1269
Canadian Sheet Steel Building Institute	1-519-650-1285
American Iron and Steel Institute	1-800-79-STEEL

Canadian Sheet Steel Building Institute
RE: Canadian Residential Steel Framing Curriculum

Suggestions for Improving This Curriculum

CSSBI wants your input on how this manual can be improved to better serve your needs. If you have developed new techniques for LSF assembly, or you have a new tool, fastener or fastening detail, we're interested in knowing what it is. Please write your comments below and fax this page to CSSBI at 1-519-650-8081.

Your Name:

Your Company:

Your Address:

Your Telephone Number: