CANADIAN SHEET STEEL BUILDING INSTITUTE

# LIGHTWEIGHT STEEL FRAMING

## Member Selection Tables (Metric)

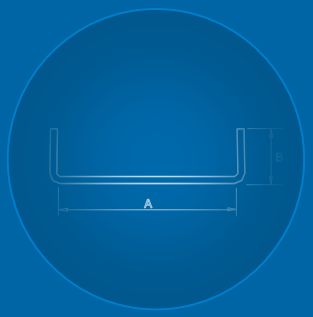

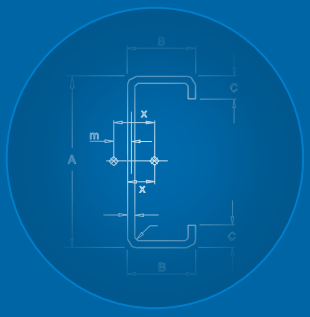

CSSBI 58-2018-r1

# REVISION NOTES

Document was originally issued in June 2018. This revised version (r1) was issued in July 2019.

The following pages have been revised in this CSSBI 58-2018-r1 version:

- On pages 20, 21, 22, 23, 28, 29, 30 and 31, the 0.25 kPa column has been changed due to correction in calculation in the June 2018 version.

Bailey Metal Products, Dass Metal Products, DCM Metal Corp., EB Métal Inc., Imperial Building Products, Manugypse, Groupe UP, Trebor Building Products Ltd.

# Certified CSSBI LSF Manufacturers

Lightweight steel framing manufacturers who are members of the CSSBI and adhere to the *CSSBI Manufacturer Certification Requirements for Cold Formed Steel Framing Members* are the only companies that have authorization from the CSSBI to utilize these tables.

| | | |
|---|---|---|
| BAILEY METAL PRODUCTS LIMITED | **Concord, Ontario**<br>Tel. 1-800-668-2154<br><br>**Dorval, Quebec**<br>Tel. 1-800- 263-3455<br><br>**Calgary, Alberta**<br>Tel. 1-800- 665-2013 | **Edmonton, Alberta**<br>Tel. 1-800- 563-1751<br><br>**Surrey, British Columbia**<br>Tel. 1-800- 818-2666<br><br>www.bmp-group.com<br>Email info@bmp-group.com |
| DASS METAL PRODUCTS | **Mississauga, Ontario**<br>Tel. 905-677-0456 | www.dassmetal.com<br>Email sales@dassmetal.com |
| DCM METAL CORP | **Etobicoke, Ontario**<br>Tel. 416-742-7642 | dcm-metal.com<br>Email sales@dcm-metal.com |
| EB Métal INC. | **St-Mathieu de Beloeil, Quebec**<br>Tel. 450-464-6856 | www.groupebeauchesne.com<br>Email info@groupebeauchesne.com |
| bp IMPERIAL BUILDING PRODUCTS | **Richibucto, New Brunswick**<br>Tel. 506-523-9117<br><br>**Fusion Building Products**<br>**Laval, Quebec**<br>**Brampton, Ontario**<br>Tel. 514-260-5372 | www.imperialgroup.ca<br>Email customer.service@imperialgroup.ca |
| MANUGYPSE | **Quebec, Quebec**<br>Tel. 1-800-871-5818 | www.manugypse.com<br>Email contact@manugypse.com |
| GROUPE UP | **Terrebonne, Quebec**<br>Tel. 1-866-311-1122 | www.groupeup.com<br>Email mcharest@upd.ca |
| TREBOR BUILDING PRODUCTS LTD. | **Ottawa, Ontario**<br>Tel. 1-866-401-9990 | treborbuildingproducts.com<br>Email info@trebormanufacturing.com |

Bailey Metal Products, Dass Metal Products, DCM Metal Corp., EB Métal Inc., Imperial Building Products, Manugypse, Groupe UP, Trebor Building Products Ltd.

# LIGHTWEIGHT STEEL FRAMING
# MEMBER SELECTION TABLES (Metric)

**58M-2018-r1**
**June 2018**
**Revised July 2019**

**Prepared for:**
CANADIAN SHEET STEEL BUILDING INSTITUTE

**Prepared by:**
Prof. R.M. Schuster, P.Eng.
Distinguished Professor Emeritus, University of Waterloo

**Copyright © June 2018**
All rights reserved. This publication, nor any part thereof, may be reproduced in any form without the written permission of the publisher.

## PREFACE

The material presented has been prepared for the general information of the reader. While the material is believed to be technically correct and in accordance with recognized good practice at the time of publication it should not be used without first securing competent advice with respect to its suitability for any specific application. Neither the *Canadian Sheet Steel Building Institute,* its Members, nor Prof. Schuster warrant or assume any liability for the suitability of the material for any general or particular application.

Bailey Metal Products, Dass Metal Products, DCM Metal Corp., EB Métal Inc., Imperial Building Products, Manugypse, Groupe UP, Trebor Building Products Ltd.

# TABLE OF CONTENTS


***General Notes***

Introduction ..... **4**
Product Designator ..... **4**
Manufacturer Certification and Product Marking ..... **4**
Section Geometries ..... **5**
Section Properties ..... **6**
Symbols ..... **7**
Design Examples ..... **8**

***Section Properties***

Stud Section Properties ..... **13**
Joist Section Properties ..... **15**
Track Section Properties ..... **17**
***Curtain Wall Limiting Height Tables – Single and Double Spans*** ..... **20**
***Combined Axial and Lateral Load Tables*** ..... **37**
***Floor Joist Load Tables*** ..... **70**
***Header Load Tables*** ..... **79**
***Web Crippling Data*** ..... **84**
***S-Section Ceiling Span Tables*** ..... **87**
***U-Channel Section Properties*** ..... **88**
***U-Channel Ceiling Span Tables*** ..... **89**
***Furring Channel Section Properties*** ..... **90**
***Furring Channel Ceiling Span Tables*** ..... **91**


Bailey Metal Products, Dass Metal Products, DCM Metal Corp., EB Métal Inc., Imperial Building Products, Manugypse, Groupe UP, Trebor Building Products Ltd.

# GENERAL NOTES

## 1. INTRODUCTION

The technical data in this publication is intended as an aid to the design professional and should not be used to replace the judgement of a qualified Engineer or Architect.

## 2. PRODUCT DESIGNATOR

Lightweight steel framing manufacturers in Canada use a common designator method for identifying their products. The designator is a four-part code that identifies depth, flange width, member type and material thickness. This designator (based on Imperial units) is used for both SI metric and Imperial units.

**Example:** 600S162-54

Member depth in 1/100ths inches. Thus 600 means 600/100 = 6"

Flange width in 1/100ths inches. Thus 162 means 162/100 = 1.62" or 1-5/8"

600 S 162 - 54

Style:
S = Stud or joist sections
T = Track sections
U = Channel sections
F = Furring channel sections

Material thickness in 1/1000ths inches. Thus 54 means 54/1000 = 0.054"

## 3. MANUFACTURER CERTIFICATION AND PRODUCT MARKING

3.1 **Lightweight steel framing manufacturers who are members of the CSSBI and adhere to the *CSSBI Manufacturer Certification Requirements for Cold Formed Steel Framing Members* are the only companies that have authorization from the CSSBI to utilize these tables.**

Under the *CSSBI Manufacturer Certification Program*, a participating manufacturer certifies that the designated structural and non-structural cold formed steel (CFS) framing members

Bailey Metal Products, Dass Metal Products, DCM Metal Corp., EB Métal Inc., Imperial Building Products, Manugypse, Groupe UP, Trebor Building Products Ltd.

it produces meet or exceed the relevant ASTM International (ASTM), Canadian Standards Association (CSA) and American Iron and Steel Institute (AISI) standard requirements. The manufacturer's products are validated through an independent 3rd party review of the products and production practices, by appropriate testing and inspection.

3.2 **Marking:**
Individual products shall have a legible label, stencil, or embossment on the member with the following minimum information:
(a) Initials "CSSBI";
(b) Manufacturer's identification (2 or 3 letters);
(c) Designation steel thickness (in mils) exclusive of protective coatings; and,
(d) A reference number identifying the source coil.

*Example*: "CSSBI-XYZ-33 ABCD" would be a 33 mil thick product manufactured by XYZ company who is a CSSBI Manufacturer Member from a coil that can be traced through the reference number "ABCD".

Additional information may also be included at the discretion of the manufacturer.

## 4. SECTION GEOMETRIES

4.1 Section geometries are identified by the product designator method described in Section 2.

4.2 Stud, joist, track and bridging channel members shall be cold formed to shape from sheet steel with a minimum base steel thickness and inside bend radius as follows:

| Designation Thickness (mil) | Minimum Base Steel Thickness (mm) | Base Steel Design Thickness (mm) | Inside Bend Radius (mm) |
|---|---|---|---|
| 18 | 0.455 | 0.478 | 2.141 |
| 33 | 0.836 | 0.879 | 1.941 |
| 43 | 1.087 | 1.146 | 1.808 |
| 54 | 1.367 | 1.438 | 2.156 |
| 68 | 1.720 | 1.811 | 2.715 |
| 97 | 2.454 | 2.583 | 3.874 |

4.3 Stud and joist lip lengths are as follows:

| Section | Flange Width (mm) | Lip Length (mm) |
|---|---|---|
| S125 | 31.8 | 4.76 |
| S162 | 41.3 | 12.7 |
| S200 | 50.8 | 15.9 |
| S250 | 63.5 | 15.9 |

Bailey Metal Products, Dass Metal Products, DCM Metal Corp., EB Métal Inc., Imperial Building Products, Manugypse, Groupe UP, Trebor Building Products Ltd.

| | | |
|---|---|---|
| S300 | 76.2 | 15.9 |

## 5. SECTION PROPERTIES

5.1 Structural properties are based on Limit States Design (LSD) of the CSA Standard S136-16, *North American Specification for the Design of Cold-Formed Steel Structural Members*, 2016 edition (S136-16).

5.2 Steel shall conform to the requirements of S136-16, AISI S220-15 *North American Standard for Cold-Formed Steel Framing - Nonstructural Members* and AISI S240-15 *North American Standard for Cold-Formed Steel Structural Framing.* Products with a design thicknesses less than or equal to 1.146 mm shall have a minimum yield strength of 230 MPa and products with a design thicknesses equal to or greater than 1.438 mm shall have a minimum yield strength of 345 MPa.

5.3 Section properties are computed for the base steel design thicknesses (exclusive of coating) shown in the tables.

5.4 When provided, factory punchouts shall be located along the centreline of the webs of the members and shall have a minimum centre-to-centre spacing of 610 mm. Punchouts for members greater than 64 mm deep are a maximum of 38 mm wide by 114 mm in length. Any configuration or combination of holes that fit within the punchout width and length limitations stated above shall be permitted; other punchout configurations and locations not in compliance with the stated limitations must be approved by a design professional.

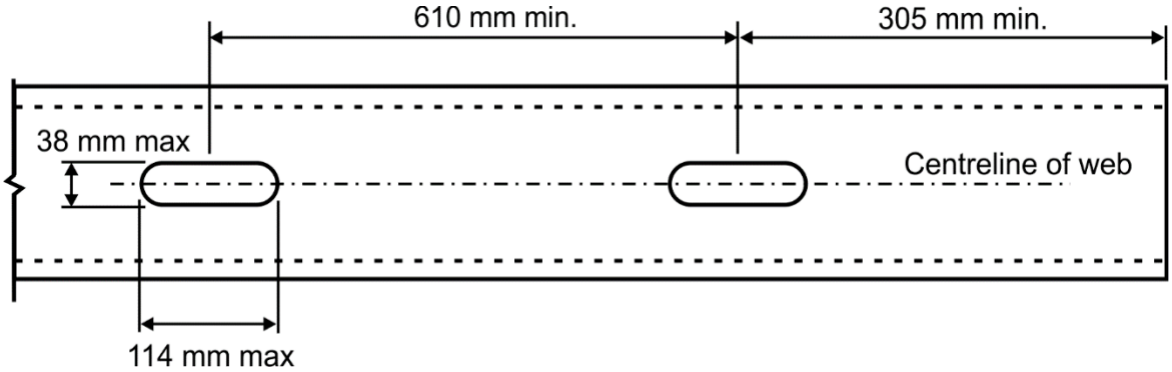


5.5 Increase in yield strength from cold work of forming has been included whenever applicable.

5.6 The effective moment of inertia for deflection, $I_{xd}$, is based on local buckling at an assumed specified live load stress of $0.6F_y$. This moment of inertia is only appropriate for checking serviceability limit states.

Bailey Metal Products, Dass Metal Products, DCM Metal Corp., EB Métal Inc., Imperial Building Products, Manugypse, Groupe UP, Trebor Building Products Ltd.

## 6. SYMBOLS

### Gross Properties

| | |
|---|---|
| $I_x$ | Moment of inertia about x-axis |
| $I_y$ | Moment of inertia about y-axis |
| $r_x$ | Radius of gyration about x-axis |
| $r_y$ | Radius of gyration about y-axis |
| $V_{rg}$ | Factored shear resistance along y-axis of unperforated section |

### Effective Properties

| | |
|---|---|
| $I_{xd}$ | Moment of inertia about x-axis for deflection calculations |
| $M_{rx}$ | Factored moment resistance for track, U-channel and furring channel sections based on local buckling |
| $M_{rxDB}$ | Factored moment resistance about x-axis based on distortional buckling, assuming $K_\phi = 0$ |
| $M_{rxLB}$ | Factored moment resistance about x-axis based on local buckling |
| $M_{ryDB}$ | Factored moment resistance about y-axis based on distortional buckling with lip in compression |
| $M_{ryLB}$ | Factored moment resistance about y-axis based on local buckling with web/lip in compression |
| $S_{xe}$ | Effective section modulus about x-axis |
| $V_{rn}$ | Factored shear resistance along y-axis of perforated section |

### Torsional and other Properties

| | |
|---|---|
| $\beta$ | $1 - (x_o/r_o)^2$ |
| $C_w$ | Torsional warping constant |
| $J$ | Saint-Venant torsion constant. |
| $L_u$ | Limiting unbraced length below which lateral-torsional buckling is not considered |
| $m$ | Distance from shear centre to mid-plane of web |
| $r_o$ | Polar radius of gyration about shear centre |
| $x_o$ | Distance from shear centre to centroid along principle x-axis |

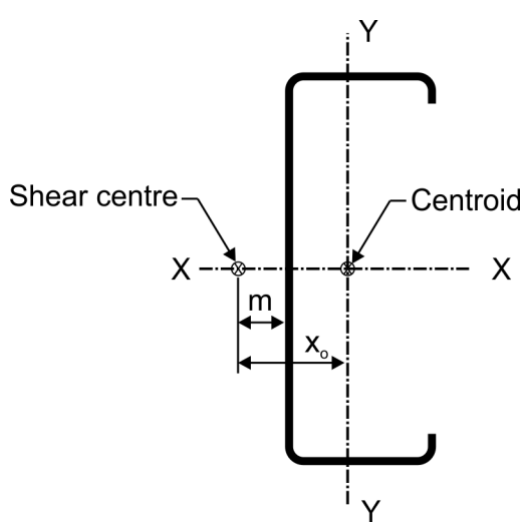


Bailey Metal Products, Dass Metal Products, DCM Metal Corp., EB Métal Inc., Imperial Building Products, Manugypse, Groupe UP, Trebor Building Products Ltd.

**Web Depth to Thickness Ratio (h/t)**

| Designation Thickness (mil) | 18 | | 33 | | 43 | | 54 | | 68 | | 97 | |
|---|---|---|---|---|---|---|---|---|---|---|---|---|
| Base Design Thickness (mm) | 0.478 | | 0.879 | | 1.146 | | 1.438 | | 1.811 | | 2.583 | |
| Section Depth (mm) | h(mm) | h/t | h(mm) | h/t | h(mm) | h/t | h(mm) | h/t | h(mm) | h/t | h(mm) | h/t |
| 41.3 | 36.1 | 75.5 | | | | | | | | | | |
| 63.5 | 58.2 | 122 | | | | | | | | | | |
| 92.1 | 86.9 | 182 | 86.4 | 98.3 | 86.1 | 75.2 | 84.8 | 59.0 | 83.1 | 45.8 | 79.2 | 30.6 |
| 102 | 96.3 | 202[1] | 96.0 | 109 | 95.8 | 83.5 | 94.5 | 65.7 | 92.5 | 51.1 | 88.6 | 34.3 |
| 152 | 147 | * | 147 | 167 | 147 | 128 | 145 | 101 | 143 | 79.2 | 139 | 54.0 |
| 203 | | | 198 | 225[1] | 197 | 172 | 196 | 136 | 194 | 107 | 190 | 73.7 |
| 254 | | | 248 | * | 248 | 217[1] | 247 | 172 | 245 | 135 | 241 | 93.3 |
| 305 | | | 299 | * | 299 | * | 298 | 207[1] | 296 | 163 | 292 | 113 |
| 356 | | | 350 | * | 350 | * | 348 | 242[1] | 346 | 191 | 343 | 133 |

[1] h/t exceeds 200; * h/t exceeds 260

## *7. DESIGN EXAMPLES*

### 7.1 LOAD BEARING WALL STUDS – Concentric load only

***Given:***

Specified (unfactored) Loads: Axial live load (L) = 20.5 kN/stud
Axial dead load (D) = 9.0 kN/stud

Stud height = 4.4 m
Stud spacing = 406 mm o.c.
Assume studs are braced by bridging only
Select a stud section

***Solution:***

Factored load combination = 1.25D + 1.5L
$C_f$ = 1.25(9.0) + 1.5(20.5) = *42.0 kN/stud*

Try 600S162-68 studs at 406 mm o.c.

From Combined Axial and Lateral Load table, the limiting factored compressive resistance for 0 kPa factored lateral load
$C_r$ = *45.5 kN/stud*
Since $C_r$ = *45.5 kN/stud* > $C_f$ = *42.0 kN/stud* ∴ **OK**

***Conclusion:***

Use ***600S162-68*** section spaced at 406 mm o.c. with 3 bridging lines arranged so that the maximum spacing does not exceed 1.22 m o.c.

Bailey Metal Products, Dass Metal Products, DCM Metal Corp., EB Métal Inc., Imperial Building Products, Manugypse, Groupe UP, Trebor Building Products Ltd.

## 7.2 LOAD BEARING WALL STUDS – Combined loading

***Given:***

Specified (unfactored) Loads: Axial live load (L) = 15.0 kN/stud
Axial dead load (D) = 8.0 kN/stud
Wind load (W) = 1.25 kPa

Stud height = 3.2 m
Stud spacing = 406 mm o.c.
Deflection limit = L/600
Assume studs are braced by bridging only
Select a stud section

***Solution:***

Try 600S162-54 studs at 406 mm o.c.

***1) Dead load only***

Factored load combination = 1.4D
$C_f$ (factored axial load) = 1.4D = 1.4(8.0) = *11.2 kN/stud*
From Combined Axial and Lateral Load table, the limiting factored compressive resistance for 0 kPa factored lateral load
$C_r$ = *36.6 kN/stud*
Since $C_r$ = *36.6 kN/stud* > $C_f$ = *11.2 kN/stud* ∴ **OK**

***2) Dead + Wind + Live Load***

a) Factored load combination # 1 = 1.25D + 1.5L + 0.4W
$W_f$ (factored wind load) = 0.4W
= 0.4(1.25) = *0.5 kPa*
$C_f$ (factored axial load) = 1.25D + 1.5L
= 1.25(8.0) + 1.5(15.0)
= *32.5 kN/stud*

From Combined Axial and Lateral Load table, the limiting factored compressive resistance for 0.50 kPa factored lateral load
$C_r$ = *33.7 kN/stud*
Since $C_r$ = *33.7 kN/stud* > $C_f$ = *32.5 kN/stud* ∴ **OK**

b) Factored load combination # 2 = 1.25D + 0.5L + 1.4W
$W_f$ (factored wind load) = 1.4W
= 1.4(1.25) = *1.75 kPa*
$C_f$ (factored axial load) = 1.25D + 0.5L
= 1.25(8.0) + 0.5(15.0)
= *17.5 kN/stud*

From Combined Axial and Lateral Load table, the limiting factored compressive resistance for 1.5 kPa and 2.0 kPa factored lateral load
$C_r$ = *28.0 kN/stud* (for 1.5 kPa)
$C_r$ = *25.3 kN/stud* (for 2.0 kPa)

By interpolation for 1.75 kPa, $C_r$ = *26.7 kN/stud* > *17.5 kN/stud* ∴ **OK**

Bailey Metal Products, Dass Metal Products, DCM Metal Corp., EB Métal Inc., Imperial Building Products, Manugypse, Groupe UP, Trebor Building Products Ltd.

***3) Web crippling check***

From Single Span Curtain Wall Limiting Heights table for a 1.25 kPa specified wind load, web crippling does not control.

***4) Deflection check (L/600)***

From Single Span Curtain Wall Limiting Heights table, the limiting stud height for a specified wind load of 1.25 kPa and a deflection limit of L/600 is 4.3 m.
Since 4.3 m > 3.2 m **∴ OK**

***Conclusion:***

Use ***600S162-54*** section spaced at 406 mm o.c. with 2 bridging lines arranged so that the maximum spacing does not exceed 1.22 m o.c.

## 7.3 FLOOR JOIST – Single span

***Given:***

Specified (unfactored) Loads: Live load (L) = 2.0 kPa
Dead load (D) = 0.70 kPa

Single span length = 4.8 m
Joist spacing = 406 mm o.c.
Deflection limit = L/360
Select a joist section

***Solution:***

Strength

Factored load combination = 1.25D + 1.5L
$P_f$ = 1.25(0.70) + 1.5(2.0) = 3.88 kPa

Try 800S162-54 joists at 406 mm o.c.

From Floor Joist Load table, the factored uniformly distributed single span Strength Resistance = 4.5 kPa
Since *4.5 kPa* > *3.88 kPa* **∴ OK**

Deflection

From Floor Joist Load table, the specified uniformly distributed single span L/360 deflection load is 2.2 kPa
Since *2.2 kPa* > *2.0 kPa* **∴ OK**

***Conclusion:***

Use ***800S162-54*** section spaced at 406 mm o.c.
Web stiffeners are not required based on an end bearing length of 89 mm. If end bearing length is less than 89 mm, web crippling must be checked.

## 7.4 CURTAIN WALL – Single span

***Given:***

Specified (unfactored) wind load = 1.5 kPa
Stud height = 3.5 m
Stud spacing = 610 mm o.c.
Deflection limit = L/360
Select a stud section

Bailey Metal Products, Dass Metal Products, DCM Metal Corp., EB Métal Inc., Imperial Building Products, Manugypse, Groupe UP, Trebor Building Products Ltd.

***Solution:***

Try 600S162-43 studs at 610 mm o.c.

From Single Span Curtain Wall Limiting Heights table under 1.5 kPa specified wind load, the limiting stud height is 3.7 m

Since *3.7 m* > *3.5 m* **∴ OK**

***Conclusion:***

Use ***600S162-43*** section spaced at 610 mm o.c. Web stiffeners are not required.

## 7.5 CURTAIN WALL – Double span

***Given:***

Specified (unfactored) wind load = 2.5 kPa
Stud height = 3 m
Stud spacing = 610 mm o.c.
Deflection limit = L/360
Select a stud section

***Solution:***

Try 800S162-43 studs at 610 mm o.c.

From Double Span Curtain Wall Limiting Heights table under 2.5 kPa specified wind load, the limiting stud height is 3.1a m

Since *3.1 m* > *3 m* **∴ OK**

***Conclusion:***

Use ***800S162-43*** section spaced at 610 mm o.c. Web stiffeners are required at end and interior supports.

## 7.6 USE OF WEB CRIPPLING DATA TABLE – Single Web Member

***Given:***

Single web C-section
Depth = 203 mm
Designation thickness = 54 mil; Base Design Thickness, t = 1.438 mm
Bearing length, N = 75 mm
*Determine the factored end-one-flange (EOF) web crippling resistance.*

***Solution:***

From the Factored Web Crippling Data table for Single Web Members

$P_{eo1}$ = 1.36 kN; $P_{eo2}$ = 0.48 kN

$$P_{rEOF} = P_{eo1} + P_{eo2}\sqrt{\frac{N}{t}} = 1.36 + 0.48\sqrt{\frac{75}{1.438}} = \underline{4.83\,kN}$$

***Conclusion:***

The factored end-one-flange (EOF) web crippling resistance, $P_{rEOF}$ = ***4.83 kN***

Bailey Metal Products, Dass Metal Products, DCM Metal Corp., EB Métal Inc., Imperial Building Products, Manugypse, Groupe UP, Trebor Building Products Ltd.

## Stud Section Properties

**Table Notes**

1 Inside bend radius values are shown in the General Notes.
2 Gross section properties are based on the full-unreduced cross section of the stud sections, away from the punchouts.
3 The factored moment resistance for design is based on the lesser of local and distortional buckling. Distortional buckling is based on an assumed rotational stiffness of $K_\varphi = 0$.

| | | | | GROSS | | | | | | | PERFORATED EFFECTIVE | | | | | | | | TORSIONAL | | | | | | |
|---|---|---|---|---|---|---|---|---|---|---|---|---|---|---|---|---|---|---|---|---|---|---|---|---|---|
| Stud Designation | Lip (mm) | Base Design Thickness (mm) | $F_y$ (MPa) | Mass (Kg/m) | Area (E+03) ($mm^2$) | $I_x$ (E+06) ($mm^4$) | $r_x$ (mm) | $I_y$ (E+06) ($mm^4$) | $r_y$ (mm) | $V_{rg}$ (kN) | $I_{xd}$ (E+06) ($mm^4$) | $S_{xe}$ (E+03) ($mm^3$) | $M_{rxLB}$ (kN-m) | $M_{rxDB}$ (kN-m) | $V_{rn}$ (kN) | $M_{ryLB}$ web comp. (kN-m) | $M_{ryLB}$ lip comp. (kN-m) | $M_{ryDB}$ lip comp. (kN-m) | J ($mm^4$) | $C_w$ (E+06) ($mm^6$) | $x_o$ (mm) | m (mm) | $r_o$ (mm) | ß | $L_u$ (mm) |
| 162S125-18 | 4.78 | 0.478 | 230 | 0.406 | 0.0517 | 0.0157 | 17.4 | 0.00666 | 11.4 | 1.72 | 0.0137 | 0.503 | 0.103 | 0.0977 | 0.565 | 0.0591 | 0.0601 | 0.0501 | 3.93 | 2.47 | 26.1 | 15.1 | 33.4 | 0.388 | 737 |
| 162S125-33 | 4.78 | 0.879 | 230 | 0.737 | 0.0937 | 0.0279 | 17.2 | 0.0117 | 11.2 | 3.42 | 0.0275 | 1.13 | 0.232 | 0.216 | 0.596 | 0.105 | 0.105 | 0.112 | 24.1 | 4.21 | 25.7 | 14.8 | 32.9 | 0.391 | 742 |
| 250S125-18 | 4.78 | 0.478 | 230 | 0.490 | 0.0623 | 0.0413 | 25.8 | 0.00774 | 11.2 | 1.46 | 0.0366 | 0.973 | 0.199 | 0.156 | 1.11 | 0.0608 | 0.0675 | 0.0516 | 4.74 | 6.27 | 23.0 | 13.8 | 36.2 | 0.599 | 734 |
| 250S125-33 | 4.78 | 0.879 | 230 | 0.890 | 0.113 | 0.0740 | 25.6 | 0.0136 | 10.9 | 5.55 | 0.0728 | 2.05 | 0.421 | 0.357 | 2.27 | 0.116 | 0.118 | 0.116 | 29.2 | 10.8 | 22.5 | 13.5 | 35.8 | 0.605 | 732 |
| 250S125-43 | 4.78 | 1.146 | 230 | 1.15 | 0.146 | 0.0948 | 25.5 | 0.0172 | 10.8 | 7.21 | 0.0938 | 2.89 | 0.592 | 0.507 | 2.25 | 0.149 | 0.149 | 0.158 | 64.1 | 13.5 | 22.2 | 13.3 | 35.5 | 0.608 | 732 |
| 362S125-18 | 4.78 | 0.478 | 230 | 0.597 | 0.0760 | 0.0973 | 35.8 | 0.00870 | 10.7 | 0.983 | 0.0873 | 1.22 | 0.251 | 0.234 | 0.930 | 0.0610 | 0.0694 | 0.0537 | 5.77 | 14.5 | 20.0 | 12.4 | 42.3 | 0.778 | 732 |
| 362S125-33 | 4.78 | 0.879 | 230 | 1.09 | 0.138 | 0.175 | 35.6 | 0.0152 | 10.5 | 5.82 | 0.172 | 2.98 | 0.610 | 0.552 | 2.97 | 0.117 | 0.122 | 0.122 | 35.6 | 25.2 | 19.5 | 12.2 | 41.9 | 0.783 | 724 |
| 362S125-43 | 4.78 | 1.146 | 230 | 1.41 | 0.179 | 0.225 | 35.4 | 0.0193 | 10.4 | 9.89 | 0.223 | 4.40 | 0.901 | 0.797 | 3.84 | 0.152 | 0.154 | 0.165 | 78.4 | 31.6 | 19.3 | 12.0 | 41.6 | 0.786 | 721 |
| 362S125-54 | 4.78 | 1.438 | 345 | 1.74 | 0.222 | 0.275 | 35.2 | 0.0230 | 10.2 | 19.2 | 0.273 | 5.26 | 1.63 | 1.41 | 5.78 | 0.275 | 0.277 | 0.297 | 153 | 38.1 | 18.9 | 11.8 | 41.2 | 0.790 | 579 |
| 362S162-33 | 12.7 | 0.879 | 230 | 1.33 | 0.169 | 0.229 | 36.8 | 0.0413 | 15.6 | 5.82 | 0.229 | 4.39 | 0.898 | 0.880 | 2.97 | 0.269 | 0.286 | 0.298 | 43.5 | 79.7 | 33.2 | 20.0 | 52.0 | 0.592 | 1082 |
| 362S162-43 | 12.7 | 1.146 | 230 | 1.72 | 0.219 | 0.296 | 36.7 | 0.0528 | 15.5 | 9.89 | 0.296 | 6.10 | 1.25 | 1.23 | 3.84 | 0.354 | 0.365 | 0.391 | 95.9 | 101 | 32.9 | 19.9 | 51.7 | 0.594 | 1080 |
| 362S162-54 | 12.7 | 1.438 | 345 | 2.14 | 0.272 | 0.363 | 36.5 | 0.0642 | 15.3 | 19.2 | 0.363 | 7.26 | 2.25 | 2.18 | 5.78 | 0.653 | 0.671 | 0.720 | 188 | 123 | 32.6 | 19.7 | 51.3 | 0.597 | 874 |
| 362S162-68 | 12.7 | 1.811 | 345 | 2.65 | 0.338 | 0.445 | 36.3 | 0.0774 | 15.1 | 24.9 | 0.445 | 9.41 | 2.92 | 2.87 | 5.72 | 0.804 | 0.806 | 0.867 | 369 | 148 | 32.1 | 19.4 | 50.8 | 0.600 | 874 |
| 362S162-97 | 12.7 | 2.583 | 345 | 3.67 | 0.467 | 0.597 | 35.8 | 0.100 | 14.7 | 33.8 | 0.597 | 12.7 | 4.68* | 4.68 | 4.98 | 1.04 | 1.04 | 1.12 | 1039 | 194 | 31.1 | 18.9 | 49.6 | 0.606 | 800 |
| 362S200-33 | 15.9 | 0.879 | 230 | 1.50 | 0.191 | 0.270 | 37.5 | 0.0736 | 19.6 | 5.82 | 0.265 | 4.82 | 0.986 | 1.01 | 2.97 | 0.405 | 0.416 | 0.428 | 49.3 | 155 | 44.2 | 26.2 | 61.2 | 0.478 | 1359 |
| 362S200-43 | 15.9 | 1.146 | 230 | 1.95 | 0.248 | 0.348 | 37.4 | 0.0944 | 19.5 | 9.89 | 0.348 | 6.99 | 1.43 | 1.42 | 3.84 | 0.535 | 0.556 | 0.597 | 109 | 197 | 43.9 | 26.0 | 60.9 | 0.480 | 1359 |
| 362S200-54 | 15.9 | 1.438 | 345 | 2.42 | 0.309 | 0.429 | 37.3 | 0.115 | 19.3 | 19.2 | 0.429 | 8.01 | 2.49 | 2.51 | 5.78 | 0.994 | 1.03 | 1.06 | 213 | 240 | 43.6 | 25.8 | 60.5 | 0.482 | 1100 |
| 362S200-68 | 15.9 | 1.811 | 345 | 3.01 | 0.384 | 0.527 | 37.0 | 0.140 | 19.1 | 24.9 | 0.527 | 10.9 | 3.39 | 3.33 | 5.72 | 1.24 | 1.25 | 1.34 | 420 | 292 | 43.1 | 25.6 | 59.9 | 0.484 | 1100 |
| 362S200-97 | 15.9 | 2.583 | 345 | 4.18 | 0.533 | 0.713 | 36.6 | 0.186 | 18.7 | 33.8 | 0.712 | 15.2 | 5.43* | 5.45 | 4.98 | 1.63 | 1.63 | 1.77 | 1185 | 387 | 42.1 | 25.0 | 58.8 | 0.487 | 1026 |
| 362S250-33 | 15.9 | 0.879 | 230 | 1.68 | 0.214 | 0.316 | 38.5 | 0.125 | 24.2 | 5.82 | 0.298 | 5.16 | 1.06 | 1.08 | 2.97 | 0.557 | 0.576 | 0.529 | 55.0 | 259 | 56.2 | 32.6 | 72.2 | 0.395 | 1628 |
| 362S250-43 | 15.9 | 1.146 | 230 | 2.18 | 0.277 | 0.408 | 38.4 | 0.160 | 24.0 | 9.89 | 0.405 | 7.36 | 1.51 | 1.54 | 3.84 | 0.738 | 0.768 | 0.749 | 121 | 330 | 55.9 | 32.4 | 71.9 | 0.396 | 1628 |
| 362S250-54 | 15.9 | 1.438 | 345 | 2.71 | 0.345 | 0.504 | 38.2 | 0.197 | 23.9 | 19.2 | 0.483 | 8.42 | 2.61 | 2.69 | 5.78 | 1.38 | 1.43 | 1.32 | 238 | 404 | 55.5 | 32.2 | 71.5 | 0.397 | 1318 |
| 362S250-68 | 15.9 | 1.811 | 345 | 3.37 | 0.430 | 0.620 | 38.0 | 0.240 | 23.6 | 24.9 | 0.614 | 11.3 | 3.50 | 3.59 | 5.72 | 1.72 | 1.74 | 1.76 | 470 | 493 | 55.0 | 32.0 | 70.9 | 0.398 | 1321 |
| 362S250-97 | 15.9 | 2.583 | 345 | 4.70 | 0.598 | 0.844 | 37.6 | 0.322 | 23.2 | 33.8 | 0.844 | 17.1 | 5.98* | 5.50 | 4.98 | 2.30 | 2.30 | 2.52 | 1331 | 658 | 54.0 | 31.5 | 69.7 | 0.401 | 1252 |
| 362S300-33 | 15.9 | 0.879 | 230 | 1.85 | 0.236 | 0.363 | 39.2 | 0.193 | 28.6 | 5.82 | 0.325 | 5.37 | 1.10 | 1.13 | 2.97 | 0.728 | 0.756 | 0.626 | 60.8 | 397 | 68.2 | 39.0 | 83.7 | 0.336 | 1885 |
| 362S300-43 | 15.9 | 1.146 | 230 | 2.41 | 0.307 | 0.468 | 39.1 | 0.248 | 28.4 | 9.89 | 0.441 | 7.52 | 1.54 | 1.62 | 3.84 | 0.966 | 1.01 | 0.894 | 134 | 507 | 67.9 | 38.9 | 83.4 | 0.336 | 1887 |
| 362S300-54 | 15.9 | 1.438 | 345 | 3.00 | 0.382 | 0.579 | 38.9 | 0.305 | 28.3 | 19.2 | 0.525 | 8.66 | 2.69 | 2.82 | 5.78 | 1.81 | 1.87 | 1.57 | 263 | 622 | 67.5 | 38.7 | 82.9 | 0.337 | 1529 |
| 362S300-68 | 15.9 | 1.811 | 345 | 3.74 | 0.476 | 0.714 | 38.7 | 0.375 | 28.1 | 24.9 | 0.675 | 11.7 | 3.64 | 3.81 | 5.72 | 2.27 | 2.29 | 2.12 | 520 | 761 | 67.1 | 38.4 | 82.4 | 0.337 | 1532 |
| 362S300-97 | 15.9 | 2.583 | 345 | 5.21 | 0.664 | 0.975 | 38.3 | 0.505 | 27.6 | 33.8 | 0.960 | 18.8 | 5.84 | 5.91 | 4.98 | 3.07 | 3.07 | 3.27 | 1477 | 1021 | 66.0 | 37.9 | 81.2 | 0.338 | 1544 |
| 400S125-18 | 4.78 | 0.478 | 230 | 0.632 | 0.081 | 0.123 | 39.0 | 0.00891 | 10.5 | 0.885 | 0.110 | 1.36 | 0.278 | 0.261 | 0.885 | 0.061 | 0.0710 | 0.0543 | 6.12 | 18.1 | 19.2 | 12.1 | 44.7 | 0.817 | 729 |
| 400S125-33 | 4.78 | 0.879 | 230 | 1.15 | 0.147 | 0.221 | 38.8 | 0.0157 | 10.3 | 5.54 | 0.217 | 3.32 | 0.681 | 0.619 | 3.38 | 0.118 | 0.125 | 0.123 | 37.8 | 31.6 | 18.7 | 11.8 | 44.3 | 0.821 | 721 |
| 400S125-43 | 4.78 | 1.146 | 230 | 1.49 | 0.190 | 0.284 | 38.7 | 0.0198 | 10.2 | 9.89 | 0.281 | 4.94 | 1.01 | 0.897 | 4.61 | 0.154 | 0.158 | 0.166 | 83.2 | 39.7 | 18.5 | 11.7 | 44.0 | 0.824 | 716 |
| 400S125-54 | 4.78 | 1.438 | 345 | 1.85 | 0.236 | 0.348 | 38.4 | 0.0236 | 10.0 | 19.2 | 0.344 | 5.91 | 1.83 | 1.59 | 6.96 | 0.278 | 0.284 | 0.301 | 162 | 47.9 | 18.1 | 11.5 | 43.6 | 0.828 | 577 |
| 400S162-33 | 12.7 | 0.879 | 230 | 1.39 | 0.177 | 0.288 | 40.3 | 0.0427 | 15.5 | 5.54 | 0.288 | 4.89 | 1.00 | 0.984 | 3.38 | 0.270 | 0.293 | 0.302 | 45.7 | 97.4 | 32.1 | 19.5 | 53.8 | 0.644 | 1074 |
| 400S162-43 | 12.7 | 1.146 | 230 | 1.81 | 0.230 | 0.371 | 40.2 | 0.0546 | 15.4 | 9.89 | 0.371 | 6.83 | 1.40 | 1.39 | 4.61 | 0.356 | 0.374 | 0.395 | 101 | 123 | 31.8 | 19.3 | 53.5 | 0.647 | 1069 |
| 400S162-54 | 12.7 | 1.438 | 345 | 2.24 | 0.286 | 0.457 | 40.0 | 0.0663 | 15.2 | 19.2 | 0.457 | 8.15 | 2.53 | 2.45 | 6.96 | 0.658 | 0.687 | 0.728 | 197 | 150 | 31.4 | 19.2 | 53.1 | 0.649 | 864 |
| 400S162-68 | 12.7 | 1.811 | 345 | 2.79 | 0.355 | 0.560 | 39.7 | 0.0800 | 15.0 | 27.7 | 0.560 | 10.6 | 3.30 | 3.24 | 7.72 | 0.815 | 0.825 | 0.877 | 388 | 182 | 31.0 | 18.9 | 52.6 | 0.653 | 864 |
| 400S162-97 | 12.7 | 2.583 | 345 | 3.86 | 0.492 | 0.755 | 39.2 | 0.104 | 14.5 | 37.9 | 0.755 | 14.6 | 5.38* | 5.38 | 6.87 | 1.06 | 1.06 | 1.14 | 1094 | 239 | 30.0 | 18.4 | 51.5 | 0.660 | 790 |
| 400S200-33 | 15.9 | 0.879 | 230 | 1.57 | 0.200 | 0.338 | 41.1 | 0.0762 | 19.5 | 5.54 | 0.332 | 5.38 | 1.10 | 1.13 | 3.38 | 0.406 | 0.426 | 0.432 | 51.4 | 187 | 42.9 | 25.6 | 62.5 | 0.530 | 1349 |
| 400S200-43 | 15.9 | 1.146 | 230 | 2.03 | 0.259 | 0.436 | 41.0 | 0.0977 | 19.4 | 9.89 | 0.436 | 7.83 | 1.60 | 1.59 | 4.61 | 0.539 | 0.569 | 0.601 | 113 | 238 | 42.6 | 25.4 | 62.2 | 0.532 | 1346 |
| 400S200-54 | 15.9 | 1.438 | 345 | 2.53 | 0.322 | 0.538 | 40.8 | 0.120 | 19.3 | 19.2 | 0.538 | 8.98 | 2.79 | 2.81 | 6.96 | 1.00 | 1.05 | 1.07 | 222 | 291 | 42.2 | 25.2 | 61.8 | 0.534 | 1090 |
| 400S200-68 | 15.9 | 1.811 | 345 | 3.15 | 0.401 | 0.662 | 40.6 | 0.145 | 19.1 | 27.7 | 0.661 | 12.3 | 3.81 | 3.74 | 7.72 | 1.25 | 1.28 | 1.37 | 439 | 354 | 41.7 | 25.0 | 61.3 | 0.536 | 1090 |
| 400S200-97 | 15.9 | 2.583 | 345 | 4.37 | 0.557 | 0.897 | 40.1 | 0.193 | 18.6 | 37.9 | 0.897 | 17.4 | 6.23* | 6.23 | 6.87 | 1.68 | 1.68 | 1.80 | 1240 | 470 | 40.8 | 24.5 | 60.1 | 0.541 | 1013 |
| 400S250-33 | 15.9 | 0.879 | 230 | 1.74 | 0.222 | 0.395 | 42.2 | 0.129 | 24.1 | 5.54 | 0.372 | 5.76 | 1.18 | 1.20 | 3.38 | 0.559 | 0.591 | 0.532 | 57.2 | 313 | 54.6 | 32.0 | 73.1 | 0.441 | 1618 |
| 400S250-43 | 15.9 | 1.146 | 230 | 2.26 | 0.288 | 0.509 | 42.0 | 0.166 | 24.0 | 9.89 | 0.506 | 8.23 | 1.69 | 1.71 | 4.61 | 0.743 | 0.787 | 0.752 | 126 | 399 | 54.3 | 31.8 | 72.8 | 0.443 | 1615 |
| 400S250-54 | 15.9 | 1.438 | 345 | 2.82 | 0.359 | 0.629 | 41.9 | 0.204 | 23.8 | 19.2 | 0.603 | 9.43 | 2.93 | 2.99 | 6.96 | 1.39 | 1.46 | 1.33 | 247 | 489 | 53.9 | 31.6 | 72.3 | 0.444 | 1308 |
| 400S250-68 | 15.9 | 1.811 | 345 | 3.51 | 0.447 | 0.776 | 41.7 | 0.249 | 23.6 | 27.7 | 0.767 | 12.7 | 3.94 | 4.02 | 7.72 | 1.74 | 1.78 | 1.77 | 489 | 598 | 53.5 | 31.4 | 71.8 | 0.445 | 1311 |
| 400S250-97 | 15.9 | 2.583 | 345 | 4.89 | 0.623 | 1.06 | 41.2 | 0.334 | 23.1 | 37.9 | 1.06 | 19.5 | 6.80* | 6.19 | 6.87 | 2.37 | 2.37 | 2.55 | 1385 | 800 | 52.5 | 30.8 | 70.6 | 0.448 | 1240 |
| 400S300-33 | 15.9 | 0.879 | 230 | 1.92 | 0.244 | 0.451 | 43.0 | 0.200 | 28.6 | 5.54 | 0.406 | 5.99 | 1.23 | 1.24 | 3.38 | 0.731 | 0.776 | 0.628 | 62.9 | 479 | 66.6 | 38.4 | 84.2 | 0.375 | 1877 |
| 400S300-43 | 15.9 | 1.146 | 230 | 2.49 | 0.317 | 0.583 | 42.8 | 0.257 | 28.4 | 9.89 | 0.550 | 8.41 | 1.72 | 1.79 | 4.61 | 0.972 | 1.03 | 0.898 | 139 | 613 | 66.2 | 38.2 | 83.9 | 0.376 | 1877 |
| 400S300-54 | 15.9 | 1.438 | 345 | 3.10 | 0.395 | 0.721 | 42.7 | 0.316 | 28.3 | 19.2 | 0.654 | 9.69 | 3.01 | 3.14 | 6.96 | 1.82 | 1.92 | 1.58 | 272 | 752 | 65.9 | 38.0 | 83.4 | 0.377 | 1519 |
| 400S300-68 | 15.9 | 1.811 | 345 | 3.87 | 0.493 | 0.891 | 42.5 | 0.388 | 28.1 | 27.7 | 0.842 | 13.2 | 4.09 | 4.24 | 7.72 | 2.30 | 2.35 | 2.14 | 539 | 922 | 65.4 | 37.7 | 82.9 | 0.378 | 1521 |
| 400S300-97 | 15.9 | 2.583 | 345 | 5.40 | 0.689 | 1.22 | 42.1 | 0.524 | 27.6 | 37.9 | 1.20 | 21.4 | 6.64 | 6.61 | 6.87 | 3.15 | 3.15 | 3.29 | 1531 | 1240 | 64.4 | 37.2 | 81.7 | 0.379 | 1532 |

* Cold work of forming applies

Bailey Metal Products, Dass Metal Products, DCM Metal Corp., EB Métal Inc., Imperial Building Products, Manugypse, Groupe UP, Trebor Building Products Ltd.

| | | | | GROSS | | | | | | | PERFORATED EFFECTIVE | | | | | | | | TORSIONAL | | | | | | |
|---|---|---|---|---|---|---|---|---|---|---|---|---|---|---|---|---|---|---|---|---|---|---|---|---|---|
| Stud Designation | Lip (mm) | Base Design Thickness (mm) | $F_y$ (MPa) | Mass (Kg/m) | Area (E+03) ($mm^2$) | $I_x$ (E+06) ($mm^4$) | $r_x$ (mm) | $I_y$ (E+06) ($mm^4$) | $r_y$ (mm) | $V_{rg}$ (kN) | $I_{xd}$ (E+06) ($mm^4$) | $S_{xe}$ (E+03) ($mm^3$) | $M_{rxLB}$ (kN-m) | $M_{rxDB}$ (kN-m) | $V_{rn}$ (kN) | $M_{ryLB}$ web comp. (kN-m) | $M_{ryLB}$ lip comp. (kN-m) | $M_{ryDB}$ lip comp. (kN-m) | J ($mm^4$) | $C_w$ (E+06) ($mm^6$) | $x_o$ (mm) | m (mm) | $r_o$ (mm) | ß | $L_u$ (mm) |
| 600S125-33 | 4.78 | 0.879 | 230 | 1.50 | 0.191 | 0.587 | 55.4 | 0.0173 | 9.53 | 3.63 | 0.560 | 6.05 | 1.24 | 0.972 | 3.63 | 0.120 | 0.133 | 0.128 | 49.3 | 80.6 | 15.4 | 10.1 | 58.3 | 0.930 | 699 |
| 600S125-43 | 4.78 | 1.146 | 230 | 1.95 | 0.248 | 0.756 | 55.2 | 0.0219 | 9.40 | 8.04 | 0.747 | 9.08 | 1.86 | 1.43 | 7.05 | 0.157 | 0.168 | 0.173 | 109 | 102 | 15.2 | 9.98 | 58.0 | 0.931 | 693 |
| 600S125-54 | 4.78 | 1.438 | 345 | 2.42 | 0.309 | 0.931 | 54.9 | 0.0261 | 9.19 | 16.0 | 0.922 | 11.0 | 3.42 | 2.59 | 11.1 | 0.285 | 0.304 | 0.312 | 213 | 123 | 14.9 | 9.80 | 57.6 | 0.933 | 556 |
| 600S162-33 | 12.7 | 0.879 | 230 | 1.74 | 0.222 | 0.746 | 58.0 | 0.0484 | 14.8 | 3.63 | 0.746 | 9.46 | 1.94 | 1.55 | 3.63 | 0.273 | 0.313 | 0.322 | 57.2 | 231 | 27.2 | 17.2 | 65.7 | 0.828 | 1044 |
| 600S162-43 | 12.7 | 1.146 | 230 | 2.26 | 0.288 | 0.964 | 57.8 | 0.0618 | 14.6 | 8.04 | 0.964 | 12.6 | 2.84* | 2.20 | 7.05 | 0.362 | 0.400 | 0.411 | 126 | 294 | 27.0 | 17.0 | 65.5 | 0.830 | 988 |
| 600S162-54 | 12.7 | 1.438 | 345 | 2.82 | 0.359 | 1.19 | 57.6 | 0.0751 | 14.5 | 16.0 | 1.19 | 15.0 | 5.15* | 3.91 | 11.1 | 0.670 | 0.737 | 0.757 | 247 | 359 | 26.6 | 16.8 | 65.1 | 0.833 | 795 |
| 600S162-68 | 12.7 | 1.811 | 345 | 3.51 | 0.447 | 1.47 | 57.3 | 0.0907 | 14.2 | 30.4 | 1.47 | 19.1 | 6.70* | 5.28 | 16.4 | 0.836 | 0.889 | 0.914 | 489 | 437 | 26.2 | 16.6 | 64.6 | 0.835 | 782 |
| 600S162-97 | 12.7 | 2.583 | 345 | 4.89 | 0.623 | 2.00 | 56.6 | 0.118 | 13.8 | 59.6 | 2.00 | 26.2 | 9.64* | 8.07 | 21.7 | 1.13 | 1.15 | 1.19 | 1385 | 578 | 25.3 | 16.2 | 63.5 | 0.841 | 754 |
| 600S200-33 | 15.9 | 0.879 | 230 | 1.92 | 0.244 | 0.864 | 59.4 | 0.087 | 18.9 | 3.63 | 0.850 | 10.2 | 2.08 | 1.77 | 3.63 | 0.410 | 0.459 | 0.449 | 62.9 | 428 | 37.0 | 22.9 | 72.5 | 0.740 | 1311 |
| 600S200-43 | 15.9 | 1.146 | 230 | 2.49 | 0.317 | 1.12 | 59.3 | 0.112 | 18.8 | 8.04 | 1.12 | 14.3 | 2.93 | 2.52 | 7.05 | 0.547 | 0.613 | 0.626 | 139 | 546 | 36.7 | 22.7 | 72.2 | 0.742 | 1306 |
| 600S200-54 | 15.9 | 1.438 | 345 | 3.10 | 0.395 | 1.38 | 59.1 | 0.137 | 18.6 | 16.0 | 1.38 | 16.6 | 5.16 | 4.46 | 11.1 | 1.02 | 1.14 | 1.12 | 272 | 669 | 36.4 | 22.5 | 71.9 | 0.744 | 1054 |
| 600S200-68 | 15.9 | 1.811 | 345 | 3.87 | 0.493 | 1.71 | 58.8 | 0.166 | 18.4 | 30.4 | 1.71 | 21.6 | 7.42* | 6.02 | 16.4 | 1.28 | 1.38 | 1.42 | 539 | 818 | 35.9 | 22.3 | 71.3 | 0.746 | 998 |
| 600S200-97 | 15.9 | 2.583 | 345 | 5.40 | 0.689 | 2.34 | 58.2 | 0.221 | 17.9 | 59.6 | 2.34 | 30.7 | 11.0* | 9.33 | 21.7 | 1.78 | 1.83 | 1.89 | 1531 | 1096 | 35.0 | 21.8 | 70.3 | 0.752 | 973 |
| 600S250-33 | 15.9 | 0.879 | 230 | 2.09 | 0.267 | 0.992 | 61.0 | 0.148 | 23.6 | 3.63 | 0.941 | 10.6 | 2.18 | 1.85 | 3.63 | 0.565 | 0.641 | 0.547 | 68.7 | 716 | 47.9 | 29.0 | 81.1 | 0.651 | 1588 |
| 600S250-43 | 15.9 | 1.146 | 230 | 2.72 | 0.347 | 1.28 | 60.9 | 0.191 | 23.4 | 8.04 | 1.27 | 15.0 | 3.08 | 2.67 | 7.05 | 0.754 | 0.854 | 0.776 | 152 | 916 | 47.6 | 28.9 | 80.7 | 0.652 | 1582 |
| 600S250-54 | 15.9 | 1.438 | 345 | 3.39 | 0.432 | 1.59 | 60.7 | 0.234 | 23.3 | 16.0 | 1.52 | 17.5 | 5.43 | 4.69 | 11.1 | 1.41 | 1.59 | 1.38 | 298 | 1126 | 47.2 | 28.7 | 80.3 | 0.654 | 1280 |
| 600S250-68 | 15.9 | 1.811 | 345 | 4.23 | 0.539 | 1.97 | 60.4 | 0.286 | 23.1 | 30.4 | 1.94 | 22.7 | 7.04 | 6.36 | 16.4 | 1.79 | 1.94 | 1.84 | 589 | 1382 | 46.8 | 28.4 | 79.8 | 0.657 | 1278 |
| 600S250-97 | 15.9 | 2.583 | 345 | 5.92 | 0.754 | 2.70 | 59.9 | 0.384 | 22.6 | 59.6 | 2.70 | 33.8 | 11.8* | 10.0 | 21.7 | 2.51 | 2.59 | 2.69 | 1677 | 1865 | 45.8 | 27.9 | 78.7 | 0.661 | 1199 |
| 600S300-33 | 15.9 | 0.879 | 230 | 2.27 | 0.289 | 1.12 | 62.3 | 0.230 | 28.2 | 3.63 | 1.02 | 10.9 | 2.22 | 1.90 | 3.63 | 0.738 | 0.845 | 0.641 | 74.4 | 1097 | 59.1 | 35.2 | 90.3 | 0.572 | 1854 |
| 600S300-43 | 15.9 | 1.146 | 230 | 2.95 | 0.376 | 1.45 | 62.1 | 0.296 | 28.1 | 8.04 | 1.37 | 15.5 | 3.17 | 2.76 | 7.05 | 0.986 | 1.12 | 0.919 | 164 | 1406 | 58.8 | 35.1 | 90.0 | 0.574 | 1849 |
| 600S300-54 | 15.9 | 1.438 | 345 | 3.68 | 0.468 | 1.80 | 62.0 | 0.364 | 27.9 | 16.0 | 1.64 | 18.1 | 5.62 | 4.85 | 11.1 | 1.85 | 2.10 | 1.62 | 323 | 1733 | 58.4 | 34.8 | 89.6 | 0.575 | 1499 |
| 600S300-68 | 15.9 | 1.811 | 345 | 4.59 | 0.585 | 2.23 | 61.7 | 0.448 | 27.7 | 30.4 | 2.11 | 23.7 | 7.35 | 6.61 | 16.4 | 2.35 | 2.57 | 2.19 | 640 | 2131 | 57.9 | 34.6 | 89.1 | 0.577 | 1496 |
| 600S300-97 | 15.9 | 2.583 | 345 | 6.43 | 0.820 | 3.07 | 61.2 | 0.605 | 27.2 | 59.6 | 3.02 | 36.8 | 11.4 | 10.5 | 21.7 | 3.34 | 3.46 | 3.42 | 1823 | 2894 | 56.9 | 34.1 | 87.9 | 0.581 | 1494 |
| 800S162-43 | 12.7 | 1.146 | 230 | 2.72 | 0.347 | 1.93 | 74.6 | 0.067 | 13.9 | 5.97 | 1.87 | 16.7 | 3.42 | 2.99 | 5.97 | 0.364 | 0.414 | 0.420 | 152 | 557 | 23.5 | 15.3 | 79.5 | 0.912 | 1011 |
| 800S162-54 | 12.7 | 1.438 | 345 | 3.39 | 0.432 | 2.39 | 74.3 | 0.081 | 13.7 | 11.9 | 2.32 | 20.1 | 6.24 | 5.32 | 11.9 | 0.675 | 0.763 | 0.774 | 298 | 682 | 23.2 | 15.1 | 79.1 | 0.914 | 815 |
| 800S162-68 | 12.7 | 1.811 | 345 | 4.23 | 0.539 | 2.95 | 74.0 | 0.098 | 13.5 | 24.0 | 2.93 | 27.3 | 8.46 | 7.29 | 19.1 | 0.843 | 0.920 | 0.934 | 589 | 831 | 22.8 | 14.9 | 78.6 | 0.916 | 808 |
| 800S162-97 | 12.7 | 2.583 | 345 | 5.92 | 0.754 | 4.04 | 73.2 | 0.127 | 13.0 | 61.9 | 4.04 | 39.8 | 12.3 | 11.6 | 33.8 | 1.15 | 1.19 | 1.22 | 1677 | 1105 | 22.0 | 14.4 | 77.5 | 0.920 | 795 |
| 800S200-43 | 15.9 | 1.146 | 230 | 2.95 | 0.376 | 2.21 | 76.7 | 0.121 | 18.0 | 5.97 | 2.21 | 21.2 | 4.33 | 3.45 | 5.97 | 0.550 | 0.636 | 0.646 | 164 | 1020 | 32.4 | 20.6 | 85.2 | 0.855 | 1278 |
| 800S200-54 | 15.9 | 1.438 | 345 | 3.68 | 0.468 | 2.74 | 76.4 | 0.149 | 17.8 | 11.9 | 2.74 | 24.5 | 7.61 | 6.11 | 11.9 | 1.02 | 1.18 | 1.15 | 323 | 1252 | 32.1 | 20.4 | 84.8 | 0.856 | 1031 |
| 800S200-68 | 15.9 | 1.811 | 345 | 4.59 | 0.585 | 3.39 | 76.1 | 0.181 | 17.6 | 24.0 | 3.39 | 32.2 | 11.1* | 8.34 | 19.1 | 1.29 | 1.44 | 1.46 | 640 | 1534 | 31.7 | 20.2 | 84.3 | 0.859 | 975 |
| 800S200-97 | 15.9 | 2.583 | 345 | 6.43 | 0.820 | 4.66 | 75.4 | 0.240 | 17.1 | 61.9 | 4.66 | 45.9 | 16.4* | 13.2 | 33.8 | 1.80 | 1.90 | 1.93 | 1823 | 2063 | 30.8 | 19.7 | 83.3 | 0.863 | 945 |
| 800S250-43 | 15.9 | 1.146 | 230 | 3.18 | 0.405 | 2.50 | 78.7 | 0.208 | 22.7 | 5.97 | 2.49 | 21.5 | 4.40 | 3.63 | 5.97 | 0.758 | 0.890 | 0.801 | 177 | 1712 | 42.5 | 26.5 | 92.3 | 0.787 | 1562 |
| 800S250-54 | 15.9 | 1.438 | 345 | 3.96 | 0.505 | 3.11 | 78.5 | 0.256 | 22.5 | 11.9 | 2.98 | 25.0 | 7.75 | 6.41 | 11.9 | 1.42 | 1.66 | 1.42 | 348 | 2108 | 42.2 | 26.3 | 91.9 | 0.789 | 1262 |
| 800S250-68 | 15.9 | 1.811 | 345 | 4.95 | 0.631 | 3.86 | 78.2 | 0.313 | 22.3 | 24.0 | 3.80 | 33.7 | 10.5 | 8.78 | 19.1 | 1.80 | 2.03 | 1.90 | 690 | 2592 | 41.8 | 26.1 | 91.4 | 0.791 | 1257 |
| 800S250-97 | 15.9 | 2.583 | 345 | 6.95 | 0.885 | 5.32 | 77.5 | 0.420 | 21.8 | 61.9 | 5.32 | 50.0 | 17.4* | 14.1 | 33.8 | 2.55 | 2.71 | 2.77 | 1969 | 3515 | 40.8 | 25.6 | 90.3 | 0.796 | 1176 |
| 800S300-43 | 15.9 | 1.146 | 230 | 3.40 | 0.434 | 2.80 | 80.4 | 0.324 | 27.3 | 5.97 | 2.66 | 21.5 | 4.40 | 3.73 | 5.97 | 0.991 | 1.18 | 0.941 | 190 | 2628 | 53.0 | 32.5 | 100 | 0.719 | 1836 |
| 800S300-54 | 15.9 | 1.438 | 345 | 4.25 | 0.541 | 3.48 | 80.2 | 0.399 | 27.2 | 11.9 | 3.19 | 25.1 | 7.80 | 6.59 | 11.9 | 1.86 | 2.20 | 1.66 | 373 | 3243 | 52.7 | 32.3 | 99.7 | 0.721 | 1486 |
| 800S300-68 | 15.9 | 1.811 | 345 | 5.31 | 0.677 | 4.32 | 79.9 | 0.491 | 26.9 | 24.0 | 4.10 | 35.1 | 10.9 | 9.07 | 19.1 | 2.37 | 2.70 | 2.26 | 740 | 3998 | 52.2 | 32.1 | 99.2 | 0.723 | 1481 |
| 800S300-97 | 15.9 | 2.583 | 345 | 7.46 | 0.951 | 5.98 | 79.3 | 0.664 | 26.4 | 61.9 | 5.88 | 54.1 | 16.8 | 14.7 | 33.8 | 3.39 | 3.64 | 3.54 | 2115 | 5452 | 51.2 | 31.6 | 98.1 | 0.727 | 1473 |

* Cold work of forming applies

Bailey Metal Products, Dass Metal Products, DCM Metal Corp., EB Metal Inc., Imperial Building Products, Manugypse, Groupe UP, Trebor Building Products Ltd.

## Joist Section Properties

### Table Notes

1 Inside bend radius values are shown in the General Notes.

2 Gross section properties are based on the full-unreduced cross section of the joist sections, away from the punchouts.

3 The factored moment resistance for design is based on the lesser of local and distortional buckling. Distortional buckling is based on an assumed rotational stiffness of $K_\varphi = 0$.

| | | | | GROSS | | | | | | | PERFORATED EFFECTIVE | | | | | | | | TORSIONAL | | | | | | |
|---|---|---|---|---|---|---|---|---|---|---|---|---|---|---|---|---|---|---|---|---|---|---|---|---|---|
| Stud Designation | Lip (mm) | Base Design Thickness (mm) | $F_y$ (MPa) | Mass (kg/m) | Area (E+03) ($mm^2$) | $I_x$ (E+06) ($mm^4$) | $r_x$ (mm) | $I_y$ (E+06) ($mm^4$) | $r_y$ (mm) | $V_{rg}$ (kN) | $I_{xd}$ (E+06) ($mm^4$) | $S_{xe}$ (E+03) ($mm^3$) | $M_{rxLB}$ (kN-m) | $M_{rxDB}$ (kN-m) | $V_{rn}$ (kN) | $M_{ryLB}$ web comp. (kN-m) | $M_{ryLB}$ lip comp. (kN-m) | $M_{ryDB}$ lip comp. (kN-m) | J ($mm^4$) | $C_w$ (E+06) ($mm^6$) | $x_o$ (mm) | m (mm) | $r_o$ (mm) | ß | $L_u$ (mm) |
| 600S162-43 | 12.7 | 1.146 | 230 | 2.26 | 0.288 | 0.964 | 57.8 | 0.0618 | 14.6 | 8.04 | 0.964 | 12.6 | 2.84* | 2.20 | 7.05 | 0.363 | 0.400 | 0.411 | 126 | 294 | 27.0 | 17.0 | 65.5 | 0.830 | 991 |
| 600S162-54 | 12.7 | 1.438 | 345 | 2.82 | 0.359 | 1.19 | 57.6 | 0.0751 | 14.5 | 16.0 | 1.19 | 15.0 | 5.15* | 3.91 | 11.1 | 0.670 | 0.738 | 0.757 | 247 | 359 | 26.6 | 16.8 | 65.1 | 0.833 | 798 |
| 600S162-68 | 12.7 | 1.811 | 345 | 3.51 | 0.447 | 1.47 | 57.3 | 0.0907 | 14.2 | 30.4 | 1.47 | 19.1 | 6.70* | 5.28 | 16.4 | 0.836 | 0.888 | 0.914 | 489 | 437 | 26.2 | 16.6 | 64.6 | 0.835 | 782 |
| 600S162-97 | 12.7 | 2.583 | 345 | 4.89 | 0.623 | 2.00 | 56.6 | 0.118 | 13.8 | 59.6 | 2.00 | 26.2 | 9.64* | 8.07 | 21.7 | 1.13 | 1.15 | 1.19 | 1385 | 578 | 25.3 | 16.2 | 63.5 | 0.841 | 757 |
| 600S200-43 | 15.9 | 1.146 | 230 | 2.49 | 0.317 | 1.12 | 59.3 | 0.112 | 18.8 | 8.04 | 1.12 | 14.3 | 2.93 | 2.52 | 7.05 | 0.547 | 0.614 | 0.626 | 139 | 546 | 36.7 | 22.7 | 72.2 | 0.742 | 1306 |
| 600S200-54 | 15.9 | 1.438 | 345 | 3.10 | 0.395 | 1.38 | 59.1 | 0.137 | 18.6 | 16.0 | 1.38 | 16.6 | 5.16 | 4.46 | 11.1 | 1.02 | 1.14 | 1.12 | 272 | 669 | 36.4 | 22.5 | 71.9 | 0.744 | 1057 |
| 600S200-68 | 15.9 | 1.811 | 345 | 3.87 | 0.493 | 1.71 | 58.8 | 0.166 | 18.4 | 30.4 | 1.71 | 21.6 | 7.42* | 6.02 | 16.4 | 1.28 | 1.38 | 1.42 | 539 | 818 | 35.9 | 22.3 | 71.3 | 0.746 | 998 |
| 600S200-97 | 15.9 | 2.583 | 345 | 5.40 | 0.689 | 2.34 | 58.2 | 0.221 | 17.9 | 59.6 | 2.34 | 30.7 | 11.0* | 9.33 | 21.7 | 1.78 | 1.83 | 1.89 | 1531 | 1096 | 35.0 | 21.8 | 70.3 | 0.752 | 973 |
| 600S250-43 | 15.9 | 1.146 | 230 | 2.72 | 0.347 | 1.28 | 60.9 | 0.191 | 23.4 | 8.04 | 1.27 | 15.0 | 3.08 | 2.67 | 7.05 | 0.754 | 0.854 | 0.776 | 152 | 916 | 47.6 | 28.9 | 80.7 | 0.652 | 1582 |
| 600S250-54 | 15.9 | 1.438 | 345 | 3.39 | 0.432 | 1.59 | 60.7 | 0.234 | 23.3 | 16.0 | 1.52 | 17.5 | 5.43 | 4.69 | 11.1 | 1.41 | 1.59 | 1.38 | 298 | 1126 | 47.2 | 28.7 | 80.3 | 0.654 | 1280 |
| 600S250-68 | 15.9 | 1.811 | 345 | 4.23 | 0.539 | 1.97 | 60.4 | 0.286 | 23.1 | 30.4 | 1.94 | 22.7 | 7.04 | 6.36 | 16.4 | 1.79 | 1.94 | 1.84 | 589 | 1382 | 46.8 | 28.4 | 79.8 | 0.657 | 1278 |
| 600S250-97 | 15.9 | 2.583 | 345 | 5.92 | 0.754 | 2.70 | 59.9 | 0.384 | 22.6 | 59.6 | 2.70 | 33.8 | 11.8* | 10.0 | 21.7 | 2.51 | 2.59 | 2.69 | 1677 | 1865 | 45.8 | 27.9 | 78.7 | 0.661 | 1199 |
| 600S300-43 | 15.9 | 1.146 | 230 | 2.95 | 0.376 | 1.45 | 62.1 | 0.296 | 28.1 | 8.04 | 1.37 | 15.5 | 3.17 | 2.76 | 7.05 | 0.986 | 1.12 | 0.919 | 164 | 1406 | 58.8 | 35.1 | 90.0 | 0.574 | 1849 |
| 600S300-54 | 15.9 | 1.438 | 345 | 3.68 | 0.468 | 1.80 | 62.0 | 0.364 | 27.9 | 16.0 | 1.64 | 18.1 | 5.62 | 4.85 | 11.1 | 1.85 | 2.10 | 1.62 | 323 | 1733 | 58.4 | 34.8 | 89.6 | 0.575 | 1499 |
| 600S300-68 | 15.9 | 1.811 | 345 | 4.59 | 0.585 | 2.23 | 61.7 | 0.448 | 27.7 | 30.4 | 2.11 | 23.7 | 7.35 | 6.61 | 16.4 | 2.35 | 2.57 | 2.19 | 640 | 2131 | 57.9 | 34.6 | 89.1 | 0.577 | 1496 |
| 600S300-97 | 15.9 | 2.583 | 345 | 6.43 | 0.820 | 3.07 | 61.2 | 0.605 | 27.2 | 59.6 | 3.02 | 36.8 | 11.4 | 10.5 | 21.7 | 3.34 | 3.46 | 3.42 | 1823 | 2894 | 56.9 | 34.1 | 87.9 | 0.581 | 1494 |
| 800S162-43 | 12.7 | 1.146 | 230 | 2.72 | 0.347 | 1.93 | 74.6 | 0.0666 | 13.9 | 5.97 | 1.87 | 16.7 | 3.42 | 2.99 | 5.97 | 0.365 | 0.414 | 0.420 | 152 | 557 | 23.5 | 15.3 | 79.5 | 0.912 | 1011 |
| 800S162-54 | 12.7 | 1.438 | 345 | 3.39 | 0.432 | 2.39 | 74.3 | 0.0809 | 13.7 | 11.9 | 2.32 | 20.1 | 6.24 | 5.32 | 11.9 | 0.675 | 0.763 | 0.774 | 298 | 682 | 23.2 | 15.1 | 79.1 | 0.914 | 815 |
| 800S162-68 | 12.7 | 1.811 | 345 | 4.23 | 0.539 | 2.95 | 74.0 | 0.0976 | 13.5 | 24.0 | 2.93 | 27.3 | 8.46 | 7.29 | 19.1 | 0.844 | 0.920 | 0.934 | 589 | 831 | 22.8 | 14.9 | 78.6 | 0.916 | 810 |
| 800S162-97 | 12.7 | 2.583 | 345 | 5.92 | 0.754 | 4.04 | 73.2 | 0.127 | 13.0 | 61.9 | 4.04 | 39.8 | 12.3 | 11.6 | 33.8 | 1.15 | 1.20 | 1.22 | 1677 | 1105 | 22.0 | 14.4 | 77.5 | 0.920 | 798 |
| 800S200-43 | 15.9 | 1.146 | 230 | 2.95 | 0.376 | 2.21 | 76.7 | 0.121 | 18.0 | 5.97 | 2.21 | 21.2 | 4.33 | 3.45 | 5.97 | 0.550 | 0.636 | 0.646 | 164 | 1020 | 32.4 | 20.6 | 85.2 | 0.855 | 1278 |
| 800S200-54 | 15.9 | 1.438 | 345 | 3.68 | 0.468 | 2.74 | 76.4 | 0.149 | 17.8 | 11.9 | 2.74 | 24.5 | 7.61 | 6.11 | 11.9 | 1.02 | 1.18 | 1.15 | 323 | 1252 | 32.1 | 20.4 | 84.8 | 0.856 | 1034 |
| 800S200-68 | 15.9 | 1.811 | 345 | 4.59 | 0.585 | 3.39 | 76.1 | 0.181 | 17.6 | 24.0 | 3.39 | 32.2 | 11.1* | 8.34 | 19.1 | 1.29 | 1.44 | 1.46 | 640 | 1534 | 31.7 | 20.2 | 84.3 | 0.859 | 975 |
| 800S200-97 | 15.9 | 2.583 | 345 | 6.43 | 0.820 | 4.66 | 75.4 | 0.240 | 17.1 | 61.9 | 4.66 | 45.9 | 16.4* | 13.2 | 33.8 | 1.80 | 1.90 | 1.93 | 1823 | 2063 | 30.8 | 19.7 | 83.3 | 0.863 | 945 |
| 800S250-43 | 15.9 | 1.146 | 230 | 3.18 | 0.405 | 2.50 | 78.7 | 0.208 | 22.7 | 5.97 | 2.49 | 21.5 | 4.40 | 3.63 | 5.97 | 0.758 | 0.890 | 0.801 | 177 | 1712 | 42.5 | 26.5 | 92.3 | 0.787 | 1562 |
| 800S250-54 | 15.9 | 1.438 | 345 | 3.96 | 0.505 | 3.11 | 78.5 | 0.256 | 22.5 | 11.9 | 2.98 | 25.0 | 7.75 | 6.41 | 11.9 | 1.42 | 1.66 | 1.42 | 348 | 2108 | 42.2 | 26.3 | 91.9 | 0.789 | 1265 |
| 800S250-68 | 15.9 | 1.811 | 345 | 4.95 | 0.631 | 3.86 | 78.2 | 0.313 | 22.3 | 24.0 | 3.80 | 33.7 | 10.5 | 8.78 | 19.1 | 1.80 | 2.03 | 1.90 | 690 | 2592 | 41.8 | 26.1 | 91.4 | 0.791 | 1260 |
| 800S250-97 | 15.9 | 2.583 | 345 | 6.95 | 0.885 | 5.32 | 77.5 | 0.420 | 21.8 | 61.9 | 5.32 | 50.0 | 17.4* | 14.1 | 33.8 | 2.55 | 2.71 | 2.77 | 1969 | 3515 | 40.8 | 25.6 | 90.3 | 0.796 | 1179 |
| 800S300-43 | 15.9 | 1.146 | 230 | 3.40 | 0.434 | 2.80 | 80.4 | 0.324 | 27.3 | 5.97 | 2.66 | 21.5 | 4.40 | 3.73 | 5.97 | 0.991 | 1.18 | 0.941 | 190 | 2628 | 53.0 | 32.5 | 100 | 0.719 | 1836 |
| 800S300-54 | 15.9 | 1.438 | 345 | 4.25 | 0.541 | 3.48 | 80.2 | 0.399 | 27.2 | 11.9 | 3.19 | 25.1 | 7.80 | 6.59 | 11.9 | 1.86 | 2.20 | 1.66 | 373 | 3243 | 52.7 | 32.3 | 99.7 | 0.721 | 1486 |
| 800S300-68 | 15.9 | 1.811 | 345 | 5.31 | 0.677 | 4.32 | 79.9 | 0.491 | 26.9 | 24.0 | 4.10 | 35.1 | 10.9 | 9.07 | 19.1 | 2.37 | 2.70 | 2.26 | 740 | 3998 | 52.2 | 32.1 | 99.2 | 0.723 | 1481 |
| 800S300-97 | 15.9 | 2.583 | 345 | 7.46 | 0.951 | 5.98 | 79.3 | 0.664 | 26.4 | 61.9 | 5.88 | 54.1 | 16.8 | 14.7 | 33.8 | 3.39 | 3.64 | 3.54 | 2115 | 5452 | 51.2 | 31.6 | 98.1 | 0.727 | 1473 |

* Cold work of forming applies

Bailey Metal Products, Dass Metal Products, DCM Metal Corp., EB Metal Inc., Imperial Building Products, Manugypse, Groupe UP, Trebor Building Products Ltd.

| | | | | GROSS | | | | | | | PERFORATED EFFECTIVE | | | | | | | | TORSIONAL | | | | | | |
|---|---|---|---|---|---|---|---|---|---|---|---|---|---|---|---|---|---|---|---|---|---|---|---|---|---|
| Stud Designation | Lip (mm) | Base Design Thickness (mm) | $F_y$ (MPa) | Mass (kg/m) | Area (E+03) ($mm^2$) | $I_x$ (E+06) ($mm^4$) | $r_x$ (mm) | $I_y$ (E+06) ($mm^4$) | $r_y$ (mm) | $V_{rg}$ (kN) | $I_{xd}$ (E+06) ($mm^4$) | $S_{xe}$ (E+03) ($mm^3$) | $M_{rxLB}$ (kN-m) | $M_{rxDB}$ (kN-m) | $V_{rn}$ (kN) | $M_{ryLB}$ web comp. (kN-m) | $M_{ryLB}$ lip comp. (kN-m) | $M_{ryDB}$ lip comp. (kN-m) | J ($mm^4$) | $C_w$ (E+06) ($mm^6$) | $x_o$ (mm) | m (mm) | $r_o$ (mm) | ß | $L_u$ (mm) |
| 1000S162-54 | 12.7 | 1.438 | 345 | 3.96 | 0.505 | 4.14 | 90.6 | 0.0851 | 13.0 | 9.43 | 3.87 | 25.7 | 7.99 | 6.58 | 9.43 | 0.677 | 0.777 | 0.785 | 348 | 1127 | 20.6 | 13.7 | 93.8 | 0.952 | 795 |
| 1000S162-68 | 12.7 | 1.811 | 345 | 4.95 | 0.631 | 5.13 | 90.2 | 0.103 | 12.8 | 19.0 | 4.96 | 35.3 | 11.0 | 9.14 | 19.0 | 0.847 | 0.939 | 0.948 | 690 | 1375 | 20.3 | 13.5 | 93.3 | 0.953 | 787 |
| 1000S162-97 | 12.7 | 2.583 | 345 | 6.95 | 0.885 | 7.06 | 89.3 | 0.133 | 12.3 | 56.0 | 7.06 | 53.6 | 16.6 | 14.9 | 40.8 | 1.16 | 1.22 | 1.23 | 1969 | 1833 | 19.5 | 13.1 | 92.3 | 0.955 | 772 |
| 1000S200-54 | 15.9 | 1.438 | 345 | 4.25 | 0.541 | 4.70 | 93.1 | 0.157 | 17.0 | 9.43 | 4.43 | 27.9 | 8.66 | 7.65 | 9.43 | 1.03 | 1.21 | 1.18 | 373 | 2058 | 28.8 | 18.7 | 99.0 | 0.915 | 1011 |
| 1000S200-68 | 15.9 | 1.811 | 345 | 5.31 | 0.677 | 5.83 | 92.8 | 0.191 | 16.8 | 19.0 | 5.66 | 39.6 | 12.3 | 10.6 | 19.0 | 1.30 | 1.47 | 1.49 | 740 | 2524 | 28.4 | 18.5 | 98.5 | 0.917 | 1006 |
| 1000S200-97 | 15.9 | 2.583 | 345 | 7.46 | 0.951 | 8.05 | 92.0 | 0.254 | 16.3 | 56.0 | 8.05 | 61.3 | 19.0 | 17.1 | 40.8 | 1.82 | 1.95 | 1.97 | 2115 | 3405 | 27.6 | 18.1 | 97.4 | 0.920 | 991 |
| 1000S250-54 | 15.9 | 1.438 | 345 | 4.54 | 0.578 | 5.28 | 95.6 | 0.272 | 21.7 | 9.43 | 5.08 | 30.8 | 9.55 | 8.08 | 9.43 | 1.42 | 1.70 | 1.46 | 398 | 3470 | 38.2 | 24.3 | 105 | 0.868 | 1247 |
| 1000S250-68 | 15.9 | 1.811 | 345 | 5.68 | 0.723 | 6.56 | 95.2 | 0.333 | 21.4 | 19.0 | 6.47 | 45.3 | 14.1 | 11.2 | 19.0 | 1.81 | 2.08 | 1.94 | 791 | 4272 | 37.8 | 24.1 | 105 | 0.870 | 1240 |
| 1000S250-97 | 15.9 | 2.583 | 345 | 7.98 | 1.02 | 9.09 | 94.5 | 0.446 | 21.0 | 56.0 | 9.08 | 68.5 | 23.8* | 18.2 | 40.8 | 2.57 | 2.79 | 2.82 | 2261 | 5809 | 36.9 | 23.7 | 104 | 0.873 | 1158 |
| 1000S300-54 | 15.9 | 1.438 | 345 | 4.82 | 0.615 | 5.86 | 97.7 | 0.426 | 26.3 | 9.43 | 5.33 | 31.2 | 9.66 | 8.32 | 9.43 | 1.86 | 2.26 | 1.71 | 423 | 5341 | 48.1 | 30.1 | 112 | 0.816 | 1473 |
| 1000S300-68 | 15.9 | 1.811 | 345 | 6.04 | 0.769 | 7.29 | 97.4 | 0.524 | 26.1 | 19.0 | 6.93 | 45.9 | 14.2 | 11.5 | 19.0 | 2.38 | 2.78 | 2.32 | 841 | 6593 | 47.6 | 29.9 | 111 | 0.818 | 1468 |
| 1000S300-97 | 15.9 | 2.583 | 345 | 8.49 | 1.08 | 10.1 | 96.7 | 0.709 | 25.6 | 56.0 | 9.95 | 73.7 | 22.9 | 18.9 | 40.8 | 3.41 | 3.75 | 3.63 | 2407 | 9015 | 46.7 | 29.4 | 110 | 0.821 | 1458 |
| 1200S162-68 | 12.7 | 1.811 | 345 | 5.68 | 0.723 | 8.13 | 106 | 0.106 | 12.1 | 15.7 | 7.60 | 43.3 | 13.4 | 10.8 | 15.7 | 0.850 | 0.951 | 0.958 | 791 | 2078 | 18.3 | 12.3 | 108 | 0.972 | 767 |
| 1200S162-97 | 12.7 | 2.583 | 345 | 7.98 | 1.02 | 11.2 | 105 | 0.138 | 11.7 | 46.3 | 11.1 | 67.0 | 20.8 | 18.0 | 42.1 | 1.16 | 1.24 | 1.24 | 2261 | 2774 | 17.6 | 11.9 | 107 | 0.973 | 749 |
| 1200S200-68 | 15.9 | 1.811 | 345 | 6.04 | 0.769 | 9.14 | 109 | 0.199 | 16.1 | 15.7 | 8.62 | 48.5 | 15.1 | 12.5 | 15.7 | 1.30 | 1.49 | 1.50 | 841 | 3807 | 25.8 | 17.1 | 113 | 0.948 | 983 |
| 1200S200-97 | 15.9 | 2.583 | 345 | 8.49 | 1.08 | 12.7 | 108 | 0.264 | 15.6 | 46.3 | 12.5 | 76.3 | 23.7 | 20.8 | 42.1 | 1.82 | 1.98 | 2.00 | 2407 | 5142 | 25.1 | 16.7 | 112 | 0.950 | 968 |
| 1200S250-68 | 15.9 | 1.811 | 345 | 6.40 | 0.815 | 10.2 | 112 | 0.348 | 20.7 | 15.7 | 9.53 | 49.2 | 15.3 | 13.4 | 15.7 | 1.81 | 2.12 | 1.98 | 891 | 6454 | 34.6 | 22.5 | 119 | 0.915 | 1222 |
| 1200S250-97 | 15.9 | 2.583 | 345 | 9.01 | 1.15 | 14.2 | 111 | 0.467 | 20.2 | 46.3 | 14.0 | 82.5 | 25.6 | 22.1 | 42.1 | 2.58 | 2.84 | 2.87 | 2553 | 8790 | 33.8 | 22.0 | 118 | 0.918 | 1207 |
| 1200S300-68 | 15.9 | 1.811 | 345 | 6.76 | 0.861 | 11.2 | 114 | 0.549 | 25.2 | 15.7 | 10.7 | 54.3 | 16.9 | 13.9 | 15.7 | 2.39 | 2.83 | 2.36 | 941 | 9970 | 43.8 | 28.0 | 125 | 0.877 | 1453 |
| 1200S300-97 | 15.9 | 2.583 | 345 | 9.52 | 1.21 | 15.7 | 114 | 0.744 | 24.8 | 46.3 | 15.4 | 95.5 | 29.6 | 23.2 | 42.1 | 3.43 | 3.83 | 3.69 | 2699 | 13656 | 43.0 | 27.6 | 124 | 0.880 | 1440 |
| 1400S162-68 | 12.7 | 1.811 | 345 | 6.40 | 0.815 | 12.1 | 122 | 0.109 | 11.6 | 13.4 | 10.9 | 51.4 | 15.9 | 12.1 | 13.4 | 0.851 | 0.959 | 0.965 | 891 | 2945 | 16.6 | 11.4 | 123 | 0.982 | 747 |
| 1400S162-97 | 12.7 | 2.583 | 345 | 9.01 | 1.15 | 16.7 | 121 | 0.142 | 11.1 | 39.4 | 16.1 | 80.5 | 25.0 | 20.7 | 39.4 | 1.16 | 1.25 | 1.25 | 2553 | 3934 | 16.0 | 11.0 | 122 | 0.983 | 729 |
| 1400S200-68 | 15.9 | 1.811 | 345 | 6.76 | 0.861 | 13.4 | 125 | 0.206 | 15.4 | 13.4 | 12.3 | 57.4 | 17.8 | 14.3 | 13.4 | 1.30 | 1.51 | 1.51 | 941 | 5393 | 23.7 | 15.9 | 128 | 0.966 | 963 |
| 1400S200-97 | 15.9 | 2.583 | 345 | 9.52 | 1.21 | 18.7 | 124 | 0.273 | 15.0 | 39.4 | 18.0 | 91.4 | 28.4 | 24.1 | 39.4 | 1.83 | 2.00 | 2.01 | 2699 | 7292 | 23.0 | 15.5 | 127 | 0.967 | 947 |
| 1400S250-68 | 15.9 | 1.811 | 345 | 7.12 | 0.907 | 14.9 | 128 | 0.360 | 19.9 | 13.4 | 13.5 | 58.1 | 18.0 | 15.5 | 13.4 | 1.81 | 2.15 | 1.99 | 992 | 9162 | 31.9 | 21.0 | 134 | 0.943 | 1201 |
| 1400S250-97 | 15.9 | 2.583 | 345 | 10.0 | 1.28 | 20.7 | 127 | 0.483 | 19.4 | 39.4 | 20.1 | 98.5 | 30.5 | 25.9 | 39.4 | 2.58 | 2.88 | 2.90 | 2845 | 12492 | 31.1 | 20.6 | 132 | 0.945 | 1186 |
| 1400S300-68 | 15.9 | 1.811 | 345 | 7.48 | 0.953 | 16.3 | 131 | 0.570 | 24.5 | 13.4 | 14.3 | 59.8 | 18.6 | 16.2 | 13.4 | 2.39 | 2.88 | 2.40 | 1042 | 14171 | 40.7 | 26.4 | 139 | 0.915 | 1435 |
| 1400S300-97 | 15.9 | 2.583 | 345 | 10.6 | 1.34 | 22.8 | 130 | 0.772 | 24.0 | 39.4 | 21.7 | 104 | 32.4 | 27.1 | 39.4 | 3.44 | 3.89 | 3.74 | 2991 | 19433 | 39.8 | 25.9 | 138 | 0.917 | 1420 |

* Cold work of forming applies

Bailey Metal Products, Dass Metal Products, DCM Metal Corp., EB Metal Inc., Imperial Building Products, Manugypse, Groupe UP, Trebor Building Products Ltd.

## Track Section Properties

### Table Notes

1 Track web depths are equal to the nominal stud depth plus 2 times the design thickness plus the inside bend radius.
2 If present, hems are ignored.

| | | | GROSS | | | | | | | EFFECTIVE | | | TORSIONAL | | | | | | |
|---|---|---|---|---|---|---|---|---|---|---|---|---|---|---|---|---|---|---|---|
| Track Designation | Base Design Thickness (mm) | $F_y$ (MPa) | Mass (kg/m) | Area (E+03) ($mm^2$) | $I_x$ (E+06) ($mm^4$) | $r_x$ (mm) | $I_y$ (E+06) ($mm^4$) | $r_y$ (mm) | $V_{rg}$ (kN) | $I_{xd}$ (E+06) ($mm^4$) | $S_{xe}$ (E+03) ($mm^3$) | $M_{rx}$ (kN-m) | J ($mm^4$) | $C_w$ (E+06) ($mm^6$) | $x_o$ (mm) | m (mm) | $r_o$ (mm) | ß | $L_u$ (mm) |
| 162T125-18 | 0.478 | 230 | 0.393 | 0.0501 | 0.0174 | 18.6 | 0.00545 | 10.4 | 1.72 | 0.0122 | 0.413 | 0.0844 | 3.81 | 1.88 | 22.3 | 12.8 | 30.7 | 0.479 | 645 |
| 250T125-18 | 0.478 | 230 | 0.476 | 0.0607 | 0.0433 | 26.7 | 0.00624 | 10.2 | 1.39 | 0.0319 | 0.726 | 0.149 | 4.61 | 4.84 | 19.5 | 11.7 | 34.5 | 0.682 | 653 |
| 362T125-18 | 0.478 | 230 | 0.583 | 0.0743 | 0.0990 | 36.5 | 0.00695 | 9.65 | 0.947 | 0.0733 | 1.04 | 0.214 | 5.65 | 11.2 | 16.9 | 10.5 | 41.4 | 0.833 | 653 |
| 362T125-33 | 0.879 | 230 | 1.07 | 0.137 | 0.182 | 36.5 | 0.0125 | 9.58 | 5.82 | 0.159 | 2.85 | 0.584 | 35.2 | 20.3 | 16.7 | 10.4 | 41.4 | 0.836 | 653 |
| 362T125-43 | 1.146 | 230 | 1.40 | 0.178 | 0.238 | 36.6 | 0.0161 | 9.53 | 9.89 | 0.219 | 4.01 | 0.822 | 77.8 | 26.3 | 16.6 | 10.3 | 41.1 | 0.838 | 653 |
| 362T125-54 | 1.438 | 345 | 1.75 | 0.223 | 0.301 | 36.7 | 0.0200 | 9.47 | 19.2 | 0.279 | 5.11 | 1.59 | 154 | 33.1 | 16.5 | 10.3 | 41.4 | 0.841 | 531 |
| 362T125-68 | 1.811 | 345 | 2.21 | 0.281 | 0.383 | 36.9 | 0.0248 | 9.40 | 26.8 | 0.375 | 6.99 | 2.17 | 307 | 41.9 | 16.3 | 10.1 | 41.4 | 0.846 | 533 |
| 362T125-97 | 2.583 | 345 | 3.14 | 0.400 | 0.559 | 37.4 | 0.0342 | 9.25 | 37.7 | 0.559 | 11.1 | 3.43 | 891 | 60.6 | 15.9 | 9.9 | 41.7 | 0.854 | 544 |
| 362T150-33 | 0.879 | 230 | 1.16 | 0.148 | 0.208 | 37.5 | 0.0208 | 11.9 | 5.83 | 0.170 | 2.95 | 0.606 | 38.0 | 33.2 | 21.7 | 13.3 | 45.0 | 0.766 | 785 |
| 362T150-43 | 1.146 | 230 | 1.51 | 0.192 | 0.271 | 37.5 | 0.0268 | 11.8 | 9.92 | 0.236 | 4.18 | 0.856 | 84.2 | 43.1 | 21.6 | 13.2 | 45.0 | 0.768 | 787 |
| 362T150-54 | 1.438 | 345 | 1.90 | 0.241 | 0.343 | 37.7 | 0.0333 | 11.8 | 19.2 | 0.302 | 5.33 | 1.66 | 166 | 54.3 | 21.4 | 13.1 | 45.0 | 0.772 | 640 |
| 362T150-68 | 1.811 | 345 | 2.39 | 0.304 | 0.437 | 37.9 | 0.0414 | 11.7 | 26.8 | 0.409 | 7.36 | 2.28 | 332 | 69.1 | 21.2 | 13.0 | 45.0 | 0.777 | 643 |
| 362T150-97 | 2.583 | 345 | 3.40 | 0.434 | 0.639 | 38.4 | 0.0575 | 11.5 | 37.7 | 0.639 | 12.0 | 3.73 | 964 | 100 | 20.8 | 12.7 | 45.2 | 0.787 | 655 |
| 362T200-33 | 0.879 | 230 | 1.33 | 0.170 | 0.258 | 38.9 | 0.0456 | 16.4 | 5.83 | 0.191 | 3.11 | 0.638 | 43.8 | 72.3 | 32.3 | 19.2 | 53.1 | 0.631 | 1041 |
| 362T200-43 | 1.146 | 230 | 1.74 | 0.221 | 0.336 | 39.0 | 0.0591 | 16.3 | 9.92 | 0.266 | 4.42 | 0.907 | 96.9 | 93.9 | 32.1 | 19.1 | 53.1 | 0.633 | 1044 |
| 362T200-54 | 1.438 | 345 | 2.18 | 0.278 | 0.426 | 39.1 | 0.0736 | 16.3 | 19.2 | 0.341 | 5.65 | 1.76 | 192 | 119 | 32.0 | 19.0 | 53.1 | 0.638 | 848 |
| 362T200-68 | 1.811 | 345 | 2.75 | 0.350 | 0.544 | 39.4 | 0.0918 | 16.2 | 26.8 | 0.466 | 7.87 | 2.44 | 383 | 151 | 31.8 | 18.9 | 53.1 | 0.643 | 853 |
| 362T200-97 | 2.583 | 345 | 3.92 | 0.499 | 0.798 | 40.0 | 0.128 | 16.1 | 37.7 | 0.756 | 13.2 | 4.09 | 1110 | 222 | 31.3 | 18.6 | 53.3 | 0.655 | 871 |
| 362T300-33 | 0.879 | 230 | 1.69 | 0.215 | 0.358 | 40.8 | 0.136 | 25.2 | 5.82 | 0.222 | 3.23 | 0.661 | 55.3 | 218 | 54.8 | 31.3 | 72.9 | 0.434 | 1527 |
| 362T300-43 | 1.146 | 230 | 2.20 | 0.280 | 0.468 | 40.9 | 0.177 | 25.1 | 9.89 | 0.313 | 4.75 | 0.973 | 122 | 283 | 54.7 | 31.3 | 72.6 | 0.435 | 1534 |
| 362T300-54 | 1.438 | 345 | 2.75 | 0.351 | 0.593 | 41.1 | 0.221 | 25.1 | 19.2 | 0.402 | 6.08 | 1.89 | 242 | 359 | 54.5 | 31.2 | 72.6 | 0.439 | 1247 |
| 362T300-68 | 1.811 | 345 | 3.47 | 0.442 | 0.759 | 41.4 | 0.277 | 25.0 | 26.8 | 0.556 | 8.51 | 2.64 | 483 | 459 | 54.3 | 31.0 | 72.6 | 0.443 | 1257 |
| 362T300-97 | 2.583 | 345 | 4.95 | 0.630 | 1.12 | 42.1 | 0.390 | 24.9 | 37.7 | 0.924 | 14.5 | 4.51 | 1401 | 676 | 53.7 | 30.7 | 72.6 | 0.453 | 1280 |
| 400T125-18 | 0.478 | 230 | 0.619 | 0.079 | 0.124 | 39.6 | 0.00712 | 9.50 | 0.859 | 0.0897 | 1.15 | 0.235 | 6.00 | 14.0 | 16.2 | 10.2 | 43.9 | 0.864 | 650 |
| 400T125-33 | 0.879 | 230 | 1.14 | 0.145 | 0.228 | 39.7 | 0.0129 | 9.42 | 5.34 | 0.200 | 3.29 | 0.674 | 37.3 | 25.4 | 16.0 | 10.1 | 43.9 | 0.867 | 650 |
| 400T125-43 | 1.146 | 230 | 1.48 | 0.189 | 0.298 | 39.7 | 0.0166 | 9.37 | 9.89 | 0.275 | 4.62 | 0.945 | 82.6 | 32.8 | 15.9 | 10.0 | 43.7 | 0.868 | 650 |
| 400T125-54 | 1.438 | 345 | 1.86 | 0.237 | 0.376 | 39.9 | 0.0205 | 9.32 | 19.2 | 0.351 | 5.88 | 1.82 | 163 | 41.3 | 15.8 | 9.9 | 43.9 | 0.871 | 528 |
| 400T125-68 | 1.811 | 345 | 2.34 | 0.298 | 0.479 | 40.1 | 0.0254 | 9.25 | 29.6 | 0.469 | 8.00 | 2.48 | 326 | 52.2 | 15.6 | 9.8 | 43.9 | 0.874 | 531 |
| 400T125-97 | 2.583 | 345 | 3.34 | 0.425 | 0.696 | 40.5 | 0.0350 | 9.09 | 41.8 | 0.696 | 12.6 | 3.91 | 945 | 75.1 | 15.2 | 9.6 | 44.2 | 0.881 | 536 |
| 400T150-33 | 0.879 | 230 | 1.23 | 0.156 | 0.259 | 40.7 | 0.0214 | 11.7 | 5.34 | 0.214 | 3.41 | 0.699 | 40.2 | 41.5 | 20.9 | 12.9 | 47.2 | 0.805 | 782 |
| 400T150-43 | 1.146 | 230 | 1.60 | 0.203 | 0.338 | 40.7 | 0.0276 | 11.6 | 9.92 | 0.296 | 4.80 | 0.984 | 89.0 | 53.8 | 20.8 | 12.8 | 47.2 | 0.807 | 785 |
| 400T150-54 | 1.438 | 345 | 2.00 | 0.255 | 0.427 | 40.9 | 0.0342 | 11.6 | 19.2 | 0.378 | 6.13 | 1.90 | 176 | 67.8 | 20.6 | 12.7 | 47.2 | 0.810 | 638 |
| 400T150-68 | 1.811 | 345 | 2.52 | 0.321 | 0.544 | 41.1 | 0.0425 | 11.5 | 29.6 | 0.510 | 8.41 | 2.61 | 351 | 86.0 | 20.4 | 12.6 | 47.2 | 0.814 | 640 |
| 400T150-97 | 2.583 | 345 | 3.59 | 0.458 | 0.792 | 41.6 | 0.0590 | 11.4 | 41.8 | 0.792 | 13.6 | 4.23 | 1018 | 124 | 20.0 | 12.4 | 47.5 | 0.823 | 650 |

Bailey Metal Products, Dass Metal Products, DCM Metal Corp., EB Metal Inc., Imperial Building Products, Manugypse, Groupe UP, Trebor Building Products Ltd.

| | | | GROSS | | | | | | | EFFECTIVE | | | TORSIONAL | | | | | | |
|---|---|---|---|---|---|---|---|---|---|---|---|---|---|---|---|---|---|---|---|
| Track Designation | Base Design Thickness (mm) | $F_y$ (MPa) | Mass (kg/m) | Area (E+03) ($mm^2$) | $I_x$ (E+06) ($mm^4$) | $r_x$ (mm) | $I_y$ (E+06) ($mm^4$) | $r_y$ (mm) | $V_{rg}$ (kN) | $I_{xd}$ (E+06) ($mm^4$) | $S_{xe}$ (E+03) ($mm^3$) | $M_{rx}$ (kN-m) | J ($mm^4$) | $C_w$ (E+06) ($mm^6$) | $x_o$ (mm) | m (mm) | $r_o$ (mm) | ß | $L_u$ (mm) |
| 400T200-33 | 0.879 | 230 | 1.40 | 0.179 | 0.320 | 42.3 | 0.0470 | 16.2 | 5.34 | 0.239 | 3.61 | 0.738 | 46.0 | 90.3 | 31.2 | 18.7 | 55.1 | 0.479 | 1041 |
| 400T200-43 | 1.146 | 230 | 1.82 | 0.232 | 0.417 | 42.4 | 0.0608 | 16.2 | 9.92 | 0.333 | 5.10 | 1.04 | 102 | 117 | 31.1 | 18.6 | 54.9 | 0.680 | 1044 |
| 400T200-54 | 1.438 | 345 | 2.29 | 0.292 | 0.528 | 42.5 | 0.0758 | 16.1 | 19.2 | 0.426 | 6.51 | 2.02 | 201 | 148 | 30.9 | 18.5 | 55.1 | 0.684 | 848 |
| 400T200-68 | 1.811 | 345 | 2.88 | 0.367 | 0.673 | 42.8 | 0.0945 | 16.1 | 29.6 | 0.579 | 9.00 | 2.79 | 402 | 188 | 30.7 | 18.4 | 55.1 | 0.689 | 853 |
| 400T200-97 | 2.583 | 345 | 4.11 | 0.523 | 0.984 | 43.4 | 0.132 | 15.9 | 41.8 | 0.933 | 14.9 | 4.63 | 1164 | 275 | 30.3 | 18.2 | 55.1 | 0.699 | 866 |
| 400T300-33 | 0.879 | 230 | 1.75 | 0.223 | 0.441 | 44.5 | 0.141 | 25.1 | 5.34 | 0.279 | 3.58 | 0.732 | 57.4 | 271 | 53.4 | 30.8 | 73.9 | 0.478 | 1534 |
| 400T300-43 | 1.146 | 230 | 2.28 | 0.291 | 0.576 | 44.5 | 0.183 | 25.1 | 9.89 | 0.391 | 5.47 | 1.12 | 127 | 352 | 53.3 | 30.7 | 73.9 | 0.479 | 1539 |
| 400T300-54 | 1.438 | 345 | 2.86 | 0.365 | 0.730 | 44.7 | 0.228 | 25.0 | 19.2 | 0.501 | 6.99 | 2.17 | 251 | 446 | 53.1 | 30.6 | 73.9 | 0.482 | 1252 |
| 400T300-68 | 1.811 | 345 | 3.60 | 0.459 | 0.932 | 45.1 | 0.286 | 24.9 | 29.6 | 0.689 | 9.73 | 3.02 | 502 | 570 | 52.9 | 30.5 | 73.7 | 0.487 | 1260 |
| 400T300-97 | 2.583 | 345 | 5.14 | 0.655 | 1.37 | 45.7 | 0.403 | 24.8 | 41.8 | 1.14 | 16.5 | 5.11 | 1456 | 835 | 52.3 | 30.2 | 73.7 | 0.497 | 1280 |
| 600T125-18 | 0.478 | 230 | 0.810 | 0.103 | 0.323 | 56.0 | 0.00778 | 8.69 | 0.569 | 0.205 | 1.69 | 0.346 | 7.84 | 35.2 | 13.3 | 8.66 | 58.2 | 0.948 | 632 |
| 600T125-33 | 0.879 | 230 | 1.49 | 0.190 | 0.594 | 56.0 | 0.0141 | 8.61 | 3.54 | 0.500 | 4.86 | 0.996 | 48.8 | 63.8 | 13.1 | 8.56 | 58.2 | 0.949 | 630 |
| 600T125-43 | 1.146 | 230 | 1.94 | 0.247 | 0.775 | 56.0 | 0.0181 | 8.56 | 7.82 | 0.715 | 7.55 | 1.55 | 108 | 82.4 | 13.0 | 8.51 | 58.2 | 0.950 | 627 |
| 600T125-54 | 1.438 | 345 | 2.43 | 0.310 | 0.976 | 56.1 | 0.0224 | 8.51 | 15.5 | 0.912 | 9.70 | 3.01 | 214 | 103 | 12.9 | 8.43 | 58.2 | 0.951 | 511 |
| 600T125-68 | 1.811 | 345 | 3.06 | 0.390 | 1.24 | 56.3 | 0.0278 | 8.43 | 30.4 | 1.21 | 14.1 | 4.36 | 427 | 130 | 12.8 | 8.36 | 58.4 | 0.952 | 508 |
| 600T125-97 | 2.583 | 345 | 4.37 | 0.556 | 1.78 | 56.6 | 0.0383 | 8.31 | 61.9 | 1.78 | 22.1 | 6.85 | 1237 | 184 | 12.5 | 8.15 | 58.7 | 0.955 | 511 |
| 600T150-33 | 0.879 | 230 | 1.58 | 0.201 | 0.662 | 57.4 | 0.0236 | 10.8 | 3.56 | 0.528 | 4.97 | 1.02 | 51.7 | 105 | 17.4 | 11.2 | 61.0 | 0.919 | 767 |
| 600T150-43 | 1.146 | 230 | 2.05 | 0.261 | 0.862 | 57.4 | 0.0304 | 10.8 | 7.83 | 0.760 | 7.77 | 1.59 | 114 | 135 | 17.3 | 11.1 | 61.0 | 0.920 | 767 |
| 600T150-54 | 1.438 | 345 | 2.58 | 0.328 | 1.09 | 57.6 | 0.0378 | 10.7 | 15.5 | 0.971 | 9.98 | 3.10 | 226 | 170 | 17.1 | 11.0 | 61.0 | 0.921 | 622 |
| 600T150-68 | 1.811 | 345 | 3.24 | 0.414 | 1.38 | 57.7 | 0.0469 | 10.6 | 30.5 | 1.30 | 14.6 | 4.53 | 452 | 214 | 17.0 | 10.9 | 61.2 | 0.923 | 622 |
| 600T150-97 | 2.583 | 345 | 4.62 | 0.589 | 1.99 | 58.1 | 0.0650 | 10.5 | 62.0 | 1.99 | 23.7 | 7.34 | 1310 | 305 | 16.7 | 10.7 | 61.5 | 0.926 | 625 |
| 600T200-33 | 0.879 | 230 | 1.75 | 0.223 | 0.796 | 59.7 | 0.0526 | 15.3 | 3.56 | 0.624 | 5.46 | 1.12 | 57.4 | 227 | 26.6 | 16.6 | 67.1 | 0.843 | 1039 |
| 600T200-43 | 1.146 | 230 | 2.28 | 0.291 | 1.04 | 59.8 | 0.0680 | 15.3 | 7.83 | 0.857 | 9.26 | 1.89 | 127 | 295 | 26.5 | 16.6 | 67.1 | 0.844 | 1039 |
| 600T200-54 | 1.438 | 345 | 2.86 | 0.365 | 1.31 | 59.9 | 0.0847 | 15.2 | 15.5 | 1.09 | 11.7 | 3.65 | 251 | 371 | 26.4 | 16.5 | 67.3 | 0.846 | 843 |
| 600T200-68 | 1.811 | 345 | 3.60 | 0.459 | 1.66 | 60.1 | 0.106 | 15.2 | 30.5 | 1.46 | 15.9 | 4.95 | 502 | 469 | 26.2 | 16.4 | 67.3 | 0.849 | 846 |
| 600T200-97 | 2.583 | 345 | 5.14 | 0.655 | 2.40 | 60.6 | 0.148 | 15.0 | 62.0 | 2.29 | 25.7 | 7.97 | 1456 | 674 | 25.8 | 16.1 | 67.6 | 0.854 | 848 |
| 600T300-33 | 0.879 | 230 | 2.10 | 0.268 | 1.07 | 63.1 | 0.160 | 24.4 | 3.54 | 0.678 | 5.42 | 1.11 | 68.9 | 677 | 47.1 | 28.2 | 82.3 | 0.674 | 1557 |
| 600T300-43 | 1.146 | 230 | 2.74 | 0.349 | 1.39 | 63.1 | 0.207 | 24.4 | 7.82 | 0.995 | 9.10 | 1.86 | 153 | 880 | 46.9 | 28.2 | 82.3 | 0.675 | 1560 |
| 600T300-54 | 1.438 | 345 | 3.44 | 0.438 | 1.75 | 63.3 | 0.259 | 24.3 | 15.5 | 1.27 | 11.8 | 3.67 | 302 | 1109 | 46.8 | 28.1 | 82.3 | 0.677 | 1267 |
| 600T300-68 | 1.811 | 345 | 4.33 | 0.551 | 2.23 | 63.6 | 0.324 | 24.2 | 30.4 | 1.71 | 17.3 | 5.35 | 603 | 1407 | 46.6 | 27.9 | 82.6 | 0.681 | 1270 |
| 600T300-97 | 2.583 | 345 | 6.17 | 0.786 | 3.23 | 64.1 | 0.456 | 24.1 | 61.9 | 2.74 | 28.2 | 8.76 | 1748 | 2036 | 46.1 | 27.7 | 82.6 | 0.688 | 1280 |
| 800T125-43 | 1.146 | 230 | 2.40 | 0.305 | 1.57 | 71.7 | 0.0191 | 7.90 | 5.87 | 1.39 | 10.5 | 2.15 | 134 | 158 | 11.1 | 7.42 | 72.9 | 0.977 | 605 |
| 800T125-54 | 1.438 | 345 | 3.01 | 0.383 | 1.98 | 71.8 | 0.0236 | 7.85 | 11.6 | 1.77 | 13.5 | 4.19 | 264 | 197 | 11.0 | 7.34 | 73.2 | 0.977 | 490 |
| 800T125-68 | 1.811 | 345 | 3.79 | 0.483 | 2.50 | 72.0 | 0.0293 | 7.80 | 23.3 | 2.43 | 19.9 | 6.18 | 527 | 247 | 10.8 | 7.26 | 73.2 | 0.978 | 488 |
| 800T125-97 | 2.583 | 345 | 5.40 | 0.688 | 3.59 | 72.2 | 0.0402 | 7.65 | 62.0 | 3.59 | 33.8 | 10.5 | 1529 | 348 | 10.6 | 7.09 | 73.4 | 0.979 | 485 |

Bailey Metal Products, Dass Metal Products, DCM Metal Corp., EB Metal Inc., Imperial Building Products, Manugypse, Groupe UP, Trebor Building Products Ltd.

| | | | GROSS | | | | | | | EFFECTIVE | | | TORSIONAL | | | | | | |
|---|---|---|---|---|---|---|---|---|---|---|---|---|---|---|---|---|---|---|---|
| Track Designation | Base Design Thickness (mm) | $F_y$ (MPa) | Mass (kg/m) | Area (E+03) ($mm^2$) | $I_x$ (E+06) ($mm^4$) | $r_x$ (mm) | $I_y$ (E+06) ($mm^4$) | $r_y$ (mm) | $V_{rg}$ (kN) | $I_{xd}$ (E+06) ($mm^4$) | $S_{xe}$ (E+03) ($mm^3$) | $M_{rx}$ (kN-m) | J ($mm^4$) | $C_w$ (E+06) ($mm^6$) | $x_o$ (mm) | m (mm) | $r_o$ (mm) | ß | $L_u$ (mm) |
| 800T150-43 | 1.146 | 230 | 2.51 | 0.320 | 1.72 | 73.4 | 0.0322 | 10.0 | 5.87 | 1.47 | 10.7 | 2.20 | 140 | 261 | 14.8 | 9.80 | 75.7 | 0.479 | 744 |
| 800T150-54 | 1.438 | 345 | 3.15 | 0.401 | 2.17 | 73.6 | 0.0400 | 9.98 | 11.6 | 1.87 | 13.8 | 4.29 | 276 | 326 | 14.7 | 9.73 | 75.7 | 0.962 | 605 |
| 800T150-68 | 1.811 | 345 | 3.97 | 0.505 | 2.74 | 73.7 | 0.0497 | 9.91 | 23.3 | 2.58 | 20.6 | 6.38 | 552 | 410 | 14.6 | 9.63 | 75.7 | 0.963 | 602 |
| 800T150-97 | 2.583 | 345 | 5.65 | 0.720 | 3.95 | 74.0 | 0.0688 | 9.78 | 62.0 | 3.95 | 35.9 | 11.1 | 1602 | 581 | 14.3 | 9.45 | 75.9 | 0.965 | 602 |
| 800T200-43 | 1.146 | 230 | 2.74 | 0.349 | 2.03 | 76.4 | 0.0728 | 14.5 | 5.87 | 1.59 | 11.1 | 2.27 | 153 | 570 | 23.2 | 14.9 | 81.0 | 0.918 | 1024 |
| 800T200-54 | 1.438 | 345 | 3.44 | 0.438 | 2.56 | 76.5 | 0.0907 | 14.4 | 11.6 | 2.03 | 14.3 | 4.43 | 302 | 715 | 23.1 | 14.8 | 81.3 | 0.919 | 831 |
| 800T200-68 | 1.811 | 345 | 4.33 | 0.551 | 3.24 | 76.7 | 0.113 | 14.3 | 23.3 | 2.83 | 21.5 | 6.66 | 603 | 901 | 22.9 | 14.7 | 81.3 | 0.921 | 831 |
| 800T200-97 | 2.583 | 345 | 6.17 | 0.786 | 4.67 | 77.1 | 0.158 | 14.2 | 62.0 | 4.48 | 38.5 | 11.9 | 1748 | 1287 | 22.6 | 14.5 | 81.5 | 0.923 | 831 |
| 800T300-43 | 1.146 | 230 | 3.20 | 0.407 | 2.65 | 80.7 | 0.225 | 23.5 | 5.85 | 1.91 | 12.1 | 2.47 | 178 | 1700 | 42.1 | 26.0 | 94.0 | 0.800 | 1560 |
| 800T300-54 | 1.438 | 345 | 4.01 | 0.511 | 3.34 | 80.9 | 0.281 | 23.4 | 11.6 | 2.46 | 15.7 | 4.86 | 352 | 2138 | 42.0 | 25.9 | 94.0 | 0.801 | 1267 |
| 800T300-68 | 1.811 | 345 | 5.05 | 0.643 | 4.23 | 81.1 | 0.351 | 23.4 | 23.2 | 3.35 | 25.4 | 7.87 | 703 | 2703 | 41.8 | 25.8 | 94.2 | 0.803 | 1267 |
| 800T300-97 | 2.583 | 345 | 7.20 | 0.917 | 6.11 | 81.6 | 0.494 | 23.2 | 61.9 | 5.27 | 42.4 | 13.1 | 2040 | 3886 | 41.4 | 25.6 | 94.5 | 0.808 | 1273 |
| 1000T125-54 | 1.438 | 345 | 3.58 | 0.456 | 3.47 | 87.2 | 0.0244 | 7.32 | 9.25 | 2.97 | 17.3 | 5.36 | 314 | 326 | 9.55 | 6.50 | 88.1 | 0.988 | 470 |
| 1000T125-68 | 1.811 | 345 | 4.51 | 0.574 | 4.38 | 87.3 | 0.0303 | 7.26 | 18.5 | 4.10 | 25.8 | 8.01 | 628 | 407 | 9.45 | 6.43 | 88.1 | 0.989 | 467 |
| 1000T125-97 | 2.583 | 345 | 6.43 | 0.819 | 6.28 | 87.6 | 0.0416 | 7.14 | 54.1 | 6.28 | 45.1 | 14.0 | 1821 | 570 | 9.22 | 6.27 | 88.4 | 0.989 | 465 |
| 1000T150-54 | 1.438 | 345 | 3.72 | 0.474 | 3.77 | 89.2 | 0.0415 | 9.35 | 9.25 | 3.11 | 17.7 | 5.48 | 327 | 541 | 12.9 | 8.69 | 90.7 | 0.980 | 584 |
| 1000T150-68 | 1.811 | 345 | 4.69 | 0.597 | 4.76 | 89.3 | 0.0516 | 9.30 | 18.5 | 4.33 | 26.6 | 8.24 | 653 | 677 | 12.8 | 8.61 | 90.7 | 0.980 | 584 |
| 1000T150-97 | 2.583 | 345 | 6.68 | 0.852 | 6.83 | 89.6 | 0.0714 | 9.17 | 54.1 | 6.83 | 47.6 | 14.8 | 1894 | 955 | 12.6 | 8.43 | 90.9 | 0.981 | 582 |
| 1000T200-54 | 1.438 | 345 | 4.01 | 0.511 | 4.38 | 92.6 | 0.0949 | 13.6 | 9.25 | 3.34 | 18.2 | 5.65 | 352 | 1191 | 20.5 | 13.5 | 95.8 | 0.954 | 813 |
| 1000T200-68 | 1.811 | 345 | 5.05 | 0.643 | 5.53 | 92.7 | 0.118 | 13.6 | 18.5 | 4.70 | 27.6 | 8.56 | 703 | 1497 | 20.4 | 13.4 | 96.0 | 0.955 | 813 |
| 1000T200-97 | 2.583 | 345 | 7.20 | 0.917 | 7.94 | 93.1 | 0.165 | 13.4 | 54.1 | 7.65 | 50.5 | 15.7 | 2040 | 2128 | 20.1 | 13.2 | 96.3 | 0.956 | 810 |
| 1000T300-54 | 1.438 | 345 | 4.58 | 0.584 | 5.59 | 97.8 | 0.297 | 22.6 | 9.25 | 3.90 | 19.5 | 6.05 | 402 | 3569 | 38.1 | 24.1 | 107 | 0.874 | 1260 |
| 1000T300-68 | 1.811 | 345 | 5.77 | 0.735 | 7.07 | 98.0 | 0.372 | 22.5 | 18.5 | 5.72 | 31.2 | 9.67 | 804 | 4504 | 37.9 | 24.0 | 107 | 0.876 | 1260 |
| 1000T300-97 | 2.583 | 345 | 8.23 | 1.05 | 10.2 | 98.5 | 0.523 | 22.4 | 54.0 | 8.89 | 58.8 | 18.2 | 2332 | 6447 | 37.5 | 23.7 | 108 | 0.879 | 1260 |
| 1200T125-68 | 1.811 | 345 | 5.23 | 0.666 | 7.00 | 103 | 0.0310 | 6.81 | 15.4 | 6.29 | 31.7 | 9.83 | 728 | 610 | 8.36 | 5.77 | 103 | 0.993 | 450 |
| 1200T125-97 | 2.583 | 345 | 7.46 | 0.950 | 10.0 | 103 | 0.0426 | 6.71 | 45.0 | 9.81 | 56.4 | 17.5 | 2113 | 852 | 8.18 | 5.64 | 103 | 0.994 | 447 |
| 1200T150-68 | 1.811 | 345 | 5.41 | 0.689 | 7.55 | 105 | 0.0530 | 8.76 | 15.4 | 6.60 | 32.6 | 10.1 | 754 | 1019 | 11.4 | 7.80 | 106 | 0.988 | 564 |
| 1200T150-97 | 2.583 | 345 | 7.71 | 0.983 | 10.8 | 105 | 0.0734 | 8.64 | 45.0 | 10.6 | 59.3 | 18.4 | 2186 | 1433 | 11.2 | 7.65 | 106 | 0.989 | 561 |
| 1200T200-68 | 1.811 | 345 | 5.77 | 0.735 | 8.65 | 108 | 0.122 | 12.9 | 15.4 | 7.11 | 33.7 | 10.5 | 804 | 2264 | 18.4 | 12.3 | 111 | 0.972 | 792 |
| 1200T200-97 | 2.583 | 345 | 8.23 | 1.05 | 12.4 | 109 | 0.171 | 12.8 | 45.0 | 11.7 | 62.6 | 19.4 | 2332 | 3208 | 18.1 | 12.1 | 111 | 0.973 | 790 |
| 1200T300-68 | 1.811 | 345 | 6.49 | 0.827 | 10.9 | 115 | 0.388 | 21.6 | 15.4 | 7.92 | 35.0 | 10.9 | 904 | 6840 | 34.8 | 22.4 | 122 | 0.918 | 1245 |
| 1200T300-97 | 2.583 | 345 | 9.26 | 1.18 | 15.6 | 115 | 0.546 | 21.5 | 44.9 | 13.4 | 66.4 | 20.6 | 2624 | 9763 | 34.4 | 22.1 | 122 | 0.920 | 1245 |
| 1400T125-68 | 1.811 | 345 | 5.95 | 0.758 | 10.5 | 118 | 0.0315 | 6.45 | 13.2 | 9.00 | 37.6 | 11.7 | 829 | 856 | 7.52 | 5.23 | 118 | 0.996 | 434 |
| 1400T125-97 | 2.583 | 345 | 8.49 | 1.08 | 15.0 | 118 | 0.0433 | 6.32 | 38.5 | 14.2 | 67.7 | 21.0 | 2405 | 1194 | 7.34 | 5.11 | 118 | 0.996 | 429 |
| 1400T150-68 | 1.811 | 345 | 6.13 | 0.781 | 11.2 | 120 | 0.0541 | 8.33 | 13.2 | 9.41 | 38.5 | 12.0 | 854 | 1436 | 10.3 | 7.11 | 121 | 0.993 | 546 |
| 1400T150-97 | 2.583 | 345 | 8.74 | 1.11 | 16.1 | 120 | 0.0748 | 8.20 | 38.5 | 15.3 | 71.0 | 22.0 | 2478 | 2015 | 10.1 | 6.99 | 121 | 0.993 | 541 |
| 1400T200-68 | 1.811 | 345 | 6.49 | 0.827 | 12.7 | 124 | 0.125 | 12.3 | 13.2 | 10.1 | 39.9 | 12.4 | 904 | 3207 | 16.8 | 11.3 | 126 | 0.982 | 775 |
| 1400T200-97 | 2.583 | 345 | 9.26 | 1.18 | 18.2 | 124 | 0.175 | 12.2 | 38.5 | 16.8 | 74.7 | 23.2 | 2624 | 4534 | 16.5 | 11.2 | 126 | 0.983 | 770 |
| 1400T300-68 | 1.811 | 345 | 7.22 | 0.919 | 15.7 | 131 | 0.401 | 20.9 | 13.2 | 11.1 | 41.3 | 12.8 | 1005 | 9736 | 32.1 | 21.0 | 136 | 0.944 | 1229 |
| 1400T300-97 | 2.583 | 345 | 10.3 | 1.31 | 22.5 | 131 | 0.563 | 20.7 | 38.4 | 18.9 | 78.9 | 24.5 | 2916 | 13868 | 31.8 | 20.8 | 136 | 0.946 | 1227 |

Bailey Metal Products, Dass Metal Products, DCM Metal Corp., EB Metal Inc., Imperial Building Products, Manugypse, Groupe UP, Trebor Building Products Ltd.

## Curtain Wall Limiting Height Tables - Single and Double Spans

### Table Notes

1. For wind load deflection calculations, the SLS importance factor, $I_w$ = 0.75 is incorporated in the load tables.
2. Studs must be braced against rotation and lateral displacement at all supports.
3. Studs are assumed to be adequately braced at a maximum spacing of $L_u$ to develop the full factored moment
4. Web crippling check is based on 32 mm of bearing at end supports and 76 mm of bearing at interior supports.
5. Shear and web crippling resistance at end supports have not been reduced for punchouts. At interior supports, the shear and web crippling resistance has been reduced for the presence of punchout adjacent to the support.
6. Combined bending and shear check at interior support is based on the unreinforced web as per S136-16 (Eq. H2-1). Shear resistance and combined bending and shear checks at interior supports have been reduced for the presence of punchouts adjacent to the support.
7. In the "Double Span" tables, the listed span is the distance from either end to the centre of the interior support with the stud continuous past the interior support.

Bailey Metal Products, Dass Metal Products, DCM Metal Corp., EB Métal Inc., Imperial Building Products, Manugypse, Groupe UP, Trebor Building Products Ltd.

## SINGLE SPAN CURTAIN WALL LIMITING HEIGHTS (m)

| Stud Designation | Specified Loads $F_y$ (MPa) | Spacing (mm) | 0.25 kPa | | | 0.50 kPa | | | 0.75 kPa | | | 1.00 kPa | | | 1.25 kPa | | | 1.50 kPa | | |
|---|---|---|---|---|---|---|---|---|---|---|---|---|---|---|---|---|---|---|---|---|
| | | | L/120 | L/240 | L/360 | L/240 | L/360 | L/600 | L/240 | L/360 | L/600 | L/240 | L/360 | L/600 | L/240 | L/360 | L/600 | L/240 | L/360 | L/600 |
| **362S125-33** | 230 | 305 | 6.4 | 5.8 | 5.1 | 4.5 | 4.0 | 3.4 | 3.7 | 3.5 | 3.0 | 3.2 | 3.2 | 2.7 | 2.9 | 2.9 | 2.5 | 2.6 | 2.6 | 2.4 |
| | 230 | 406 | 5.6 | 5.3 | 4.6 | 3.9 | 3.7 | 3.1 | 3.2 | 3.2 | 2.7 | 2.8 | 2.8 | 2.4 | 2.5 | 2.5 | 2.3 | 2.3 | 2.3 | 2.1 |
| | 230 | 610 | 4.5 | 4.5 | 4.0 | 3.2 | 3.2 | 2.7 | 2.6 | 2.6 | 2.4 | 2.3 | 2.3 | 2.1 | 2.0 | 2.0 | 2.0 | 1.9 | 1.9 | 1.9 |
| **362S125-43** | 230 | 305 | 7.7 | 6.3 | 5.5 | 5.0 | 4.4 | 3.7 | 4.4 | 3.8 | 3.2 | 3.9 | 3.5 | 2.9 | 3.5 | 3.2 | 2.7 | 3.2 | 3.0 | 2.6 |
| | 230 | 406 | 6.7 | 5.7 | 5.0 | 4.6 | 4.0 | 3.4 | 3.9 | 3.5 | 2.9 | 3.3 | 3.2 | 2.7 | 3.0 | 2.9 | 2.5 | 2.7 | 2.7 | 2.3 |
| | 230 | 610 | 5.5 | 5.0 | 4.4 | 3.9 | 3.5 | 2.9 | 3.2 | 3.0 | 2.6 | 2.7 | 2.7 | 2.3 | 2.4 | 2.4 | 2.2 | 2.2 | 2.2 | 2.0 |
| **362S125-54** | 345 | 305 | 8.5 | 6.8 | 5.9 | 5.4 | 4.7 | 4.0 | 4.7 | 4.1 | 3.5 | 4.3 | 3.7 | 3.1 | 4.0 | 3.5 | 2.9 | 3.7 | 3.3 | 2.7 |
| | 345 | 406 | 7.7 | 6.1 | 5.4 | 4.9 | 4.3 | 3.6 | 4.3 | 3.7 | 3.1 | 3.9 | 3.4 | 2.9 | 3.6 | 3.1 | 2.6 | 3.4 | 3.0 | 2.5 |
| | 345 | 610 | 6.8 | 5.4 | 4.7 | 4.3 | 3.7 | 3.1 | 3.7 | 3.3 | 2.7 | 3.4 | 3.0 | 2.5 | 3.1 | 2.7 | 2.3 | 3.0 | 2.6 | 2.2 |
| **362S162-33** | 230 | 305 | 8.0 | 6.4 | 5.6 | 5.1 | 4.4 | 3.7 | 4.4 | 3.9 | 3.3 | 4.0 | 3.5 | 3.0 | 3.6 | 3.3 | 2.8 | 3.3 | 3.1 | 2.6 |
| | 230 | 406 | 7.0 | 5.8 | 5.1 | 4.6 | 4.0 | 3.4 | 4.0 | 3.5 | 3.0 | 3.5 | 3.2 | 2.7 | 3.1 | 3.0 | 2.5 | 2.9 | 2.8 | 2.4 |
| | 230 | 610 | 5.7 | 5.1 | 4.4 | 4.0 | 3.5 | 3.0 | 3.3 | 3.1 | 2.6 | 2.9 | 2.8 | 2.4 | 2.6 | 2.6 | 2.2 | 2.3 | 2.3 | 2.1 |
| **362S162-43** | 230 | 305 | 8.8 | 7.0 | 6.1 | 5.5 | 4.8 | 4.1 | 4.8 | 4.2 | 3.6 | 4.4 | 3.8 | 3.2 | 4.1 | 3.6 | 3.0 | 3.8 | 3.3 | 2.8 |
| | 230 | 406 | 8.0 | 6.3 | 5.5 | 5.0 | 4.4 | 3.7 | 4.4 | 3.8 | 3.2 | 4.0 | 3.5 | 2.9 | 3.7 | 3.2 | 2.7 | 3.4 | 3.0 | 2.6 |
| | 230 | 610 | 6.8 | 5.5 | 4.8 | 4.4 | 3.8 | 3.2 | 3.8 | 3.3 | 2.8 | 3.4 | 3.0 | 2.6 | 3.0 | 2.8 | 2.4 | 2.8 | 2.7 | 2.2 |
| **362S162-54** | 345 | 305 | 9.4 | 7.4 | 6.5 | 5.9 | 5.2 | 4.4 | 5.2 | 4.5 | 3.8 | 4.7 | 4.1 | 3.5 | 4.4 | 3.8 | 3.2 | 4.1 | 3.6 | 3.0 |
| | 345 | 406 | 8.5 | 6.8 | 5.9 | 5.4 | 4.7 | 4.0 | 4.7 | 4.1 | 3.5 | 4.3 | 3.7 | 3.1 | 4.0 | 3.5 | 2.9 | 3.7 | 3.3 | 2.7 |
| | 345 | 610 | 7.4 | 5.9 | 5.2 | 4.7 | 4.1 | 3.5 | 4.1 | 3.6 | 3.0 | 3.7 | 3.3 | 2.7 | 3.5 | 3.0 | 2.5 | 3.3 | 2.8 | 2.4 |
| **362S162-68** | 345 | 305 | 10.0 | 8.0 | 7.0 | 6.3 | 5.5 | 4.7 | 5.5 | 4.8 | 4.1 | 5.0 | 4.4 | 3.7 | 4.7 | 4.1 | 3.4 | 4.4 | 3.8 | 3.2 |
| | 345 | 406 | 9.1 | 7.2 | 6.3 | 5.7 | 5.0 | 4.2 | 5.0 | 4.4 | 3.7 | 4.6 | 4.0 | 3.4 | 4.2 | 3.7 | 3.1 | 4.0 | 3.5 | 2.9 |
| | 345 | 610 | 8.0 | 6.3 | 5.5 | 5.0 | 4.4 | 3.7 | 4.4 | 3.8 | 3.2 | 4.0 | 3.5 | 2.9 | 3.7 | 3.2 | 2.7 | 3.5 | 3.0 | 2.6 |
| **362S162-97** | 345 | 305 | 11.1 | 8.8 | 7.7 | 7.0 | 6.1 | 5.1 | 6.1 | 5.3 | 4.5 | 5.5 | 4.8 | 4.1 | 5.1 | 4.5 | 3.8 | 4.8 | 4.2 | 3.6 |
| | 345 | 406 | 10.1 | 8.0 | 7.0 | 6.3 | 5.5 | 4.7 | 5.5 | 4.8 | 4.1 | 5.0 | 4.4 | 3.7 | 4.7 | 4.1 | 3.4 | 4.4 | 3.8 | 3.2 |
| | 345 | 610 | 8.8 | 7.0 | 6.1 | 5.5 | 4.8 | 4.1 | 4.8 | 4.2 | 3.6 | 4.4 | 3.8 | 3.2 | 4.1 | 3.6 | 3.0 | 3.8 | 3.4 | 2.8 |
| **362S200-33** | 230 | 305 | 8.4 | 6.7 | 5.9 | 5.3 | 4.6 | 3.9 | 4.6 | 4.1 | 3.4 | 4.2 | 3.7 | 3.1 | 3.8 | 3.4 | 2.9 | 3.5 | 3.2 | 2.7 |
| | 230 | 406 | 7.4 | 6.1 | 5.3 | 4.8 | 4.2 | 3.6 | 4.2 | 3.7 | 3.1 | 3.7 | 3.4 | 2.8 | 3.3 | 3.1 | 2.6 | 3.0 | 2.9 | 2.5 |
| | 230 | 610 | 6.1 | 5.3 | 4.6 | 4.2 | 3.7 | 3.1 | 3.5 | 3.2 | 2.7 | 3.0 | 2.9 | 2.5 | 2.7 | 2.7 | 2.3 | 2.5e | 2.5e | 2.2 |
| **362S200-43** | 230 | 305 | 9.2 | 7.3 | 6.4 | 5.8 | 5.1 | 4.3 | 5.1 | 4.4 | 3.7 | 4.6 | 4.0 | 3.4 | 4.3 | 3.7 | 3.2 | 4.0 | 3.5 | 3.0 |
| | 230 | 406 | 8.4 | 6.7 | 5.8 | 5.3 | 4.6 | 3.9 | 4.6 | 4.0 | 3.4 | 4.2 | 3.7 | 3.1 | 3.9 | 3.4 | 2.9 | 3.7 | 3.2 | 2.7 |
| | 230 | 610 | 7.3 | 5.8 | 5.1 | 4.6 | 4.0 | 3.4 | 4.0 | 3.5 | 3.0 | 3.7 | 3.2 | 2.7 | 3.3 | 3.0 | 2.5 | 3.0 | 2.8 | 2.4 |
| **362S200-54** | 345 | 305 | 9.9 | 7.9 | 6.9 | 6.2 | 5.5 | 4.6 | 5.5 | 4.8 | 4.0 | 5.0 | 4.3 | 3.7 | 4.6 | 4.0 | 3.4 | 4.3 | 3.8 | 3.2 |
| | 345 | 406 | 9.0 | 7.1 | 6.2 | 5.7 | 5.0 | 4.2 | 5.0 | 4.3 | 3.7 | 4.5 | 3.9 | 3.3 | 4.2 | 3.7 | 3.1 | 3.9 | 3.4 | 2.9 |
| | 345 | 610 | 7.9 | 6.2 | 5.5 | 5.0 | 4.3 | 3.7 | 4.3 | 3.8 | 3.2 | 3.9 | 3.4 | 2.9 | 3.7 | 3.2 | 2.7 | 3.4 | 3.0 | 2.5 |
| **362S200-68** | 345 | 305 | 10.6 | 8.4 | 7.4 | 6.7 | 5.8 | 4.9 | 5.8 | 5.1 | 4.3 | 5.3 | 4.6 | 3.9 | 4.9 | 4.3 | 3.6 | 4.6 | 4.1 | 3.4 |
| | 345 | 406 | 9.6 | 7.7 | 6.7 | 6.1 | 5.3 | 4.5 | 5.3 | 4.6 | 3.9 | 4.8 | 4.2 | 3.6 | 4.5 | 3.9 | 3.3 | 4.2 | 3.7 | 3.1 |
| | 345 | 610 | 8.4 | 6.7 | 5.8 | 5.3 | 4.6 | 3.9 | 4.6 | 4.1 | 3.4 | 4.2 | 3.7 | 3.1 | 3.9 | 3.4 | 2.9 | 3.7 | 3.2 | 2.7 |
| **362S200-97** | 345 | 305 | 11.7 | 9.3 | 8.1 | 7.4 | 6.5 | 5.5 | 6.5 | 5.6 | 4.8 | 5.9 | 5.1 | 4.3 | 5.5 | 4.8 | 4.0 | 5.1 | 4.5 | 3.8 |
| | 345 | 406 | 10.7 | 8.5 | 7.4 | 6.7 | 5.9 | 5.0 | 5.9 | 5.1 | 4.3 | 5.3 | 4.7 | 3.9 | 5.0 | 4.3 | 3.6 | 4.7 | 4.1 | 3.4 |
| | 345 | 610 | 9.3 | 7.4 | 6.5 | 5.9 | 5.1 | 4.3 | 5.1 | 4.5 | 3.8 | 4.7 | 4.1 | 3.4 | 4.3 | 3.8 | 3.2 | 4.1 | 3.6 | 3.0 |
| **362S250-33** | 230 | 305 | 8.8 | 7.0 | 6.1 | 5.5 | 4.8 | 4.1 | 4.8 | 4.2 | 3.6 | 4.4 | 3.8 | 3.2 | 4.0 | 3.6 | 3.0 | 3.6 | 3.4 | 2.8 |
| | 230 | 406 | 7.7 | 6.3 | 5.5 | 5.0 | 4.4 | 3.7 | 4.4 | 3.8 | 3.2 | 3.9 | 3.5 | 2.9 | 3.4 | 3.2 | 2.7 | 3.1 | 3.0 | 2.6 |
| | 230 | 610 | 6.3 | 5.5 | 4.8 | 4.4 | 3.8 | 3.2 | 3.6 | 3.4 | 2.8 | 3.1 | 3.0 | 2.6 | 2.8 | 2.8 | 2.4 | 2.6e | 2.6e | 2.2 |
| **362S250-43** | 230 | 305 | 9.7 | 7.7 | 6.7 | 6.1 | 5.4 | 4.5 | 5.4 | 4.7 | 3.9 | 4.9 | 4.2 | 3.6 | 4.5 | 3.9 | 3.3 | 4.2 | 3.7 | 3.1 |
| | 230 | 406 | 8.8 | 7.0 | 6.1 | 5.6 | 4.9 | 4.1 | 4.9 | 4.2 | 3.6 | 4.4 | 3.9 | 3.3 | 4.1 | 3.6 | 3.0 | 3.8 | 3.4 | 2.8 |
| | 230 | 610 | 7.5 | 6.1 | 5.4 | 4.9 | 4.2 | 3.6 | 4.2 | 3.7 | 3.1 | 3.8 | 3.4 | 2.8 | 3.4 | 3.1 | 2.6 | 3.1 | 2.9 | 2.5 |
| **362S250-54** | 345 | 305 | 10.3 | 8.2 | 7.2 | 6.5 | 5.7 | 4.8 | 5.7 | 5.0 | 4.2 | 5.2 | 4.5 | 3.8 | 4.8 | 4.2 | 3.5 | 4.5 | 3.9 | 3.3 |
| | 345 | 406 | 9.4 | 7.4 | 6.5 | 5.9 | 5.2 | 4.4 | 5.2 | 4.5 | 3.8 | 4.7 | 4.1 | 3.5 | 4.4 | 3.8 | 3.2 | 4.1 | 3.6 | 3.0 |
| | 345 | 610 | 8.2 | 6.5 | 5.7 | 5.2 | 4.5 | 3.8 | 4.5 | 3.9 | 3.3 | 4.1 | 3.6 | 3.0 | 3.8 | 3.3 | 2.8 | 3.6 | 3.1 | 2.6 |
| **362S250-68** | 345 | 305 | 11.2 | 8.9 | 7.7 | 7.0 | 6.1 | 5.2 | 6.1 | 5.4 | 4.5 | 5.6 | 4.9 | 4.1 | 5.2 | 4.5 | 3.8 | 4.9 | 4.3 | 3.6 |
| | 345 | 406 | 10.2 | 8.1 | 7.0 | 6.4 | 5.6 | 4.7 | 5.6 | 4.9 | 4.1 | 5.1 | 4.4 | 3.7 | 4.7 | 4.1 | 3.5 | 4.4 | 3.9 | 3.3 |
| | 345 | 610 | 8.9 | 7.0 | 6.1 | 5.6 | 4.9 | 4.1 | 4.9 | 4.3 | 3.6 | 4.4 | 3.9 | 3.3 | 4.1 | 3.6 | 3.0 | 3.9 | 3.4 | 2.9 |
| **362S250-97** | 345 | 305 | 12.4 | 9.9 | 8.6 | 7.8 | 6.8 | 5.8 | 6.8 | 6.0 | 5.0 | 6.2 | 5.4 | 4.6 | 5.8 | 5.0 | 4.2 | 5.4 | 4.7 | 4.0 |
| | 345 | 406 | 11.3 | 9.0 | 7.8 | 7.1 | 6.2 | 5.2 | 6.2 | 5.4 | 4.6 | 5.6 | 4.9 | 4.2 | 5.2 | 4.6 | 3.9 | 4.9 | 4.3 | 3.6 |
| | 345 | 610 | 9.9 | 7.8 | 6.8 | 6.2 | 5.4 | 4.6 | 5.4 | 4.7 | 4.0 | 4.9 | 4.3 | 3.6 | 4.6 | 4.0 | 3.4 | 4.3 | 3.8 | 3.2 |
| **362S300-33** | 230 | 305 | 9.0 | 7.2 | 6.3 | 5.7 | 5.0 | 4.2 | 5.0 | 4.3 | 3.7 | 4.5 | 3.9 | 3.3 | 4.1 | 3.7 | 3.1 | 3.7 | 3.5 | 2.9 |
| | 230 | 406 | 7.9 | 6.5 | 5.7 | 5.2 | 4.5 | 3.8 | 4.5 | 3.9 | 3.3 | 3.9 | 3.6 | 3.0 | 3.5 | 3.3 | 2.8 | 3.2 | 3.1 | 2.6 |
| | 230 | 610 | 6.4 | 5.7 | 5.0 | 4.5 | 3.9 | 3.3 | 3.7 | 3.5 | 2.9 | 3.2 | 3.1 | 2.6 | 2.9 | 2.9 | 2.5 | 2.6e | 2.6e | 2.3 |
| **362S300-43** | 230 | 305 | 10.0 | 7.9 | 6.9 | 6.3 | 5.5 | 4.6 | 5.5 | 4.8 | 4.1 | 5.0 | 4.4 | 3.7 | 4.6 | 4.1 | 3.4 | 4.4 | 3.8 | 3.2 |
| | 230 | 406 | 9.1 | 7.2 | 6.3 | 5.7 | 5.0 | 4.2 | 5.0 | 4.4 | 3.7 | 4.5 | 4.0 | 3.4 | 4.2 | 3.7 | 3.1 | 3.8 | 3.5 | 2.9 |
| | 230 | 610 | 7.6 | 6.3 | 5.5 | 5.0 | 4.4 | 3.7 | 4.4 | 3.8 | 3.2 | 3.8 | 3.5 | 2.9 | 3.4 | 3.2 | 2.7 | 3.1 | 3.0 | 2.6 |
| **362S300-54** | 345 | 305 | 10.6 | 8.4 | 7.4 | 6.7 | 5.8 | 4.9 | 5.8 | 5.1 | 4.3 | 5.3 | 4.6 | 3.9 | 4.9 | 4.3 | 3.6 | 4.6 | 4.0 | 3.4 |
| | 345 | 406 | 9.6 | 7.6 | 6.7 | 6.1 | 5.3 | 4.5 | 5.3 | 4.6 | 3.9 | 4.8 | 4.2 | 3.5 | 4.5 | 3.9 | 3.3 | 4.2 | 3.7 | 3.1 |
| | 345 | 610 | 8.4 | 6.7 | 5.8 | 5.3 | 4.6 | 3.9 | 4.6 | 4.0 | 3.4 | 4.2 | 3.7 | 3.1 | 3.9 | 3.4 | 2.9 | 3.7 | 3.2 | 2.7 |
| **362S300-68** | 345 | 305 | 11.5 | 9.2 | 8.0 | 7.3 | 6.3 | 5.4 | 6.3 | 5.5 | 4.7 | 5.8 | 5.0 | 4.2 | 5.4 | 4.7 | 3.9 | 5.0 | 4.4 | 3.7 |
| | 345 | 406 | 10.5 | 8.3 | 7.3 | 6.6 | 5.8 | 4.9 | 5.8 | 5.0 | 4.2 | 5.2 | 4.6 | 3.9 | 4.9 | 4.2 | 3.6 | 4.6 | 4.0 | 3.4 |
| | 345 | 610 | 9.2 | 7.3 | 6.3 | 5.8 | 5.0 | 4.2 | 5.0 | 4.4 | 3.7 | 4.6 | 4.0 | 3.4 | 4.2 | 3.7 | 3.1 | 4.0 | 3.5 | 2.9 |
| **362S300-97** | 345 | 305 | 13.0 | 10.3 | 9.0 | 8.2 | 7.1 | 6.0 | 7.1 | 6.2 | 5.3 | 6.5 | 5.7 | 4.8 | 6.0 | 5.3 | 4.4 | 5.7 | 5.0 | 4.2 |
| | 345 | 406 | 11.8 | 9.4 | 8.2 | 7.4 | 6.5 | 5.5 | 6.5 | 5.7 | 4.8 | 5.9 | 5.1 | 4.3 | 5.5 | 4.8 | 4.0 | 5.1 | 4.5 | 3.8 |
| | 345 | 610 | 10.3 | 8.2 | 7.1 | 6.5 | 5.7 | 4.8 | 5.7 | 5.0 | 4.2 | 5.1 | 4.5 | 3.8 | 4.8 | 4.2 | 3.5 | 4.5 | 3.9 | 3.3 |

**NOTES:**

1) $p = I_w \{qC_eC_gC_p\}$; $I_w$ of 0.75 has been incorpotated in the deflection values of the table.
The parameters in the bracket { } must be determined by the design professional in accordance with the NBCC.

2) "e" web stiffeners required at ends.

Bailey Metal Products, Dass Metal Products, DCM Metal Corp., EB Métal Inc., Imperial Building Products, Manugypse, Groupe UP, Trebor Building Products Ltd.

## SINGLE SPAN CURTAIN WALL LIMITING HEIGHTS (m)

| Stud Designation | Specified Loads $F_y$ (MPa) | Spacing (mm) | 0.25 kPa | | | 0.50 kPa | | | 0.75 kPa | | | 1.00 kPa | | | 1.25 kPa | | | 1.50 kPa | | |
|---|---|---|---|---|---|---|---|---|---|---|---|---|---|---|---|---|---|---|---|---|
| | | | L/120 | L/240 | L/360 | L/240 | L/360 | L/600 | L/240 | L/360 | L/600 | L/240 | L/360 | L/600 | L/240 | L/360 | L/600 | L/240 | L/360 | L/600 |
| **400S125-33** | 230 | 305 | 6.8 | 6.3 | 5.5 | 4.8 | 4.4 | 3.7 | 3.9 | 3.8 | 3.2 | 3.4 | 3.4 | 2.9 | 3.0 | 3.0 | 2.7 | 2.8 | 2.8 | 2.5 |
| | 230 | 406 | 5.9 | 5.7 | 5.0 | 4.2 | 4.0 | 3.3 | 3.4 | 3.4 | 2.9 | 3.0 | 3.0 | 2.6 | 2.6 | 2.6 | 2.5 | 2.4 | 2.4 | 2.3 |
| | 230 | 610 | 4.8 | 4.8 | 4.4 | 3.4 | 3.4 | 2.9 | 2.8 | 2.8 | 2.5 | 2.4 | 2.4 | 2.3 | 2.2 | 2.2 | 2.1 | 2.0 | 2.0 | 2.0 |
| **400S125-43** | 230 | 305 | 8.2 | 6.8 | 6.0 | 5.4 | 4.7 | 4.0 | 4.7 | 4.1 | 3.5 | 4.1 | 3.8 | 3.2 | 3.7 | 3.5 | 2.9 | 3.3 | 3.3 | 2.8 |
| | 230 | 406 | 7.1 | 6.2 | 5.4 | 4.9 | 4.3 | 3.6 | 4.1 | 3.8 | 3.2 | 3.6 | 3.4 | 2.9 | 3.2 | 3.2 | 2.7 | 2.9 | 2.9 | 2.5 |
| | 230 | 610 | 5.8 | 5.4 | 4.7 | 4.1 | 3.8 | 3.2 | 3.3 | 3.3 | 2.8 | 2.9 | 2.9 | 2.5 | 2.6 | 2.6 | 2.3 | 2.4 | 2.4 | 2.2 |
| **400S125-54** | 345 | 305 | 9.2 | 7.3 | 6.4 | 5.8 | 5.1 | 4.3 | 5.1 | 4.4 | 3.7 | 4.6 | 4.0 | 3.4 | 4.3 | 3.7 | 3.2 | 4.0 | 3.5 | 3.0 |
| | 345 | 406 | 8.4 | 6.6 | 5.8 | 5.3 | 4.6 | 3.9 | 4.6 | 4.0 | 3.4 | 4.2 | 3.7 | 3.1 | 3.9 | 3.4 | 2.9 | 3.7 | 3.2 | 2.7 |
| | 345 | 610 | 7.3 | 5.8 | 5.1 | 4.6 | 4.0 | 3.4 | 4.0 | 3.5 | 3.0 | 3.7 | 3.2 | 2.7 | 3.4 | 3.0 | 2.5 | 3.2 | 2.8 | 2.4 |
| **400S162-33** | 230 | 305 | 8.6 | 6.9 | 6.0 | 5.5 | 4.8 | 4.0 | 4.8 | 4.2 | 3.5 | 4.3 | 3.8 | 3.2 | 3.8 | 3.5 | 3.0 | 3.5 | 3.3 | 2.8 |
| | 230 | 406 | 7.4 | 6.3 | 5.5 | 5.0 | 4.3 | 3.7 | 4.3 | 3.8 | 3.2 | 3.7 | 3.4 | 2.9 | 3.3 | 3.2 | 2.7 | 3.0 | 3.0 | 2.5 |
| | 230 | 610 | 6.1 | 5.5 | 4.8 | 4.3 | 3.8 | 3.2 | 3.5 | 3.3 | 2.8 | 3.0 | 3.0 | 2.5 | 2.7 | 2.7 | 2.4 | 2.5e | 2.5e | 2.2 |
| **400S162-43** | 230 | 305 | 9.5 | 7.5 | 6.6 | 6.0 | 5.2 | 4.4 | 5.2 | 4.5 | 3.8 | 4.7 | 4.1 | 3.5 | 4.4 | 3.8 | 3.2 | 4.1 | 3.6 | 3.0 |
| | 230 | 406 | 8.6 | 6.8 | 6.0 | 5.4 | 4.7 | 4.0 | 4.7 | 4.1 | 3.5 | 4.3 | 3.8 | 3.2 | 3.9 | 3.5 | 2.9 | 3.6 | 3.3 | 2.8 |
| | 230 | 610 | 7.2 | 6.0 | 5.2 | 4.7 | 4.1 | 3.5 | 4.1 | 3.6 | 3.0 | 3.6 | 3.3 | 2.8 | 3.2 | 3.0 | 2.6 | 2.9 | 2.9 | 2.4 |
| **400S162-54** | 345 | 305 | 10.1 | 8.0 | 7.0 | 6.4 | 5.6 | 4.7 | 5.6 | 4.9 | 4.1 | 5.1 | 4.4 | 3.7 | 4.7 | 4.1 | 3.5 | 4.4 | 3.9 | 3.3 |
| | 345 | 406 | 9.2 | 7.3 | 6.4 | 5.8 | 5.1 | 4.3 | 5.1 | 4.4 | 3.7 | 4.6 | 4.0 | 3.4 | 4.3 | 3.7 | 3.1 | 4.0 | 3.5 | 3.0 |
| | 345 | 610 | 8.0 | 6.4 | 5.6 | 5.1 | 4.4 | 3.7 | 4.4 | 3.9 | 3.3 | 4.0 | 3.5 | 3.0 | 3.7 | 3.3 | 2.7 | 3.5 | 3.1 | 2.6 |
| **400S162-68** | 345 | 305 | 10.8 | 8.6 | 7.5 | 6.8 | 6.0 | 5.0 | 6.0 | 5.2 | 4.4 | 5.4 | 4.7 | 4.0 | 5.0 | 4.4 | 3.7 | 4.7 | 4.1 | 3.5 |
| | 345 | 406 | 9.8 | 7.8 | 6.8 | 6.2 | 5.4 | 4.6 | 5.4 | 4.7 | 4.0 | 4.9 | 4.3 | 3.6 | 4.6 | 4.0 | 3.4 | 4.3 | 3.8 | 3.2 |
| | 345 | 610 | 8.6 | 6.8 | 6.0 | 5.4 | 4.7 | 4.0 | 4.7 | 4.1 | 3.5 | 4.3 | 3.8 | 3.2 | 4.0 | 3.5 | 2.9 | 3.8 | 3.3 | 2.8 |
| **400S162-97** | 345 | 305 | 12.0 | 9.5 | 8.3 | 7.5 | 6.6 | 5.6 | 6.6 | 5.8 | 4.9 | 6.0 | 5.2 | 4.4 | 5.6 | 4.9 | 4.1 | 5.2 | 4.6 | 3.9 |
| | 345 | 406 | 10.9 | 8.6 | 7.5 | 6.9 | 6.0 | 5.0 | 6.0 | 5.2 | 4.4 | 5.4 | 4.8 | 4.0 | 5.0 | 4.4 | 3.7 | 4.8 | 4.1 | 3.5 |
| | 345 | 610 | 9.5 | 7.5 | 6.6 | 6.0 | 5.2 | 4.4 | 5.2 | 4.6 | 3.9 | 4.8 | 4.1 | 3.5 | 4.4 | 3.9 | 3.2 | 4.1 | 3.6 | 3.1 |
| **400S200-33** | 230 | 305 | 9.1 | 7.2 | 6.3 | 5.7 | 5.0 | 4.2 | 5.0 | 4.4 | 3.7 | 4.5 | 4.0 | 3.4 | 4.1 | 3.7 | 3.1 | 3.7 | 3.5 | 2.9 |
| | 230 | 406 | 7.9 | 6.6 | 5.7 | 5.2 | 4.6 | 3.8 | 4.5 | 4.0 | 3.4 | 3.9 | 3.6 | 3.0 | 3.5 | 3.4 | 2.8 | 3.2 | 3.2 | 2.7 |
| | 230 | 610 | 6.4 | 5.7 | 5.0 | 4.5 | 4.0 | 3.4 | 3.7 | 3.5 | 2.9 | 3.2 | 3.2 | 2.7 | 2.9e | 2.9e | 2.5 | 2.6e | 2.6e | 2.3 |
| **400S200-43** | 230 | 305 | 10.0 | 7.9 | 6.9 | 6.3 | 5.5 | 4.6 | 5.5 | 4.8 | 4.0 | 5.0 | 4.4 | 3.7 | 4.6 | 4.0 | 3.4 | 4.4 | 3.8 | 3.2 |
| | 230 | 406 | 9.1 | 7.2 | 6.3 | 5.7 | 5.0 | 4.2 | 5.0 | 4.4 | 3.7 | 4.5 | 4.0 | 3.3 | 4.2 | 3.7 | 3.1 | 3.9 | 3.5 | 2.9 |
| | 230 | 610 | 7.7 | 6.3 | 5.5 | 5.0 | 4.4 | 3.7 | 4.4 | 3.8 | 3.2 | 3.9 | 3.5 | 2.9 | 3.5 | 3.2 | 2.7 | 3.2 | 3.0 | 2.5 |
| **400S200-54** | 345 | 305 | 10.7 | 8.5 | 7.4 | 6.7 | 5.9 | 5.0 | 5.9 | 5.1 | 4.3 | 5.3 | 4.7 | 3.9 | 5.0 | 4.3 | 3.7 | 4.7 | 4.1 | 3.4 |
| | 345 | 406 | 9.7 | 7.7 | 6.7 | 6.1 | 5.3 | 4.5 | 5.3 | 4.7 | 3.9 | 4.9 | 4.2 | 3.6 | 4.5 | 3.9 | 3.3 | 4.2 | 3.7 | 3.1 |
| | 345 | 610 | 8.5 | 6.7 | 5.9 | 5.3 | 4.7 | 3.9 | 4.7 | 4.1 | 3.4 | 4.2 | 3.7 | 3.1 | 3.9 | 3.4 | 2.9 | 3.7 | 3.2 | 2.7 |
| **400S200-68** | 345 | 305 | 11.5 | 9.1 | 7.9 | 7.2 | 6.3 | 5.3 | 6.3 | 5.5 | 4.6 | 5.7 | 5.0 | 4.2 | 5.3 | 4.6 | 3.9 | 5.0 | 4.4 | 3.7 |
| | 345 | 406 | 10.4 | 8.3 | 7.2 | 6.6 | 5.7 | 4.8 | 5.7 | 5.0 | 4.2 | 5.2 | 4.5 | 3.8 | 4.8 | 4.2 | 3.6 | 4.5 | 4.0 | 3.3 |
| | 345 | 610 | 9.1 | 7.2 | 6.3 | 5.7 | 5.0 | 4.2 | 5.0 | 4.4 | 3.7 | 4.5 | 4.0 | 3.3 | 4.2 | 3.7 | 3.1 | 4.0 | 3.5 | 2.9 |
| **400S200-97** | 345 | 305 | 12.7 | 10.1 | 8.8 | 8.0 | 7.0 | 5.9 | 7.0 | 6.1 | 5.1 | 6.3 | 5.5 | 4.7 | 5.9 | 5.1 | 4.3 | 5.5 | 4.8 | 4.1 |
| | 345 | 406 | 11.5 | 9.1 | 8.0 | 7.3 | 6.3 | 5.3 | 6.3 | 5.5 | 4.7 | 5.8 | 5.0 | 4.2 | 5.3 | 4.7 | 3.9 | 5.0 | 4.4 | 3.7 |
| | 345 | 610 | 10.1 | 8.0 | 7.0 | 6.3 | 5.5 | 4.7 | 5.5 | 4.8 | 4.1 | 5.0 | 4.4 | 3.7 | 4.7 | 4.1 | 3.4 | 4.4 | 3.8 | 3.2 |
| **400S250-33** | 230 | 305 | 9.4 | 7.5 | 6.6 | 6.0 | 5.2 | 4.4 | 5.2 | 4.5 | 3.8 | 4.7 | 4.1 | 3.5 | 4.2 | 3.8 | 3.2 | 3.8 | 3.6 | 3.0 |
| | 230 | 406 | 8.1 | 6.8 | 6.0 | 5.4 | 4.7 | 4.0 | 4.7 | 4.1 | 3.5 | 4.1 | 3.8 | 3.2 | 3.6 | 3.5 | 2.9 | 3.3 | 3.3 | 2.8 |
| | 230 | 610 | 6.7 | 6.0 | 5.2 | 4.7 | 4.1 | 3.5 | 3.8 | 3.6 | 3.0 | 3.3 | 3.3 | 2.8 | 3.0e | 3.0e | 2.6 | 2.7e | 2.7e | 2.4e |
| **400S250-43** | 230 | 305 | 10.5 | 8.3 | 7.3 | 6.6 | 5.8 | 4.9 | 5.8 | 5.0 | 4.2 | 5.2 | 4.6 | 3.9 | 4.9 | 4.2 | 3.6 | 4.6 | 4.0 | 3.4 |
| | 230 | 406 | 9.5 | 7.6 | 6.6 | 6.0 | 5.2 | 4.4 | 5.2 | 4.6 | 3.9 | 4.8 | 4.2 | 3.5 | 4.4 | 3.9 | 3.3 | 4.0 | 3.6 | 3.1 |
| | 230 | 610 | 7.9 | 6.6 | 5.8 | 5.2 | 4.6 | 3.9 | 4.6 | 4.0 | 3.4 | 4.0 | 3.6 | 3.1 | 3.6 | 3.4 | 2.8 | 3.2 | 3.2 | 2.7 |
| **400S250-54** | 345 | 305 | 11.1 | 8.8 | 7.7 | 7.0 | 6.1 | 5.2 | 6.1 | 5.3 | 4.5 | 5.6 | 4.9 | 4.1 | 5.2 | 4.5 | 3.8 | 4.9 | 4.2 | 3.6 |
| | 345 | 406 | 10.1 | 8.0 | 7.0 | 6.4 | 5.6 | 4.7 | 5.6 | 4.9 | 4.1 | 5.0 | 4.4 | 3.7 | 4.7 | 4.1 | 3.5 | 4.4 | 3.9 | 3.2 |
| | 345 | 610 | 8.8 | 7.0 | 6.1 | 5.6 | 4.9 | 4.1 | 4.9 | 4.2 | 3.6 | 4.4 | 3.9 | 3.2 | 4.1 | 3.6 | 3.0 | 3.9 | 3.4 | 2.8 |
| **400S250-68** | 345 | 305 | 12.0 | 9.6 | 8.3 | 7.6 | 6.6 | 5.6 | 6.6 | 5.8 | 4.9 | 6.0 | 5.3 | 4.4 | 5.6 | 4.9 | 4.1 | 5.3 | 4.6 | 3.9 |
| | 345 | 406 | 10.9 | 8.7 | 7.6 | 6.9 | 6.0 | 5.1 | 6.0 | 5.3 | 4.4 | 5.5 | 4.8 | 4.0 | 5.1 | 4.4 | 3.7 | 4.8 | 4.2 | 3.5 |
| | 345 | 610 | 9.6 | 7.6 | 6.6 | 6.0 | 5.3 | 4.4 | 5.3 | 4.6 | 3.9 | 4.8 | 4.2 | 3.5 | 4.4 | 3.9 | 3.3 | 4.2 | 3.6 | 3.1 |
| **400S250-97** | 345 | 305 | 13.4 | 10.6 | 9.3 | 8.4 | 7.4 | 6.2 | 7.4 | 6.4 | 5.4 | 6.7 | 5.9 | 4.9 | 6.2 | 5.4 | 4.6 | 5.9 | 5.1 | 4.3 |
| | 345 | 406 | 12.2 | 9.7 | 8.4 | 7.7 | 6.7 | 5.6 | 6.7 | 5.9 | 4.9 | 6.1 | 5.3 | 4.5 | 5.6 | 4.9 | 4.2 | 5.3 | 4.6 | 3.9 |
| | 345 | 610 | 10.6 | 8.4 | 7.4 | 6.7 | 5.9 | 4.9 | 5.9 | 5.1 | 4.3 | 5.3 | 4.6 | 3.9 | 4.9 | 4.3 | 3.6 | 4.6 | 4.1 | 3.4 |
| **400S300-33** | 230 | 305 | 9.6 | 7.7 | 6.7 | 6.1 | 5.4 | 4.5 | 5.4 | 4.7 | 3.9 | 4.8 | 4.3 | 3.6 | 4.3 | 3.9 | 3.3 | 3.9 | 3.7 | 3.1 |
| | 230 | 406 | 8.3 | 7.0 | 6.1 | 5.6 | 4.9 | 4.1 | 4.8 | 4.3 | 3.6 | 4.2 | 3.9 | 3.3 | 3.7 | 3.6 | 3.0 | 3.4 | 3.4 | 2.8 |
| | 230 | 610 | 6.8 | 6.1 | 5.4 | 4.8 | 4.3 | 3.6 | 3.9 | 3.7 | 3.1 | 3.4 | 3.4 | 2.8 | 3.0e | 3.0e | 2.6 | 2.8e | 2.8e | 2.5e |
| **400S300-43** | 230 | 305 | 10.8 | 8.5 | 7.5 | 6.8 | 5.9 | 5.0 | 5.9 | 5.2 | 4.4 | 5.4 | 4.7 | 4.0 | 5.0 | 4.4 | 3.7 | 4.6 | 4.1 | 3.5 |
| | 230 | 406 | 9.8 | 7.8 | 6.8 | 6.2 | 5.4 | 4.5 | 5.4 | 4.7 | 4.0 | 4.9 | 4.3 | 3.6 | 4.4 | 4.0 | 3.3 | 4.0 | 3.7 | 3.1 |
| | 230 | 610 | 8.0 | 6.8 | 5.9 | 5.4 | 4.7 | 4.0 | 4.6 | 4.1 | 3.5 | 4.0 | 3.7 | 3.1 | 3.6 | 3.5 | 2.9 | 3.3 | 3.3 | 2.8 |
| **400S300-54** | 345 | 305 | 11.4 | 9.1 | 7.9 | 7.2 | 6.3 | 5.3 | 6.3 | 5.5 | 4.6 | 5.7 | 5.0 | 4.2 | 5.3 | 4.6 | 3.9 | 5.0 | 4.4 | 3.7 |
| | 345 | 406 | 10.4 | 8.2 | 7.2 | 6.5 | 5.7 | 4.8 | 5.7 | 5.0 | 4.2 | 5.2 | 4.5 | 3.8 | 4.8 | 4.2 | 3.5 | 4.5 | 4.0 | 3.3 |
| | 345 | 610 | 9.1 | 7.2 | 6.3 | 5.7 | 5.0 | 4.2 | 5.0 | 4.4 | 3.7 | 4.5 | 4.0 | 3.3 | 4.2 | 3.7 | 3.1 | 4.0 | 3.5 | 2.9 |
| **400S300-68** | 345 | 305 | 12.4 | 9.9 | 8.6 | 7.8 | 6.8 | 5.8 | 6.8 | 6.0 | 5.0 | 6.2 | 5.4 | 4.6 | 5.8 | 5.0 | 4.2 | 5.4 | 4.7 | 4.0 |
| | 345 | 406 | 11.3 | 9.0 | 7.8 | 7.1 | 6.2 | 5.2 | 6.2 | 5.4 | 4.6 | 5.6 | 4.9 | 4.2 | 5.2 | 4.6 | 3.9 | 4.9 | 4.3 | 3.6 |
| | 345 | 610 | 9.9 | 7.8 | 6.8 | 6.2 | 5.4 | 4.6 | 5.4 | 4.7 | 4.0 | 4.9 | 4.3 | 3.6 | 4.6 | 4.0 | 3.4 | 4.3 | 3.8 | 3.2 |
| **400S300-97** | 345 | 305 | 14.0 | 11.1 | 9.7 | 8.8 | 7.7 | 6.5 | 7.7 | 6.7 | 5.7 | 7.0 | 6.1 | 5.1 | 6.5 | 5.7 | 4.8 | 6.1 | 5.3 | 4.5 |
| | 345 | 406 | 12.7 | 10.1 | 8.8 | 8.0 | 7.0 | 5.9 | 7.0 | 6.1 | 5.1 | 6.3 | 5.5 | 4.7 | 5.9 | 5.1 | 4.3 | 5.5 | 4.8 | 4.1 |
| | 345 | 610 | 11.1 | 8.8 | 7.7 | 7.0 | 6.1 | 5.1 | 6.1 | 5.3 | 4.5 | 5.5 | 4.8 | 4.1 | 5.1 | 4.5 | 3.8 | 4.8 | 4.2 | 3.6 |

**NOTES:**

1) $p = I_w \{qC_eC_gC_p\}$; $I_w$ of 0.75 has been incorpotated in the deflection values of the table.
The parameters in the bracket { } must be determined by the design professional in accordance with the NBCC.

2) "e" web stiffeners required at ends.

Bailey Metal Products, Dass Metal Products, DCM Metal Corp., EB Métal Inc., Imperial Building Products, Manugypse, Groupe UP, Trebor Building Products Ltd.

## SINGLE SPAN CURTAIN WALL LIMITING HEIGHTS (m)

| Stud Designation | Specified Loads $F_y$ (MPa) | Spacing (mm) | 0.25 kPa | | | 0.50 kPa | | | 0.75 kPa | | | 1.00 kPa | | | 1.25 kPa | | | 1.50 kPa | | |
|---|---|---|---|---|---|---|---|---|---|---|---|---|---|---|---|---|---|---|---|---|
| | | | L/120 | L/240 | L/360 | L/240 | L/360 | L/600 | L/240 | L/360 | L/600 | L/240 | L/360 | L/600 | L/240 | L/360 | L/600 | L/240 | L/360 | L/600 |
| **600S125-33** | 230 | 305 | 8.5 | 8.5 | 7.5 | 6.0 | 6.0 | 5.0 | 4.9 | 4.9 | 4.4 | 4.3 | 4.3 | 4.0 | 3.8 | 3.8 | 3.7 | 3.5 | 3.5 | 3.5 |
| | 230 | 406 | 7.4 | 7.4 | 6.8 | 5.2 | 5.2 | 4.6 | 4.3 | 4.3 | 4.0 | 3.7 | 3.7 | 3.6 | 3.3 | 3.3 | 3.3 | 3.0 | 3.0 | 3.0 |
| | 230 | 610 | 6.0 | 6.0 | 6.0 | 4.3 | 4.3 | 4.0 | 3.5 | 3.5 | 3.5 | 3.0 | 3.0 | 3.0 | 2.7e | 2.7e | 2.7e | 2.5e | 2.5e | 2.5e |
| **600S125-43** | 230 | 305 | 10.4 | 9.5 | 8.3 | 7.3 | 6.6 | 5.5 | 6.0 | 5.7 | 4.8 | 5.2 | 5.2 | 4.4 | 4.6 | 4.6 | 4.1 | 4.2 | 4.2 | 3.8 |
| | 230 | 406 | 9.0 | 8.6 | 7.5 | 6.4 | 6.0 | 5.0 | 5.2 | 5.2 | 4.4 | 4.5 | 4.5 | 4.0 | 4.0 | 4.0 | 3.7 | 3.7 | 3.7 | 3.5 |
| | 230 | 610 | 7.3 | 7.3 | 6.6 | 5.2 | 5.2 | 4.4 | 4.2 | 4.2 | 3.8 | 3.7 | 3.7 | 3.5 | 3.3 | 3.3 | 3.2 | 3.0 | 3.0 | 3.0 |
| **600S125-54** | 345 | 305 | 12.8 | 10.2 | 8.9 | 8.1 | 7.0 | 5.9 | 7.0 | 6.2 | 5.2 | 6.4 | 5.6 | 4.7 | 5.9 | 5.2 | 4.4 | 5.6 | 4.9 | 4.1 |
| | 345 | 406 | 11.6 | 9.2 | 8.1 | 7.3 | 6.4 | 5.4 | 6.4 | 5.6 | 4.7 | 5.8 | 5.1 | 4.3 | 5.4 | 4.7 | 4.0 | 4.9 | 4.4 | 3.7 |
| | 345 | 610 | 9.9 | 8.1 | 7.0 | 6.4 | 5.6 | 4.7 | 5.6 | 4.9 | 4.1 | 4.9 | 4.4 | 3.7 | 4.4 | 4.1 | 3.5 | 4.0 | 3.9 | 3.3 |
| **600S162-33** | 230 | 305 | 10.8 | 9.5 | 8.3 | 7.5 | 6.6 | 5.5 | 6.2 | 5.7 | 4.8 | 5.4 | 5.2 | 4.4 | 4.8 | 4.8 | 4.1 | 4.4 | 4.4 | 3.8 |
| | 230 | 406 | 9.3 | 8.6 | 7.5 | 6.6 | 6.0 | 5.0 | 5.4 | 5.2 | 4.4 | 4.7 | 4.7 | 4.0 | 4.2e | 4.2e | 3.7 | 3.8e | 3.8e | 3.5e |
| | 230 | 610 | 7.6 | 7.5 | 6.6 | 5.4 | 5.2 | 4.4 | 4.4 | 4.4 | 3.8 | 3.8e | 3.8e | 3.5e | 3.4e | 3.4e | 3.2e | 3.1e | 3.1e | 3.0e |
| **600S162-43** | 230 | 305 | 12.9 | 10.3 | 9.0 | 8.2 | 7.1 | 6.0 | 7.1 | 6.2 | 5.3 | 6.4 | 5.7 | 4.8 | 5.8 | 5.3 | 4.4 | 5.2 | 5.0 | 4.2 |
| | 230 | 406 | 11.1 | 9.4 | 8.2 | 7.4 | 6.5 | 5.5 | 6.4 | 5.7 | 4.8 | 5.6 | 5.2 | 4.3 | 5.0 | 4.8 | 4.0 | 4.5 | 4.5 | 3.8 |
| | 230 | 610 | 9.1 | 8.2 | 7.1 | 6.4 | 5.7 | 4.8 | 5.2 | 5.0 | 4.2 | 4.5 | 4.5 | 3.8 | 4.1 | 4.1 | 3.5 | 3.7 | 3.7 | 3.3 |
| **600S162-54** | 345 | 305 | 13.9 | 11.1 | 9.7 | 8.8 | 7.7 | 6.5 | 7.7 | 6.7 | 5.7 | 7.0 | 6.1 | 5.1 | 6.5 | 5.7 | 4.8 | 6.1 | 5.3 | 4.5 |
| | 345 | 406 | 12.7 | 10.0 | 8.8 | 8.0 | 7.0 | 5.9 | 7.0 | 6.1 | 5.1 | 6.3 | 5.5 | 4.7 | 5.9 | 5.1 | 4.3 | 5.5 | 4.8 | 4.1 |
| | 345 | 610 | 11.1 | 8.8 | 7.7 | 7.0 | 6.1 | 5.1 | 6.1 | 5.3 | 4.5 | 5.5 | 4.8 | 4.1 | 5.1 | 4.5 | 3.8 | 4.8 | 4.2 | 3.6 |
| **600S162-68** | 345 | 305 | 14.9 | 11.9 | 10.4 | 9.4 | 8.2 | 6.9 | 8.2 | 7.2 | 6.1 | 7.5 | 6.5 | 5.5 | 6.9 | 6.1 | 5.1 | 6.5 | 5.7 | 4.8 |
| | 345 | 406 | 13.6 | 10.8 | 9.4 | 8.6 | 7.5 | 6.3 | 7.5 | 6.5 | 5.5 | 6.8 | 5.9 | 5.0 | 6.3 | 5.5 | 4.6 | 5.9 | 5.2 | 4.4 |
| | 345 | 610 | 11.9 | 9.4 | 8.2 | 7.5 | 6.5 | 5.5 | 6.5 | 5.7 | 4.8 | 5.9 | 5.2 | 4.4 | 5.5 | 4.8 | 4.1 | 5.2 | 4.5 | 3.8 |
| **600S162-97** | 345 | 305 | 16.6 | 13.1 | 11.5 | 10.4 | 9.1 | 7.7 | 9.1 | 8.0 | 6.7 | 8.3 | 7.2 | 6.1 | 7.7 | 6.7 | 5.7 | 7.2 | 6.3 | 5.3 |
| | 345 | 406 | 15.0 | 11.9 | 10.4 | 9.5 | 8.3 | 7.0 | 8.3 | 7.2 | 6.1 | 7.5 | 6.6 | 5.5 | 7.0 | 6.1 | 5.1 | 6.6 | 5.7 | 4.8 |
| | 345 | 610 | 13.1 | 10.4 | 9.1 | 8.3 | 7.2 | 6.1 | 7.2 | 6.3 | 5.3 | 6.6 | 5.7 | 4.8 | 6.1 | 5.3 | 4.5 | 5.7 | 5.0 | 4.2 |
| **600S200-33** | 230 | 305 | 11.5 | 9.9 | 8.6 | 7.8 | 6.9 | 5.8 | 6.6 | 6.0 | 5.1 | 5.8 | 5.4 | 4.6 | 5.1 | 5.1 | 4.3 | 4.7e | 4.7e | 4.0 |
| | 230 | 406 | 10.0 | 9.0 | 7.8 | 7.1 | 6.2 | 5.3 | 5.8 | 5.4 | 4.6 | 5.0 | 4.9 | 4.2 | 4.5e | 4.5e | 3.9 | 4.1e | 4.1e | 3.6e |
| | 230 | 610 | 8.1 | 7.8 | 6.9 | 5.8 | 5.4 | 4.6 | 4.7e | 4.7e | 4.0 | 4.1e | 4.1e | 3.6e | 3.6e | 3.6e | 3.4e | 3.3e | 3.3e | 3.2e |
| **600S200-43** | 230 | 305 | 13.6 | 10.8 | 9.5 | 8.6 | 7.5 | 6.3 | 7.5 | 6.6 | 5.5 | 6.8 | 6.0 | 5.0 | 6.2 | 5.5 | 4.7 | 5.6 | 5.2 | 4.4 |
| | 230 | 406 | 11.9 | 9.8 | 8.6 | 7.8 | 6.8 | 5.8 | 6.8 | 6.0 | 5.0 | 6.0 | 5.4 | 4.6 | 5.3 | 5.0 | 4.2 | 4.9 | 4.7 | 4.0 |
| | 230 | 610 | 9.7 | 8.6 | 7.5 | 6.8 | 6.0 | 5.0 | 5.6 | 5.2 | 4.4 | 4.9 | 4.7 | 4.0 | 4.4 | 4.4 | 3.7 | 4.0e | 4.0e | 3.5 |
| **600S200-54** | 345 | 305 | 14.6 | 11.6 | 10.2 | 9.2 | 8.1 | 6.8 | 8.1 | 7.0 | 5.9 | 7.3 | 6.4 | 5.4 | 6.8 | 5.9 | 5.0 | 6.4 | 5.6 | 4.7 |
| | 345 | 406 | 13.3 | 10.6 | 9.2 | 8.4 | 7.3 | 6.2 | 7.3 | 6.4 | 5.4 | 6.7 | 5.8 | 4.9 | 6.2 | 5.4 | 4.6 | 5.8 | 5.1 | 4.3 |
| | 345 | 610 | 11.6 | 9.2 | 8.1 | 7.3 | 6.4 | 5.4 | 6.4 | 5.6 | 4.7 | 5.8 | 5.1 | 4.3 | 5.4 | 4.7 | 4.0 | 5.1 | 4.4 | 3.7 |
| **600S200-68** | 345 | 305 | 15.7 | 12.5 | 10.9 | 9.9 | 8.6 | 7.3 | 8.6 | 7.6 | 6.4 | 7.9 | 6.9 | 5.8 | 7.3 | 6.4 | 5.4 | 6.9 | 6.0 | 5.1 |
| | 345 | 406 | 14.3 | 11.3 | 9.9 | 9.0 | 7.9 | 6.6 | 7.9 | 6.9 | 5.8 | 7.1 | 6.2 | 5.3 | 6.6 | 5.8 | 4.9 | 6.2 | 5.4 | 4.6 |
| | 345 | 610 | 12.5 | 9.9 | 8.6 | 7.9 | 6.9 | 5.8 | 6.9 | 6.0 | 5.1 | 6.2 | 5.4 | 4.6 | 5.8 | 5.1 | 4.3 | 5.4 | 4.8 | 4.0 |
| **600S200-97** | 345 | 305 | 17.4 | 13.8 | 12.1 | 11.0 | 9.6 | 8.1 | 9.6 | 8.4 | 7.1 | 8.7 | 7.6 | 6.4 | 8.1 | 7.1 | 6.0 | 7.6 | 6.7 | 5.6 |
| | 345 | 406 | 15.9 | 12.6 | 11.0 | 10.0 | 8.7 | 7.4 | 8.7 | 7.6 | 6.4 | 7.9 | 6.9 | 5.8 | 7.4 | 6.4 | 5.4 | 6.9 | 6.0 | 5.1 |
| | 345 | 610 | 13.8 | 11.0 | 9.6 | 8.7 | 7.6 | 6.4 | 7.6 | 6.7 | 5.6 | 6.9 | 6.0 | 5.1 | 6.4 | 5.6 | 4.7 | 6.0 | 5.3 | 4.5 |
| **600S250-33** | 230 | 305 | 11.8 | 10.2 | 8.9 | 8.1 | 7.1 | 6.0 | 6.8 | 6.2 | 5.2 | 5.9 | 5.6 | 4.7 | 5.3 | 5.2 | 4.4 | 4.8e | 4.8e | 4.1 |
| | 230 | 406 | 10.2 | 9.3 | 8.1 | 7.2 | 6.4 | 5.4 | 5.9 | 5.6 | 4.7 | 5.1e | 5.1e | 4.3 | 4.6e | 4.6e | 4.0 | 4.2e | 4.2e | 3.8e |
| | 230 | 610 | 8.3 | 8.1 | 7.1 | 5.9 | 5.6 | 4.7 | 4.8e | 4.8e | 4.1 | 4.2e | 4.2e | 3.8e | 3.7e | 3.7e | 3.5e | 3.4e | 3.4e | 3.3e |
| **600S250-43** | 230 | 305 | 14.1 | 11.3 | 9.9 | 9.0 | 7.8 | 6.6 | 7.8 | 6.9 | 5.8 | 7.1 | 6.2 | 5.3 | 6.3 | 5.8 | 4.9 | 5.8 | 5.4 | 4.6 |
| | 230 | 406 | 12.2 | 10.3 | 9.0 | 8.2 | 7.1 | 6.0 | 7.1 | 6.2 | 5.3 | 6.1 | 5.7 | 4.8 | 5.5 | 5.3 | 4.4 | 5.0 | 4.9 | 4.2 |
| | 230 | 610 | 10.0 | 9.0 | 7.8 | 7.1 | 6.2 | 5.3 | 5.8 | 5.4 | 4.6 | 5.0 | 4.9 | 4.2 | 4.5 | 4.5 | 3.9 | 4.1e | 4.1e | 3.6 |
| **600S250-54** | 345 | 305 | 15.1 | 12.0 | 10.5 | 9.5 | 8.3 | 7.0 | 8.3 | 7.3 | 6.1 | 7.6 | 6.6 | 5.6 | 7.0 | 6.1 | 5.2 | 6.6 | 5.8 | 4.9 |
| | 345 | 406 | 13.7 | 10.9 | 9.5 | 8.7 | 7.6 | 6.4 | 7.6 | 6.6 | 5.6 | 6.9 | 6.0 | 5.1 | 6.4 | 5.6 | 4.7 | 6.0 | 5.2 | 4.4 |
| | 345 | 610 | 12.0 | 9.5 | 8.3 | 7.6 | 6.6 | 5.6 | 6.6 | 5.8 | 4.9 | 6.0 | 5.2 | 4.4 | 5.6 | 4.9 | 4.1 | 5.2 | 4.6 | 3.9 |
| **600S250-68** | 345 | 305 | 16.4 | 13.0 | 11.4 | 10.3 | 9.0 | 7.6 | 9.0 | 7.9 | 6.7 | 8.2 | 7.2 | 6.0 | 7.6 | 6.7 | 5.6 | 7.2 | 6.3 | 5.3 |
| | 345 | 406 | 14.9 | 11.8 | 10.3 | 9.4 | 8.2 | 6.9 | 8.2 | 7.2 | 6.0 | 7.5 | 6.5 | 5.5 | 6.9 | 6.0 | 5.1 | 6.5 | 5.7 | 4.8 |
| | 345 | 610 | 13.0 | 10.3 | 9.0 | 8.2 | 7.2 | 6.0 | 7.2 | 6.3 | 5.3 | 6.5 | 5.7 | 4.8 | 6.0 | 5.3 | 4.5 | 5.7 | 5.0 | 4.2 |
| **600S250-97** | 345 | 305 | 18.3 | 14.5 | 12.7 | 11.5 | 10.1 | 8.5 | 10.1 | 8.8 | 7.4 | 9.2 | 8.0 | 6.7 | 8.5 | 7.4 | 6.3 | 8.0 | 7.0 | 5.9 |
| | 345 | 406 | 16.6 | 13.2 | 11.5 | 10.5 | 9.2 | 7.7 | 9.2 | 8.0 | 6.7 | 8.3 | 7.3 | 6.1 | 7.7 | 6.7 | 5.7 | 7.3 | 6.4 | 5.4 |
| | 345 | 610 | 14.5 | 11.5 | 10.1 | 9.2 | 8.0 | 6.7 | 8.0 | 7.0 | 5.9 | 7.3 | 6.4 | 5.4 | 6.7 | 5.9 | 5.0 | 6.4 | 5.5 | 4.7 |
| **600S300-33** | 230 | 305 | 11.9 | 10.5 | 9.2 | 8.3 | 7.3 | 6.1 | 6.9 | 6.4 | 5.4 | 6.0 | 5.8 | 4.9 | 5.3 | 5.3 | 4.5 | 4.9e | 4.9e | 4.3 |
| | 230 | 406 | 10.3 | 9.5 | 8.3 | 7.3 | 6.6 | 5.6 | 6.0 | 5.8 | 4.9 | 5.2e | 5.2e | 4.4 | 4.6e | 4.6e | 4.1e | 4.2e | 4.2e | 3.9e |
| | 230 | 610 | 8.4 | 8.3 | 7.3 | 6.0 | 5.8 | 4.9 | 4.9e | 4.9e | 4.3 | 4.2e | 4.2e | 3.9e | 3.8e | 3.8e | 3.6e | 3.4e | 3.4e | 3.4e |
| **600S300-43** | 230 | 305 | 14.4 | 11.6 | 10.1 | 9.2 | 8.0 | 6.8 | 8.0 | 7.0 | 5.9 | 7.2 | 6.4 | 5.4 | 6.4 | 5.9 | 5.0 | 5.9 | 5.6 | 4.7 |
| | 230 | 406 | 12.4 | 10.5 | 9.2 | 8.4 | 7.3 | 6.2 | 7.2 | 6.4 | 5.4 | 6.2 | 5.8 | 4.9 | 5.6 | 5.4 | 4.5 | 5.1 | 5.1 | 4.3 |
| | 230 | 610 | 10.2 | 9.2 | 8.0 | 7.2 | 6.4 | 5.4 | 5.9 | 5.6 | 4.7 | 5.1 | 5.1 | 4.3 | 4.5 | 4.5 | 4.0 | 4.1e | 4.1e | 3.7 |
| **600S300-54** | 345 | 305 | 15.5 | 12.3 | 10.7 | 9.8 | 8.5 | 7.2 | 8.5 | 7.5 | 6.3 | 7.8 | 6.8 | 5.7 | 7.2 | 6.3 | 5.3 | 6.8 | 5.9 | 5.0 |
| | 345 | 406 | 14.1 | 11.2 | 9.8 | 8.9 | 7.8 | 6.5 | 7.8 | 6.8 | 5.7 | 7.0 | 6.2 | 5.2 | 6.5 | 5.7 | 4.8 | 6.2 | 5.4 | 4.5 |
| | 345 | 610 | 12.3 | 9.8 | 8.5 | 7.8 | 6.8 | 5.7 | 6.8 | 5.9 | 5.0 | 6.2 | 5.4 | 4.5 | 5.7 | 5.0 | 4.2 | 5.4 | 4.7 | 4.0 |
| **600S300-68** | 345 | 305 | 16.9 | 13.4 | 11.7 | 10.6 | 9.3 | 7.8 | 9.3 | 8.1 | 6.8 | 8.4 | 7.4 | 6.2 | 7.8 | 6.8 | 5.8 | 7.4 | 6.4 | 5.4 |
| | 345 | 406 | 15.3 | 12.2 | 10.6 | 9.6 | 8.4 | 7.1 | 8.4 | 7.4 | 6.2 | 7.7 | 6.7 | 5.6 | 7.1 | 6.2 | 5.2 | 6.7 | 5.8 | 4.9 |
| | 345 | 610 | 13.4 | 10.6 | 9.3 | 8.4 | 7.4 | 6.2 | 7.4 | 6.4 | 5.4 | 6.7 | 5.8 | 4.9 | 6.2 | 5.4 | 4.6 | 5.8 | 5.1 | 4.3 |
| **600S300-97** | 345 | 305 | 19.0 | 15.1 | 13.2 | 12.0 | 10.5 | 8.8 | 10.5 | 9.1 | 7.7 | 9.5 | 8.3 | 7.0 | 8.8 | 7.7 | 6.5 | 8.3 | 7.3 | 6.1 |
| | 345 | 406 | 17.3 | 13.7 | 12.0 | 10.9 | 9.5 | 8.0 | 9.5 | 8.3 | 7.0 | 8.6 | 7.5 | 6.4 | 8.0 | 7.0 | 5.9 | 7.5 | 6.6 | 5.6 |
| | 345 | 610 | 15.1 | 12.0 | 10.5 | 9.5 | 8.3 | 7.0 | 8.3 | 7.3 | 6.1 | 7.5 | 6.6 | 5.6 | 7.0 | 6.1 | 5.2 | 6.6 | 5.8 | 4.9 |

**NOTES:**

1) $p = I_w \{qC_eC_gC_p\}$; $I_w$ of 0.75 has been incorpotated in the deflection values of the table.
The parameters in the bracket { } must be determined by the design professional in accordance with the NBCC.

2) "e" web stiffeners required at ends.

Bailey Metal Products, Dass Metal Products, DCM Metal Corp., EB Métal Inc., Imperial Building Products, Manugypse, Groupe UP, Trebor Building Products Ltd.

## SINGLE SPAN CURTAIN WALL LIMITING HEIGHTS (m)

| Stud Designation | Specified Loads $F_y$ (MPa) | Spacing (mm) | 0.25 kPa | | | 0.50 kPa | | | 0.75 kPa | | | 1.00 kPa | | | 1.25 kPa | | | 1.50 kPa | | |
|---|---|---|---|---|---|---|---|---|---|---|---|---|---|---|---|---|---|---|---|---|
| | | | L/120 | L/240 | L/360 | L/240 | L/360 | L/600 | L/240 | L/360 | L/600 | L/240 | L/360 | L/600 | L/240 | L/360 | L/600 | L/240 | L/360 | L/600 |
| **800S162-43** | 230 | 305 | 15.0 | 12.8 | 11.2 | 10.2 | 8.9 | 7.5 | 8.6 | 7.8 | 6.6 | 7.5e | 7.1 | 6.0 | 6.7e | 6.6e | 5.5 | 6.1e | 6.1e | 5.2e |
| | 230 | 406 | 13.0 | 11.7 | 10.2 | 9.2 | 8.1 | 6.8 | 7.5e | 7.1 | 6.0 | 6.5e | 6.4e | 5.4 | 5.8e | 5.8e | 5.0e | 5.3e | 5.3e | 4.7e |
| | 230 | 610 | 10.6 | 10.2 | 8.9 | 7.5e | 7.1 | 6.0 | 6.1e | 6.1e | 5.2e | 5.3e | 5.3e | 4.7e | 4.7e | 4.7e | 4.4e | 4.3e | 4.3e | 4.1e |
| **800S162-54** | 345 | 305 | 17.4 | 13.8 | 12.1 | 11.0 | 9.6 | 8.1 | 9.6 | 8.4 | 7.1 | 8.7 | 7.6 | 6.4 | 8.1 | 7.1 | 6.0 | 7.6 | 6.6 | 5.6 |
| | 345 | 406 | 15.8 | 12.5 | 11.0 | 10.0 | 8.7 | 7.3 | 8.7 | 7.6 | 6.4 | 7.9 | 6.9 | 5.8 | 7.3 | 6.4 | 5.4 | 6.9 | 6.0 | 5.1 |
| | 345 | 610 | 13.8 | 11.0 | 9.6 | 8.7 | 7.6 | 6.4 | 7.6 | 6.6 | 5.6 | 6.9 | 6.0 | 5.1 | 6.3 | 5.6 | 4.7 | 5.8e | 5.3 | 4.4 |
| **800S162-68** | 345 | 305 | 18.8 | 14.9 | 13.1 | 11.9 | 10.4 | 8.7 | 10.4 | 9.1 | 7.6 | 9.4 | 8.2 | 6.9 | 8.7 | 7.6 | 6.4 | 8.2 | 7.2 | 6.1 |
| | 345 | 406 | 17.1 | 13.6 | 11.9 | 10.8 | 9.4 | 7.9 | 9.4 | 8.2 | 6.9 | 8.6 | 7.5 | 6.3 | 7.9 | 6.9 | 5.8 | 7.5 | 6.5 | 5.5 |
| | 345 | 610 | 14.9 | 11.9 | 10.4 | 9.4 | 8.2 | 6.9 | 8.2 | 7.2 | 6.1 | 7.5 | 6.5 | 5.5 | 6.9 | 6.1 | 5.1 | 6.5 | 5.7 | 4.8 |
| **800S162-97** | 345 | 305 | 20.9 | 16.6 | 14.5 | 13.2 | 11.5 | 9.7 | 11.5 | 10.1 | 8.5 | 10.5 | 9.1 | 7.7 | 9.7 | 8.5 | 7.2 | 9.1 | 8.0 | 6.7 |
| | 345 | 406 | 19.0 | 15.1 | 13.2 | 12.0 | 10.5 | 8.8 | 10.5 | 9.1 | 7.7 | 9.5 | 8.3 | 7.0 | 8.8 | 7.7 | 6.5 | 8.3 | 7.3 | 6.1 |
| | 345 | 610 | 16.6 | 13.2 | 11.5 | 10.5 | 9.1 | 7.7 | 9.1 | 8.0 | 6.7 | 8.3 | 7.3 | 6.1 | 7.7 | 6.7 | 5.7 | 7.3 | 6.3 | 5.4 |
| **800S200-43** | 230 | 305 | 16.1 | 13.6 | 11.9 | 10.8 | 9.4 | 7.9 | 9.3 | 8.2 | 6.9 | 8.0e | 7.5e | 6.3 | 7.2e | 6.9e | 5.9e | 6.6e | 6.5e | 5.5e |
| | 230 | 406 | 13.9 | 12.3 | 10.8 | 9.8 | 8.6 | 7.2 | 8.0e | 7.5e | 6.3 | 7.0e | 6.8e | 5.7e | 6.2e | 6.2e | 5.3e | 5.7e | 5.7e | 5.0e |
| | 230 | 610 | 11.4 | 10.8 | 9.4 | 8.0e | 7.5e | 6.3 | 6.6e | 6.5e | 5.5e | 5.7e | 5.7e | 5.0e | 5.1e | 5.1e | 4.6e | 4.6e | 4.6e | 4.4e |
| **800S200-54** | 345 | 305 | 18.4 | 14.6 | 12.8 | 11.6 | 10.1 | 8.5 | 10.1 | 8.8 | 7.5 | 9.2 | 8.0 | 6.8 | 8.5 | 7.5 | 6.3 | 8.0 | 7.0 | 5.9 |
| | 345 | 406 | 16.7 | 13.3 | 11.6 | 10.5 | 9.2 | 7.8 | 9.2 | 8.0 | 6.8 | 8.4 | 7.3 | 6.2 | 7.8 | 6.8 | 5.7 | 7.3 | 6.4 | 5.4 |
| | 345 | 610 | 14.6 | 11.6 | 10.1 | 9.2 | 8.0 | 6.8 | 8.0 | 7.0 | 5.9 | 7.3 | 6.4 | 5.4 | 6.8e | 5.9 | 5.0 | 6.2e | 5.6 | 4.7 |
| **800S200-68** | 345 | 305 | 19.7 | 15.7 | 13.7 | 12.4 | 10.9 | 9.2 | 10.9 | 9.5 | 8.0 | 9.9 | 8.6 | 7.3 | 9.2 | 8.0 | 6.8 | 8.6 | 7.5 | 6.4 |
| | 345 | 406 | 17.9 | 14.2 | 12.4 | 11.3 | 9.9 | 8.3 | 9.9 | 8.6 | 7.3 | 9.0 | 7.8 | 6.6 | 8.3 | 7.3 | 6.1 | 7.8 | 6.8 | 5.8 |
| | 345 | 610 | 15.7 | 12.4 | 10.9 | 9.9 | 8.6 | 7.3 | 8.6 | 7.5 | 6.4 | 7.8 | 6.8 | 5.8 | 7.3 | 6.4 | 5.4 | 6.8 | 6.0 | 5.0 |
| **800S200-97** | 345 | 305 | 22.0 | 17.4 | 15.2 | 13.8 | 12.1 | 10.2 | 12.1 | 10.6 | 8.9 | 11.0 | 9.6 | 8.1 | 10.2 | 8.9 | 7.5 | 9.6 | 8.4 | 7.1 |
| | 345 | 406 | 20.0 | 15.8 | 13.8 | 12.6 | 11.0 | 9.3 | 11.0 | 9.6 | 8.1 | 10.0 | 8.7 | 7.4 | 9.3 | 8.1 | 6.8 | 8.7 | 7.6 | 6.4 |
| | 345 | 610 | 17.4 | 13.8 | 12.1 | 11.0 | 9.6 | 8.1 | 9.6 | 8.4 | 7.1 | 8.7 | 7.6 | 6.4 | 8.1 | 7.1 | 6.0 | 7.6 | 6.7 | 5.6 |
| **800S250-43** | 230 | 305 | 16.5 | 14.1 | 12.4 | 11.2 | 9.8 | 8.3 | 9.5e | 8.6 | 7.2 | 8.2e | 7.8e | 6.6 | 7.4e | 7.2e | 6.1e | 6.7e | 6.7e | 5.7e |
| | 230 | 406 | 14.3 | 12.8 | 11.2 | 10.1 | 8.9 | 7.5 | 8.2e | 7.8e | 6.6 | 7.1e | 7.1e | 6.0e | 6.4e | 6.4e | 5.5e | 5.8e | 5.8e | 5.2e |
| | 230 | 610 | 11.7 | 11.2 | 9.8 | 8.2e | 7.8e | 6.6 | 6.7e | 6.7e | 5.7e | 5.8e | 5.8e | 5.2e | 5.2e | 5.2e | 4.8e | 4.8e | 4.8e | 4.6e |
| **800S250-54** | 345 | 305 | 18.9 | 15.0 | 13.1 | 11.9 | 10.4 | 8.8 | 10.4 | 9.1 | 7.7 | 9.5 | 8.3 | 7.0 | 8.8 | 7.7 | 6.5 | 8.3 | 7.2 | 6.1 |
| | 345 | 406 | 17.2 | 13.7 | 11.9 | 10.8 | 9.5 | 8.0 | 9.5 | 8.3 | 7.0 | 8.6 | 7.5 | 6.3 | 8.0 | 7.0 | 5.9 | 7.5 | 6.6 | 5.5 |
| | 345 | 610 | 15.0 | 11.9 | 10.4 | 9.5 | 8.3 | 7.0 | 8.3 | 7.2 | 6.1 | 7.5 | 6.6 | 5.5 | 6.9e | 6.1 | 5.1 | 6.3e | 5.7e | 4.8 |
| **800S250-68** | 345 | 305 | 20.5 | 16.3 | 14.2 | 12.9 | 11.3 | 9.5 | 11.3 | 9.9 | 8.3 | 10.3 | 9.0 | 7.6 | 9.5 | 8.3 | 7.0 | 9.0 | 7.8 | 6.6 |
| | 345 | 406 | 18.6 | 14.8 | 12.9 | 11.7 | 10.3 | 8.7 | 10.3 | 9.0 | 7.6 | 9.3 | 8.1 | 6.9 | 8.7 | 7.6 | 6.4 | 8.1 | 7.1 | 6.0 |
| | 345 | 610 | 16.3 | 12.9 | 11.3 | 10.3 | 9.0 | 7.6 | 9.0 | 7.8 | 6.6 | 8.1 | 7.1 | 6.0 | 7.6 | 6.6 | 5.6 | 7.1 | 6.2 | 5.2 |
| **800S250-97** | 345 | 305 | 23.0 | 18.2 | 15.9 | 14.5 | 12.6 | 10.7 | 12.6 | 11.0 | 9.3 | 11.5 | 10.0 | 8.5 | 10.7 | 9.3 | 7.9 | 10.0 | 8.8 | 7.4 |
| | 345 | 406 | 20.9 | 16.6 | 14.5 | 13.1 | 11.5 | 9.7 | 11.5 | 10.0 | 8.5 | 10.4 | 9.1 | 7.7 | 9.7 | 8.5 | 7.1 | 9.1 | 8.0 | 6.7 |
| | 345 | 610 | 18.2 | 14.5 | 12.6 | 11.5 | 10.0 | 8.5 | 10.0 | 8.8 | 7.4 | 9.1 | 8.0 | 6.7 | 8.5 | 7.4 | 6.2 | 8.0 | 7.0 | 5.9 |
| **800S300-43** | 230 | 305 | 16.7 | 14.5 | 12.6 | 11.5 | 10.0 | 8.5 | 9.7e | 8.8 | 7.4 | 8.4e | 8.0e | 6.7 | 7.5e | 7.4e | 6.2e | 6.8e | 6.8e | 5.9e |
| | 230 | 406 | 14.5 | 13.1 | 11.5 | 10.2e | 9.1 | 7.7 | 8.4e | 8.0e | 6.7 | 7.2e | 7.2e | 6.1e | 6.5e | 6.5e | 5.7e | 5.9e | 5.9e | 5.3e |
| | 230 | 610 | 11.8 | 11.5 | 10.0 | 8.4e | 8.0e | 6.7 | 6.8e | 6.8e | 5.9e | 5.9e | 5.9e | 5.3e | 5.3e | 5.3e | 4.9e | 4.8e | 4.8e | 4.7e |
| **800S300-54** | 345 | 305 | 19.4 | 15.4 | 13.4 | 12.2 | 10.7 | 9.0 | 10.7 | 9.3 | 7.8 | 9.7 | 8.5 | 7.1 | 9.0 | 7.8 | 6.6 | 8.5 | 7.4 | 6.2 |
| | 345 | 406 | 17.6 | 14.0 | 12.2 | 11.1 | 9.7 | 8.2 | 9.7 | 8.5 | 7.1 | 8.8 | 7.7 | 6.5 | 8.2 | 7.1 | 6.0 | 7.7 | 6.7 | 5.7 |
| | 345 | 610 | 15.4 | 12.2 | 10.7 | 9.7 | 8.5 | 7.1 | 8.5 | 7.4 | 6.2 | 7.7 | 6.7 | 5.7 | 7.0e | 6.2 | 5.3 | 6.4e | 5.9e | 4.9 |
| **800S300-68** | 345 | 305 | 21.0 | 16.7 | 14.6 | 13.3 | 11.6 | 9.8 | 11.6 | 10.1 | 8.5 | 10.5 | 9.2 | 7.8 | 9.8 | 8.5 | 7.2 | 9.2 | 8.0 | 6.8 |
| | 345 | 406 | 19.1 | 15.2 | 13.3 | 12.0 | 10.5 | 8.9 | 10.5 | 9.2 | 7.8 | 9.6 | 8.3 | 7.0 | 8.9 | 7.8 | 6.5 | 8.3 | 7.3 | 6.2 |
| | 345 | 610 | 16.7 | 13.3 | 11.6 | 10.5 | 9.2 | 7.8 | 9.2 | 8.0 | 6.8 | 8.3 | 7.3 | 6.2 | 7.8 | 6.8 | 5.7 | 7.3 | 6.4 | 5.4 |
| **800S300-97** | 345 | 305 | 23.7 | 18.8 | 16.5 | 14.9 | 13.1 | 11.0 | 13.1 | 11.4 | 9.6 | 11.9 | 10.4 | 8.7 | 11.0 | 9.6 | 8.1 | 10.4 | 9.1 | 7.6 |
| | 345 | 406 | 21.6 | 17.1 | 14.9 | 13.6 | 11.9 | 10.0 | 11.9 | 10.4 | 8.7 | 10.8 | 9.4 | 7.9 | 10.0 | 8.7 | 7.4 | 9.4 | 8.2 | 6.9 |
| | 345 | 610 | 18.8 | 14.9 | 13.1 | 11.9 | 10.4 | 8.7 | 10.4 | 9.1 | 7.6 | 9.4 | 8.2 | 6.9 | 8.7 | 7.6 | 6.4 | 8.2 | 7.2 | 6.1 |

**NOTES:**

1) $p = I_w \{qC_eC_gC_p\}$; $I_w$ of 0.75 has been incorpotated in the deflection values of the table.
The parameters in the bracket { } must be determined by the design professional in accordance with the NBCC.

2) "e" web stiffeners required at ends.

Bailey Metal Products, Dass Metal Products, DCM Metal Corp., EB Métal Inc., Imperial Building Products, Manugypse, Groupe UP, Trebor Building Products Ltd.

## SINGLE SPAN CURTAIN WALL LIMITING HEIGHTS (m)

| Stud Designation | Specified Loads $F_y$ (MPa) | Spacing (mm) | 1.75 kPa | | | 2.00 kPa | | | 2.25 kPa | | | 2.50 kPa | | | 2.75 kPa | | | 3.00 kPa | | |
|---|---|---|---|---|---|---|---|---|---|---|---|---|---|---|---|---|---|---|---|---|
| | | | L/240 | L/360 | L/600 | L/240 | L/360 | L/600 | L/240 | L/360 | L/600 | L/240 | L/360 | L/600 | L/240 | L/360 | L/600 | L/240 | L/360 | L/600 |
| **362S125-33** | 230 | 305 | 2.4 | 2.4 | 2.2 | 2.3 | 2.3 | 2.1 | 2.1 | 2.1 | 2.1 | 2.0 | 2.0 | 2.0 | 1.9 | 1.9 | 1.9 | 1.9 | 1.9 | 1.9 |
| | 230 | 406 | 2.1 | 2.1 | 2.0 | 2.0 | 2.0 | 1.9 | 1.9 | 1.9 | 1.9 | 1.8 | 1.8 | 1.8 | 1.7 | 1.7 | 1.7 | 1.6 | 1.6 | 1.6 |
| | 230 | 610 | 1.7 | 1.7 | 1.7 | 1.6 | 1.6 | 1.6 | 1.5 | 1.5 | 1.5 | 1.4 | 1.4 | 1.4 | 1.4e | 1.4e | 1.4e | 1.3e | 1.3e | 1.3e |
| **362S125-43** | 230 | 305 | 2.9 | 2.9 | 2.4 | 2.7 | 2.7 | 2.3 | 2.6 | 2.6 | 2.2 | 2.4 | 2.4 | 2.2 | 2.3 | 2.3 | 2.1 | 2.2 | 2.2 | 2.0 |
| | 230 | 406 | 2.5 | 2.5 | 2.2 | 2.4 | 2.4 | 2.1 | 2.2 | 2.2 | 2.0 | 2.1 | 2.1 | 2.0 | 2.0 | 2.0 | 1.9 | 1.9 | 1.9 | 1.8 |
| | 230 | 610 | 2.1 | 2.1 | 1.9 | 1.9 | 1.9 | 1.8 | 1.8 | 1.8 | 1.8 | 1.7 | 1.7 | 1.7 | 1.6 | 1.6 | 1.6 | 1.6 | 1.6 | 1.6 |
| **362S125-54** | 345 | 305 | 3.5 | 3.1 | 2.6 | 3.4 | 3.0 | 2.5 | 3.3 | 2.8 | 2.4 | 3.1 | 2.7 | 2.3 | 3.0 | 2.7 | 2.2 | 3.0 | 2.6 | 2.2 |
| | 345 | 406 | 3.2 | 2.8 | 2.4 | 3.1 | 2.7 | 2.3 | 3.0 | 2.6 | 2.2 | 2.8 | 2.5 | 2.1 | 2.7 | 2.4 | 2.0 | 2.6 | 2.3 | 2.0 |
| | 345 | 610 | 2.7 | 2.5 | 2.1 | 2.6 | 2.3 | 2.0 | 2.4 | 2.3 | 1.9 | 2.3 | 2.2 | 1.8 | 2.2 | 2.1 | 1.8 | 2.1 | 2.0 | 1.7 |
| **362S162-33** | 230 | 305 | 3.1 | 2.9 | 2.5 | 2.9 | 2.8 | 2.4 | 2.7 | 2.7 | 2.3 | 2.6 | 2.6 | 2.2 | 2.4 | 2.4 | 2.1 | 2.3 | 2.3 | 2.1 |
| | 230 | 406 | 2.7 | 2.7 | 2.2 | 2.5 | 2.5 | 2.1 | 2.3 | 2.3 | 2.1 | 2.2e | 2.2e | 2.0 | 2.1e | 2.1e | 1.9 | 2.0e | 2.0e | 1.9e |
| | 230 | 610 | 2.2e | 2.2e | 2.0 | 2.0e | 2.0e | 1.9e | 1.9e | 1.9e | 1.8e | 1.8e | 1.8e | 1.7e | 1.7e | 1.7e | 1.7e | 1.7e | 1.7e | 1.6e |
| **362S162-43** | 230 | 305 | 3.6 | 3.2 | 2.7 | 3.4 | 3.0 | 2.6 | 3.2 | 2.9 | 2.5 | 3.0 | 2.8 | 2.4 | 2.9 | 2.7 | 2.3 | 2.8 | 2.7 | 2.2 |
| | 230 | 406 | 3.1 | 2.9 | 2.4 | 2.9 | 2.8 | 2.3 | 2.8 | 2.7 | 2.2 | 2.6 | 2.6 | 2.2 | 2.5 | 2.5 | 2.1 | 2.4 | 2.4 | 2.0 |
| | 230 | 610 | 2.6 | 2.5 | 2.1 | 2.4 | 2.4 | 2.0 | 2.3 | 2.3 | 2.0 | 2.2 | 2.2 | 1.9 | 2.1 | 2.1 | 1.8 | 2.0 | 2.0 | 1.8 |
| **362S162-54** | 345 | 305 | 3.9 | 3.4 | 2.9 | 3.7 | 3.3 | 2.7 | 3.6 | 3.1 | 2.6 | 3.5 | 3.0 | 2.5 | 3.3 | 2.9 | 2.5 | 3.3 | 2.8 | 2.4 |
| | 345 | 406 | 3.5 | 3.1 | 2.6 | 3.4 | 3.0 | 2.5 | 3.3 | 2.8 | 2.4 | 3.1 | 2.7 | 2.3 | 3.0 | 2.7 | 2.2 | 3.0 | 2.6 | 2.2 |
| | 345 | 610 | 3.1 | 2.7 | 2.3 | 3.0 | 2.6 | 2.2 | 2.8 | 2.5 | 2.1 | 2.7 | 2.4 | 2.0 | 2.7 | 2.3 | 2.0 | 2.6 | 2.3 | 1.9 |
| **362S162-68** | 345 | 305 | 4.2 | 3.6 | 3.1 | 4.0 | 3.5 | 2.9 | 3.8 | 3.3 | 2.8 | 3.7 | 3.2 | 2.7 | 3.6 | 3.1 | 2.6 | 3.5 | 3.0 | 2.6 |
| | 345 | 406 | 3.8 | 3.3 | 2.8 | 3.6 | 3.2 | 2.7 | 3.5 | 3.0 | 2.6 | 3.4 | 2.9 | 2.5 | 3.3 | 2.8 | 2.4 | 3.2 | 2.8 | 2.3 |
| | 345 | 610 | 3.3 | 2.9 | 2.4 | 3.2 | 2.8 | 2.3 | 3.0 | 2.7 | 2.2 | 2.9 | 2.6 | 2.2 | 2.8 | 2.5 | 2.1 | 2.8 | 2.4 | 2.0 |
| **362S162-97** | 345 | 305 | 4.6 | 4.0 | 3.4 | 4.4 | 3.8 | 3.2 | 4.2 | 3.7 | 3.1 | 4.1 | 3.6 | 3.0 | 4.0 | 3.5 | 2.9 | 3.8 | 3.4 | 2.8 |
| | 345 | 406 | 4.2 | 3.6 | 3.1 | 4.0 | 3.5 | 2.9 | 3.8 | 3.4 | 2.8 | 3.7 | 3.2 | 2.7 | 3.6 | 3.1 | 2.6 | 3.5 | 3.0 | 2.6 |
| | 345 | 610 | 3.6 | 3.2 | 2.7 | 3.5 | 3.0 | 2.6 | 3.4 | 2.9 | 2.5 | 3.2 | 2.8 | 2.4 | 3.1 | 2.7 | 2.3 | 3.0 | 2.7 | 2.2 |
| **362S200-33** | 230 | 305 | 3.3 | 3.1 | 2.6 | 3.0 | 2.9 | 2.5 | 2.9 | 2.8 | 2.4 | 2.7 | 2.7 | 2.3 | 2.6 | 2.6 | 2.2 | 2.5e | 2.5e | 2.2 |
| | 230 | 406 | 2.8 | 2.8 | 2.3 | 2.6 | 2.6 | 2.2 | 2.5e | 2.5e | 2.2 | 2.4e | 2.4e | 2.1 | 2.2e | 2.2e | 2.0e | 2.2e | 2.2e | 2.0e |
| | 230 | 610 | 2.3e | 2.3e | 2.0 | 2.2e | 2.2e | 2.0e | 2.0e | 2.0e | 1.9e | 1.9e | 1.9e | 1.8e | 1.8e | 1.8e | 1.8e | 1.8e | 1.8e | 1.7e |
| **362S200-43** | 230 | 305 | 3.8 | 3.4 | 2.8 | 3.7 | 3.2 | 2.7 | 3.4 | 3.1 | 2.6 | 3.3 | 3.0 | 2.5 | 3.1 | 2.9 | 2.4 | 3.0 | 2.8 | 2.4 |
| | 230 | 406 | 3.4 | 3.0 | 2.6 | 3.2 | 2.9 | 2.5 | 3.0 | 2.8 | 2.4 | 2.8 | 2.7 | 2.3 | 2.7 | 2.6 | 2.2 | 2.6 | 2.5 | 2.1 |
| | 230 | 610 | 2.8 | 2.7 | 2.2 | 2.6 | 2.5 | 2.1 | 2.4 | 2.4 | 2.1 | 2.3 | 2.3 | 2.0 | 2.2e | 2.2e | 1.9 | 2.1e | 2.1e | 1.9 |
| **362S200-54** | 345 | 305 | 4.1 | 3.6 | 3.0 | 3.9 | 3.4 | 2.9 | 3.8 | 3.3 | 2.8 | 3.7 | 3.2 | 2.7 | 3.5 | 3.1 | 2.6 | 3.4 | 3.0 | 2.5 |
| | 345 | 406 | 3.7 | 3.3 | 2.8 | 3.6 | 3.1 | 2.6 | 3.4 | 3.0 | 2.5 | 3.3 | 2.9 | 2.4 | 3.2 | 2.8 | 2.4 | 3.1 | 2.7 | 2.3 |
| | 345 | 610 | 3.3 | 2.9 | 2.4 | 3.1 | 2.7 | 2.3 | 3.0 | 2.6 | 2.2 | 2.9 | 2.5 | 2.1 | 2.8 | 2.5 | 2.1 | 2.7 | 2.4 | 2.0 |
| **362S200-68** | 345 | 305 | 4.4 | 3.8 | 3.2 | 4.2 | 3.7 | 3.1 | 4.1 | 3.5 | 3.0 | 3.9 | 3.4 | 2.9 | 3.8 | 3.3 | 2.8 | 3.7 | 3.2 | 2.7 |
| | 345 | 406 | 4.0 | 3.5 | 2.9 | 3.8 | 3.3 | 2.8 | 3.7 | 3.2 | 2.7 | 3.6 | 3.1 | 2.6 | 3.4 | 3.0 | 2.5 | 3.3 | 2.9 | 2.5 |
| | 345 | 610 | 3.5 | 3.1 | 2.6 | 3.3 | 2.9 | 2.5 | 3.2 | 2.8 | 2.4 | 3.1 | 2.7 | 2.3 | 3.0 | 2.6 | 2.2 | 2.9 | 2.6 | 2.2 |
| **362S200-97** | 345 | 305 | 4.9 | 4.3 | 3.6 | 4.7 | 4.1 | 3.4 | 4.5 | 3.9 | 3.3 | 4.3 | 3.8 | 3.2 | 4.2 | 3.7 | 3.1 | 4.1 | 3.6 | 3.0 |
| | 345 | 406 | 4.4 | 3.9 | 3.3 | 4.2 | 3.7 | 3.1 | 4.1 | 3.6 | 3.0 | 3.9 | 3.4 | 2.9 | 3.8 | 3.3 | 2.8 | 3.7 | 3.2 | 2.7 |
| | 345 | 610 | 3.9 | 3.4 | 2.8 | 3.7 | 3.2 | 2.7 | 3.6 | 3.1 | 2.6 | 3.4 | 3.0 | 2.5 | 3.3 | 2.9 | 2.5 | 3.2 | 2.8 | 2.4 |
| **362S250-33** | 230 | 305 | 3.4 | 3.2 | 2.7 | 3.1 | 3.0 | 2.6 | 3.0 | 2.9 | 2.5 | 2.8 | 2.8 | 2.4 | 2.7e | 2.7e | 2.3 | 2.6e | 2.6e | 2.2 |
| | 230 | 406 | 2.9 | 2.9 | 2.4 | 2.7e | 2.7e | 2.3 | 2.6e | 2.6e | 2.2 | 2.4e | 2.4e | 2.2 | 2.3e | 2.3e | 2.1e | 2.2e | 2.2e | 2.0e |
| | 230 | 610 | 2.4e | 2.4e | 2.1e | 2.2e | 2.2e | 2.0e | 2.1e | 2.1e | 2.0e | 2.0e | 2.0e | 1.9e | 1.9e | 1.9e | 1.8e | 1.8e | 1.8e | 1.8e |
| **362S250-43** | 230 | 305 | 4.0 | 3.5 | 3.0 | 3.8 | 3.4 | 2.8 | 3.5 | 3.2 | 2.7 | 3.4 | 3.1 | 2.6 | 3.2 | 3.0 | 2.6 | 3.1 | 2.9 | 2.5 |
| | 230 | 406 | 3.5 | 3.2 | 2.7 | 3.3 | 3.1 | 2.6 | 3.1 | 2.9 | 2.5 | 2.9 | 2.8 | 2.4 | 2.8 | 2.8 | 2.3 | 2.7 | 2.7 | 2.3 |
| | 230 | 610 | 2.8 | 2.8 | 2.4 | 2.7 | 2.7 | 2.3 | 2.5 | 2.5 | 2.2 | 2.4 | 2.4 | 2.1 | 2.3e | 2.3e | 2.0 | 2.2e | 2.2e | 2.0 |
| **362S250-54** | 345 | 305 | 4.3 | 3.7 | 3.2 | 4.1 | 3.6 | 3.0 | 3.9 | 3.4 | 2.9 | 3.8 | 3.3 | 2.8 | 3.7 | 3.2 | 2.7 | 3.6 | 3.1 | 2.6 |
| | 345 | 406 | 3.9 | 3.4 | 2.9 | 3.7 | 3.2 | 2.7 | 3.6 | 3.1 | 2.6 | 3.5 | 3.0 | 2.5 | 3.3 | 2.9 | 2.5 | 3.2 | 2.8 | 2.4 |
| | 345 | 610 | 3.4 | 3.0 | 2.5 | 3.2 | 2.8 | 2.4 | 3.1 | 2.7 | 2.3 | 3.0 | 2.6 | 2.2 | 2.9 | 2.6 | 2.2 | 2.8 | 2.5 | 2.1 |
| **362S250-68** | 345 | 305 | 4.6 | 4.1 | 3.4 | 4.4 | 3.9 | 3.3 | 4.3 | 3.7 | 3.1 | 4.1 | 3.6 | 3.0 | 4.0 | 3.5 | 2.9 | 3.9 | 3.4 | 2.9 |
| | 345 | 406 | 4.2 | 3.7 | 3.1 | 4.0 | 3.5 | 3.0 | 3.9 | 3.4 | 2.9 | 3.7 | 3.3 | 2.8 | 3.6 | 3.2 | 2.7 | 3.5 | 3.1 | 2.6 |
| | 345 | 610 | 3.7 | 3.2 | 2.7 | 3.5 | 3.1 | 2.6 | 3.4 | 3.0 | 2.5 | 3.3 | 2.9 | 2.4 | 3.2 | 2.8 | 2.3 | 3.1 | 2.7 | 2.3 |
| **362S250-97** | 345 | 305 | 5.2 | 4.5 | 3.8 | 4.9 | 4.3 | 3.6 | 4.7 | 4.1 | 3.5 | 4.6 | 4.0 | 3.4 | 4.4 | 3.9 | 3.3 | 4.3 | 3.8 | 3.2 |
| | 345 | 406 | 4.7 | 4.1 | 3.5 | 4.5 | 3.9 | 3.3 | 4.3 | 3.8 | 3.2 | 4.2 | 3.6 | 3.1 | 4.0 | 3.5 | 3.0 | 3.9 | 3.4 | 2.9 |
| | 345 | 610 | 4.1 | 3.6 | 3.0 | 3.9 | 3.4 | 2.9 | 3.8 | 3.3 | 2.8 | 3.6 | 3.2 | 2.7 | 3.5 | 3.1 | 2.6 | 3.4 | 3.0 | 2.5 |
| **362S300-33** | 230 | 305 | 3.4 | 3.3 | 2.8 | 3.2 | 3.1 | 2.6 | 3.0 | 3.0 | 2.5 | 2.9 | 2.9 | 2.5 | 2.7e | 2.7e | 2.4 | 2.6e | 2.6e | 2.3 |
| | 230 | 406 | 3.0 | 3.0 | 2.5 | 2.8e | 2.8e | 2.4 | 2.6e | 2.6e | 2.3 | 2.5e | 2.5e | 2.2e | 2.4e | 2.4e | 2.2e | 2.3e | 2.3e | 2.1e |
| | 230 | 610 | 2.4e | 2.4e | 2.2e | 2.3e | 2.3e | 2.1e | 2.1e | 2.1e | 2.0e | 2.0e | 2.0e | 1.9e | 1.9e | 1.9e | 1.9e | 1.9e | 1.9e | 1.8e |
| **362S300-43** | 230 | 305 | 4.1 | 3.6 | 3.1 | 3.8 | 3.5 | 2.9 | 3.6 | 3.3 | 2.8 | 3.4 | 3.2 | 2.7 | 3.2 | 3.1 | 2.6 | 3.1 | 3.0 | 2.6 |
| | 230 | 406 | 3.5 | 3.3 | 2.8 | 3.3 | 3.2 | 2.7 | 3.1 | 3.0 | 2.6 | 2.9 | 2.9 | 2.5 | 2.8 | 2.8 | 2.4 | 2.7 | 2.7 | 2.3 |
| | 230 | 610 | 2.9 | 2.9 | 2.4 | 2.7 | 2.7 | 2.3 | 2.5 | 2.5 | 2.2 | 2.4 | 2.4 | 2.2 | 2.3e | 2.3e | 2.1 | 2.2e | 2.2e | 2.0e |
| **362S300-54** | 345 | 305 | 4.4 | 3.8 | 3.2 | 4.2 | 3.7 | 3.1 | 4.0 | 3.5 | 3.0 | 3.9 | 3.4 | 2.9 | 3.8 | 3.3 | 2.8 | 3.7 | 3.2 | 2.7 |
| | 345 | 406 | 4.0 | 3.5 | 2.9 | 3.8 | 3.3 | 2.8 | 3.7 | 3.2 | 2.7 | 3.5 | 3.1 | 2.6 | 3.4 | 3.0 | 2.5 | 3.3 | 2.9 | 2.5 |
| | 345 | 610 | 3.5 | 3.1 | 2.6 | 3.3 | 2.9 | 2.5 | 3.2 | 2.8 | 2.4 | 3.1 | 2.7 | 2.3 | 3.0 | 2.6 | 2.2 | 2.9 | 2.5 | 2.1 |
| **362S300-68** | 345 | 305 | 4.8 | 4.2 | 3.5 | 4.6 | 4.0 | 3.4 | 4.4 | 3.8 | 3.2 | 4.2 | 3.7 | 3.1 | 4.1 | 3.6 | 3.0 | 4.0 | 3.5 | 2.9 |
| | 345 | 406 | 4.3 | 3.8 | 3.2 | 4.2 | 3.6 | 3.1 | 4.0 | 3.5 | 2.9 | 3.9 | 3.4 | 2.8 | 3.7 | 3.3 | 2.8 | 3.6 | 3.2 | 2.7 |
| | 345 | 610 | 3.8 | 3.3 | 2.8 | 3.6 | 3.2 | 2.7 | 3.5 | 3.1 | 2.6 | 3.4 | 2.9 | 2.5 | 3.3 | 2.9 | 2.4 | 3.2 | 2.8 | 2.3 |
| **362S300-97** | 345 | 305 | 5.4 | 4.7 | 4.0 | 5.1 | 4.5 | 3.8 | 5.0 | 4.3 | 3.6 | 4.8 | 4.2 | 3.5 | 4.6 | 4.0 | 3.4 | 4.5 | 3.9 | 3.3 |
| | 345 | 406 | 4.9 | 4.3 | 3.6 | 4.7 | 4.1 | 3.4 | 4.5 | 3.9 | 3.3 | 4.3 | 3.8 | 3.2 | 4.2 | 3.7 | 3.1 | 4.1 | 3.6 | 3.0 |
| | 345 | 610 | 4.3 | 3.7 | 3.1 | 4.1 | 3.6 | 3.0 | 3.9 | 3.4 | 2.9 | 3.8 | 3.3 | 2.8 | 3.7 | 3.2 | 2.7 | 3.6 | 3.1 | 2.6 |

**NOTES:**

1) $p = I_w \{qC_eC_gC_p\}$; $I_w$ of 0.75 has been incorpotated in the deflection values of the table.
The parameters in the bracket { } must be determined by the design professional in accordance with the NBCC.

2) "e" web stiffeners required at ends.

Bailey Metal Products, Dass Metal Products, DCM Metal Corp., EB Métal Inc., Imperial Building Products, Manugypse, Groupe UP, Trebor Building Products Ltd.

## SINGLE SPAN CURTAIN WALL LIMITING HEIGHTS (m)

| Stud Designation | Specified Loads $F_y$ (MPa) | Spacing (mm) | 1.75 kPa | | | 2.00 kPa | | | 2.25 kPa | | | 2.50 kPa | | | 2.75 kPa | | | 3.00 kPa | | |
|---|---|---|---|---|---|---|---|---|---|---|---|---|---|---|---|---|---|---|---|---|
| | | | L/240 | L/360 | L/600 | L/240 | L/360 | L/600 | L/240 | L/360 | L/600 | L/240 | L/360 | L/600 | L/240 | L/360 | L/600 | L/240 | L/360 | L/600 |
| **400S125-33** | 230 | 305 | 2.6 | 2.6 | 2.4 | 2.4 | 2.4 | 2.3 | 2.3 | 2.3 | 2.2 | 2.2 | 2.2 | 2.1 | 2.1 | 2.1 | 2.1 | 2.0 | 2.0 | 2.0 |
| | 230 | 406 | 2.2 | 2.2 | 2.2 | 2.1 | 2.1 | 2.1 | 2.0 | 2.0 | 2.0 | 1.9 | 1.9 | 1.9 | 1.8 | 1.8 | 1.8 | 1.7 | 1.7 | 1.7 |
| | 230 | 610 | 1.8 | 1.8 | 1.8 | 1.7 | 1.7 | 1.7 | 1.6e | 1.6e | 1.6e | 1.5e | 1.5e | 1.5e | 1.5e | 1.5e | 1.5e | 1.4e | 1.4e | 1.4e |
| **400S125-43** | 230 | 305 | 3.1 | 3.1 | 2.6 | 2.9 | 2.9 | 2.5 | 2.7 | 2.7 | 2.4 | 2.6 | 2.6 | 2.3 | 2.5 | 2.5 | 2.3 | 2.4 | 2.4 | 2.2 |
| | 230 | 406 | 2.7 | 2.7 | 2.4 | 2.5 | 2.5 | 2.3 | 2.4 | 2.4 | 2.2 | 2.2 | 2.2 | 2.1 | 2.1 | 2.1 | 2.1 | 2.1 | 2.1 | 2.0 |
| | 230 | 610 | 2.2 | 2.2 | 2.1 | 2.1 | 2.1 | 2.0 | 1.9 | 1.9 | 1.9 | 1.8 | 1.8 | 1.8 | 1.7 | 1.7 | 1.7 | 1.7 | 1.7 | 1.7 |
| **400S125-54** | 345 | 305 | 3.8 | 3.3 | 2.8 | 3.7 | 3.2 | 2.7 | 3.5 | 3.1 | 2.6 | 3.4 | 3.0 | 2.5 | 3.3 | 2.9 | 2.4 | 3.2 | 2.8 | 2.4 |
| | 345 | 406 | 3.5 | 3.0 | 2.6 | 3.3 | 2.9 | 2.4 | 3.2 | 2.8 | 2.4 | 3.0 | 2.7 | 2.3 | 2.9 | 2.6 | 2.2 | 2.7 | 2.5 | 2.1 |
| | 345 | 610 | 2.9 | 2.7 | 2.2 | 2.7 | 2.5 | 2.1 | 2.6 | 2.4 | 2.1 | 2.4 | 2.4 | 2.0 | 2.3 | 2.3 | 1.9 | 2.2 | 2.2 | 1.9 |
| **400S162-33** | 230 | 305 | 3.2 | 3.1 | 2.7 | 3.0 | 3.0 | 2.5 | 2.9 | 2.9 | 2.4 | 2.7 | 2.7 | 2.4 | 2.6 | 2.6 | 2.3 | 2.5e | 2.5e | 2.2 |
| | 230 | 406 | 2.8 | 2.8 | 2.4 | 2.6 | 2.6 | 2.3 | 2.5e | 2.5e | 2.2 | 2.4e | 2.4e | 2.1 | 2.2e | 2.2e | 2.1e | 2.1e | 2.1e | 2.0e |
| | 230 | 610 | 2.3e | 2.3e | 2.1e | 2.1e | 2.1e | 2.0e | 2.0e | 2.0e | 1.9e | 1.9e | 1.9e | 1.9e | 1.8e | 1.8e | 1.8e | 1.8e | 1.8e | 1.8e |
| **400S162-43** | 230 | 305 | 3.9 | 3.4 | 2.9 | 3.6 | 3.3 | 2.8 | 3.4 | 3.2 | 2.7 | 3.2 | 3.0 | 2.6 | 3.1 | 2.9 | 2.5 | 2.9 | 2.9 | 2.4 |
| | 230 | 406 | 3.3 | 3.1 | 2.6 | 3.1 | 3.0 | 2.5 | 2.9 | 2.9 | 2.4 | 2.8 | 2.8 | 2.3 | 2.7 | 2.7 | 2.3 | 2.5 | 2.5 | 2.2 |
| | 230 | 610 | 2.7 | 2.7 | 2.3 | 2.5 | 2.5 | 2.2 | 2.4 | 2.4 | 2.1 | 2.3 | 2.3 | 2.0 | 2.2 | 2.2 | 2.0 | 2.1e | 2.1e | 1.9 |
| **400S162-54** | 345 | 305 | 4.2 | 3.7 | 3.1 | 4.0 | 3.5 | 3.0 | 3.9 | 3.4 | 2.8 | 3.7 | 3.3 | 2.7 | 3.6 | 3.2 | 2.7 | 3.5 | 3.1 | 2.6 |
| | 345 | 406 | 3.8 | 3.3 | 2.8 | 3.7 | 3.2 | 2.7 | 3.5 | 3.1 | 2.6 | 3.4 | 3.0 | 2.5 | 3.3 | 2.9 | 2.4 | 3.2 | 2.8 | 2.4 |
| | 345 | 610 | 3.3 | 2.9 | 2.5 | 3.2 | 2.8 | 2.4 | 3.1 | 2.7 | 2.3 | 3.0 | 2.6 | 2.2 | 2.9 | 2.5 | 2.1 | 2.8 | 2.4 | 2.1 |
| **400S162-68** | 345 | 305 | 4.5 | 3.9 | 3.3 | 4.3 | 3.8 | 3.2 | 4.1 | 3.6 | 3.0 | 4.0 | 3.5 | 2.9 | 3.9 | 3.4 | 2.9 | 3.8 | 3.3 | 2.8 |
| | 345 | 406 | 4.1 | 3.6 | 3.0 | 3.9 | 3.4 | 2.9 | 3.8 | 3.3 | 2.8 | 3.6 | 3.2 | 2.7 | 3.5 | 3.1 | 2.6 | 3.4 | 3.0 | 2.5 |
| | 345 | 610 | 3.6 | 3.1 | 2.6 | 3.4 | 3.0 | 2.5 | 3.3 | 2.9 | 2.4 | 3.2 | 2.8 | 2.3 | 3.1 | 2.7 | 2.3 | 3.0 | 2.6 | 2.2 |
| **400S162-97** | 345 | 305 | 5.0 | 4.3 | 3.7 | 4.8 | 4.1 | 3.5 | 4.6 | 4.0 | 3.4 | 4.4 | 3.9 | 3.2 | 4.3 | 3.7 | 3.1 | 4.1 | 3.6 | 3.1 |
| | 345 | 406 | 4.5 | 3.9 | 3.3 | 4.3 | 3.8 | 3.2 | 4.1 | 3.6 | 3.1 | 4.0 | 3.5 | 3.0 | 3.9 | 3.4 | 2.9 | 3.8 | 3.3 | 2.8 |
| | 345 | 610 | 3.9 | 3.4 | 2.9 | 3.8 | 3.3 | 2.8 | 3.6 | 3.2 | 2.7 | 3.5 | 3.1 | 2.6 | 3.4 | 3.0 | 2.5 | 3.3 | 2.9 | 2.4 |
| **400S200-33** | 230 | 305 | 3.4 | 3.3 | 2.8 | 3.2 | 3.2 | 2.7 | 3.0 | 3.0 | 2.6 | 2.9e | 2.9e | 2.5 | 2.7e | 2.7e | 2.4 | 2.6e | 2.6e | 2.3 |
| | 230 | 406 | 3.0 | 3.0 | 2.5 | 2.8e | 2.8e | 2.4 | 2.6e | 2.6e | 2.3 | 2.5e | 2.5e | 2.2e | 2.4e | 2.4e | 2.2e | 2.3e | 2.3e | 2.1e |
| | 230 | 610 | 2.4e | 2.4e | 2.2e | 2.3e | 2.3e | 2.1e | 2.1e | 2.1e | 2.0e | 2.0e | 2.0e | 2.0e | 1.9e | 1.9e | 1.9e | 1.9e | 1.9e | 1.8e |
| **400S200-43** | 230 | 305 | 4.1 | 3.6 | 3.0 | 3.9 | 3.5 | 2.9 | 3.6 | 3.3 | 2.8 | 3.5 | 3.2 | 2.7 | 3.3 | 3.1 | 2.6 | 3.2 | 3.0 | 2.5 |
| | 230 | 406 | 3.6 | 3.3 | 2.8 | 3.3 | 3.1 | 2.6 | 3.2 | 3.0 | 2.5 | 3.0 | 2.9 | 2.5 | 2.9 | 2.8 | 2.4 | 2.7 | 2.7 | 2.3 |
| | 230 | 610 | 2.9 | 2.9 | 2.4 | 2.7 | 2.7 | 2.3 | 2.6 | 2.6 | 2.2 | 2.4e | 2.4e | 2.1 | 2.3e | 2.3e | 2.1 | 2.2e | 2.2e | 2.0e |
| **400S200-54** | 345 | 305 | 4.4 | 3.9 | 3.3 | 4.2 | 3.7 | 3.1 | 4.1 | 3.6 | 3.0 | 3.9 | 3.4 | 2.9 | 3.8 | 3.3 | 2.8 | 3.7 | 3.2 | 2.7 |
| | 345 | 406 | 4.0 | 3.5 | 3.0 | 3.9 | 3.4 | 2.8 | 3.7 | 3.2 | 2.7 | 3.6 | 3.1 | 2.6 | 3.5 | 3.0 | 2.6 | 3.4 | 2.9 | 2.5 |
| | 345 | 610 | 3.5 | 3.1 | 2.6 | 3.4 | 2.9 | 2.5 | 3.2 | 2.8 | 2.4 | 3.1 | 2.7 | 2.3 | 3.0 | 2.6 | 2.2 | 2.9 | 2.6 | 2.2 |
| **400S200-68** | 345 | 305 | 4.8 | 4.2 | 3.5 | 4.5 | 4.0 | 3.3 | 4.4 | 3.8 | 3.2 | 4.2 | 3.7 | 3.1 | 4.1 | 3.6 | 3.0 | 4.0 | 3.5 | 2.9 |
| | 345 | 406 | 4.3 | 3.8 | 3.2 | 4.1 | 3.6 | 3.0 | 4.0 | 3.5 | 2.9 | 3.8 | 3.3 | 2.8 | 3.7 | 3.2 | 2.7 | 3.6 | 3.2 | 2.7 |
| | 345 | 610 | 3.8 | 3.3 | 2.8 | 3.6 | 3.2 | 2.7 | 3.5 | 3.0 | 2.6 | 3.3 | 2.9 | 2.5 | 3.2 | 2.8 | 2.4 | 3.2 | 2.8 | 2.3 |
| **400S200-97** | 345 | 305 | 5.3 | 4.6 | 3.9 | 5.0 | 4.4 | 3.7 | 4.8 | 4.2 | 3.6 | 4.7 | 4.1 | 3.4 | 4.5 | 4.0 | 3.3 | 4.4 | 3.8 | 3.2 |
| | 345 | 406 | 4.8 | 4.2 | 3.5 | 4.6 | 4.0 | 3.4 | 4.4 | 3.8 | 3.2 | 4.2 | 3.7 | 3.1 | 4.1 | 3.6 | 3.0 | 4.0 | 3.5 | 2.9 |
| | 345 | 610 | 4.2 | 3.6 | 3.1 | 4.0 | 3.5 | 2.9 | 3.8 | 3.4 | 2.8 | 3.7 | 3.2 | 2.7 | 3.6 | 3.1 | 2.6 | 3.5 | 3.0 | 2.6 |
| **400S250-33** | 230 | 305 | 3.6 | 3.4 | 2.9 | 3.3 | 3.3 | 2.8 | 3.1 | 3.1 | 2.7 | 3.0e | 3.0e | 2.6 | 2.8e | 2.8e | 2.5 | 2.7e | 2.7e | 2.4e |
| | 230 | 406 | 3.1e | 3.1e | 2.6 | 2.9e | 2.9e | 2.5 | 2.7e | 2.7e | 2.4e | 2.6e | 2.6e | 2.3e | 2.5e | 2.5e | 2.3e | 2.4e | 2.4e | 2.2e |
| | 230 | 610 | 2.5e | 2.5e | 2.3e | 2.4e | 2.4e | 2.2e | 2.2e | 2.2e | 2.1e | 2.1e | 2.1e | 2.0e | 2.0e | 2.0e | 2.0e | 1.9e | 1.9e | 1.9e |
| **400S250-43** | 230 | 305 | 4.2 | 3.8 | 3.2 | 4.0 | 3.6 | 3.1 | 3.7 | 3.5 | 2.9 | 3.6 | 3.4 | 2.8 | 3.4 | 3.3 | 2.8 | 3.2 | 3.2 | 2.7 |
| | 230 | 406 | 3.7 | 3.4 | 2.9 | 3.4 | 3.3 | 2.8 | 3.2 | 3.2 | 2.7 | 3.1 | 3.1 | 2.6 | 2.9 | 2.9 | 2.5 | 2.8 | 2.8 | 2.4 |
| | 230 | 610 | 3.0 | 3.0 | 2.5 | 2.8 | 2.8 | 2.4 | 2.6 | 2.6 | 2.3 | 2.5e | 2.5e | 2.3 | 2.4e | 2.4e | 2.2e | 2.3e | 2.3e | 2.1e |
| **400S250-54** | 345 | 305 | 4.6 | 4.0 | 3.4 | 4.4 | 3.9 | 3.2 | 4.2 | 3.7 | 3.1 | 4.1 | 3.6 | 3.0 | 4.0 | 3.5 | 2.9 | 3.9 | 3.4 | 2.8 |
| | 345 | 406 | 4.2 | 3.7 | 3.1 | 4.0 | 3.5 | 3.0 | 3.9 | 3.4 | 2.8 | 3.7 | 3.2 | 2.7 | 3.6 | 3.1 | 2.7 | 3.5 | 3.1 | 2.6 |
| | 345 | 610 | 3.7 | 3.2 | 2.7 | 3.5 | 3.1 | 2.6 | 3.4 | 2.9 | 2.5 | 3.2 | 2.8 | 2.4 | 3.1 | 2.7 | 2.3 | 3.0 | 2.7 | 2.3 |
| **400S250-68** | 345 | 305 | 5.0 | 4.4 | 3.7 | 4.8 | 4.2 | 3.5 | 4.6 | 4.0 | 3.4 | 4.4 | 3.9 | 3.3 | 4.3 | 3.8 | 3.2 | 4.2 | 3.6 | 3.1 |
| | 345 | 406 | 4.5 | 4.0 | 3.3 | 4.3 | 3.8 | 3.2 | 4.2 | 3.6 | 3.1 | 4.0 | 3.5 | 3.0 | 3.9 | 3.4 | 2.9 | 3.8 | 3.3 | 2.8 |
| | 345 | 610 | 4.0 | 3.5 | 2.9 | 3.8 | 3.3 | 2.8 | 3.6 | 3.2 | 2.7 | 3.5 | 3.1 | 2.6 | 3.4 | 3.0 | 2.5 | 3.3 | 2.9 | 2.4 |
| **400S250-97** | 345 | 305 | 5.6 | 4.9 | 4.1 | 5.3 | 4.6 | 3.9 | 5.1 | 4.5 | 3.8 | 4.9 | 4.3 | 3.6 | 4.8 | 4.2 | 3.5 | 4.6 | 4.1 | 3.4 |
| | 345 | 406 | 5.1 | 4.4 | 3.7 | 4.8 | 4.2 | 3.6 | 4.6 | 4.1 | 3.4 | 4.5 | 3.9 | 3.3 | 4.3 | 3.8 | 3.2 | 4.2 | 3.7 | 3.1 |
| | 345 | 610 | 4.4 | 3.9 | 3.3 | 4.2 | 3.7 | 3.1 | 4.1 | 3.5 | 3.0 | 3.9 | 3.4 | 2.9 | 3.8 | 3.3 | 2.8 | 3.7 | 3.2 | 2.7 |
| **400S300-33** | 230 | 305 | 3.6 | 3.5 | 3.0 | 3.4 | 3.4 | 2.8 | 3.2e | 3.2e | 2.7 | 3.0e | 3.0e | 2.6 | 2.9e | 2.9e | 2.6 | 2.8e | 2.8e | 2.5e |
| | 230 | 406 | 3.1e | 3.1e | 2.7 | 2.9e | 2.9e | 2.6 | 2.8e | 2.8e | 2.5e | 2.6e | 2.6e | 2.4e | 2.5e | 2.5e | 2.3e | 2.4e | 2.4e | 2.3e |
| | 230 | 610 | 2.6e | 2.6e | 2.4e | 2.4e | 2.4e | 2.3e | 2.3e | 2.3e | 2.2e | 2.1e | 2.1e | 2.1e | 2.0e | 2.0e | 2.0e | 2.0e | 2.0e | 2.0e |
| **400S300-43** | 230 | 305 | 4.3 | 3.9 | 3.3 | 4.0 | 3.7 | 3.1 | 3.8 | 3.6 | 3.0 | 3.6 | 3.5 | 2.9 | 3.4 | 3.4 | 2.8 | 3.3 | 3.3 | 2.8 |
| | 230 | 406 | 3.7 | 3.5 | 3.0 | 3.5 | 3.4 | 2.9 | 3.3 | 3.3 | 2.8 | 3.1 | 3.1 | 2.7 | 3.0 | 3.0 | 2.6 | 2.8 | 2.8 | 2.5 |
| | 230 | 610 | 3.0 | 3.0 | 2.6 | 2.8 | 2.8 | 2.5 | 2.7e | 2.7e | 2.4 | 2.5e | 2.5e | 2.3 | 2.4e | 2.4e | 2.2e | 2.3e | 2.3e | 2.2e |
| **400S300-54** | 345 | 305 | 4.7 | 4.1 | 3.5 | 4.5 | 4.0 | 3.3 | 4.4 | 3.8 | 3.2 | 4.2 | 3.7 | 3.1 | 4.1 | 3.6 | 3.0 | 4.0 | 3.5 | 2.9 |
| | 345 | 406 | 4.3 | 3.8 | 3.2 | 4.1 | 3.6 | 3.0 | 4.0 | 3.5 | 2.9 | 3.8 | 3.3 | 2.8 | 3.7 | 3.2 | 2.7 | 3.6 | 3.1 | 2.6 |
| | 345 | 610 | 3.8 | 3.3 | 2.8 | 3.6 | 3.1 | 2.6 | 3.5 | 3.0 | 2.5 | 3.3 | 2.9 | 2.5 | 3.2 | 2.8 | 2.4 | 3.1 | 2.7 | 2.3 |
| **400S300-68** | 345 | 305 | 5.2 | 4.5 | 3.8 | 4.9 | 4.3 | 3.6 | 4.7 | 4.1 | 3.5 | 4.6 | 4.0 | 3.4 | 4.4 | 3.9 | 3.3 | 4.3 | 3.8 | 3.2 |
| | 345 | 406 | 4.7 | 4.1 | 3.4 | 4.5 | 3.9 | 3.3 | 4.3 | 3.8 | 3.2 | 4.2 | 3.6 | 3.1 | 4.0 | 3.5 | 3.0 | 3.9 | 3.4 | 2.9 |
| | 345 | 610 | 4.1 | 3.6 | 3.0 | 3.9 | 3.4 | 2.9 | 3.8 | 3.3 | 2.8 | 3.6 | 3.2 | 2.7 | 3.5 | 3.1 | 2.6 | 3.4 | 3.0 | 2.5 |
| **400S300-97** | 345 | 305 | 5.8 | 5.1 | 4.3 | 5.5 | 4.8 | 4.1 | 5.3 | 4.7 | 3.9 | 5.1 | 4.5 | 3.8 | 5.0 | 4.4 | 3.7 | 4.8 | 4.2 | 3.6 |
| | 345 | 406 | 5.3 | 4.6 | 3.9 | 5.0 | 4.4 | 3.7 | 4.8 | 4.2 | 3.6 | 4.7 | 4.1 | 3.4 | 4.5 | 4.0 | 3.3 | 4.4 | 3.8 | 3.2 |
| | 345 | 610 | 4.6 | 4.0 | 3.4 | 4.4 | 3.8 | 3.2 | 4.2 | 3.7 | 3.1 | 4.1 | 3.6 | 3.0 | 4.0 | 3.5 | 2.9 | 3.8 | 3.4 | 2.8 |

**NOTES:**

1) $p = I_w \{qC_eC_gC_p\}$; $I_w$ of 0.75 has been incorpotated in the deflection values of the table.
The parameters in the bracket { } must be determined by the design professional in accordance with the NBCC.

2) "e" web stiffeners required at ends.

Bailey Metal Products, Dass Metal Products, DCM Metal Corp., EB Métal Inc., Imperial Building Products, Manugypse, Groupe UP, Trebor Building Products Ltd.

## SINGLE SPAN CURTAIN WALL LIMITING HEIGHTS (m)

| Stud Designation | Specified Loads $F_y$ (MPa) | Spacing (mm) | 1.75 kPa | | | 2.00 kPa | | | 2.25 kPa | | | 2.50 kPa | | | 2.75 kPa | | | 3.00 kPa | | |
|---|---|---|---|---|---|---|---|---|---|---|---|---|---|---|---|---|---|---|---|---|
| | | | L/240 | L/360 | L/600 | L/240 | L/360 | L/600 | L/240 | L/360 | L/600 | L/240 | L/360 | L/600 | L/240 | L/360 | L/600 | L/240 | L/360 | L/600 |
| **600S125-33** | 230 | 305 | 3.2 | 3.2 | 3.2 | 3.0 | 3.0 | 3.0 | 2.8 | 2.8 | 2.8 | 2.7e | 2.7e | 2.7e | 2.6e | 2.6e | 2.6e | 2.5e | 2.5e | 2.5e |
| | 230 | 406 | 2.8 | 2.8 | 2.8 | 2.6e | 2.6e | 2.6e | 2.5e | 2.5e | 2.5e | 2.3e | 2.3e | 2.3e | 2.2e | 2.2e | 2.2e | 2.1e | 2.1e | 2.1e |
| | 230 | 610 | 2.3e | 2.3e | 2.3e | 2.1e | 2.1e | 2.1e | 2.0e | 2.0e | 2.0e | 1.9e | 1.9e | 1.9e | 1.8e | 1.8e | 1.8e | 1.7e | 1.7e | 1.7e |
| **600S125-43** | 230 | 305 | 3.9 | 3.9 | 3.6 | 3.7 | 3.7 | 3.5 | 3.5 | 3.5 | 3.4 | 3.3 | 3.3 | 3.2 | 3.1 | 3.1 | 3.1 | 3.0 | 3.0 | 3.0 |
| | 230 | 406 | 3.4 | 3.4 | 3.3 | 3.2 | 3.2 | 3.2 | 3.0 | 3.0 | 3.0 | 2.8 | 2.8 | 2.8 | 2.7 | 2.7 | 2.7 | 2.6 | 2.6 | 2.6 |
| | 230 | 610 | 2.8 | 2.8 | 2.8 | 2.6 | 2.6 | 2.6 | 2.4 | 2.4 | 2.4 | 2.3e | 2.3e | 2.3e | 2.2e | 2.2e | 2.2e | 2.1e | 2.1e | 2.1e |
| **600S125-54** | 345 | 305 | 5.3 | 4.6 | 3.9 | 4.9 | 4.4 | 3.7 | 4.6 | 4.3 | 3.6 | 4.4 | 4.1 | 3.5 | 4.2 | 4.0 | 3.4 | 4.0 | 3.9 | 3.3 |
| | 345 | 406 | 4.6 | 4.2 | 3.6 | 4.3 | 4.0 | 3.4 | 4.0 | 3.9 | 3.3 | 3.8 | 3.7 | 3.2 | 3.6 | 3.6 | 3.1 | 3.5 | 3.5 | 3.0 |
| | 345 | 610 | 3.7 | 3.7 | 3.1 | 3.5 | 3.5 | 3.0 | 3.3 | 3.3 | 2.9 | 3.1 | 3.1 | 2.8 | 3.0 | 3.0 | 2.7 | 2.8 | 2.8 | 2.6 |
| **600S162-33** | 230 | 305 | 4.1e | 4.1e | 3.6 | 3.8e | 3.8e | 3.5e | 3.6e | 3.6e | 3.4e | 3.4e | 3.4e | 3.2e | 3.2e | 3.2e | 3.1e | 3.1e | 3.1e | 3.0e |
| | 230 | 406 | 3.5e | 3.5e | 3.3e | 3.3e | 3.3e | 3.2e | 3.1e | 3.1e | 3.0e | 2.9e | 2.9e | 2.9e | 2.8e | 2.8e | 2.8e | 2.7e | 2.7e | 2.7e |
| | 230 | 610 | 2.9e | 2.9e | 2.9e | 2.7e | 2.7e | 2.7e | 2.5e | 2.5e | 2.5e | 2.4e | 2.4e | 2.4e | 2.3e | 2.3e | 2.3e | 2.2e | 2.2e | 2.2e |
| **600S162-43** | 230 | 305 | 4.9 | 4.7 | 4.0 | 4.5 | 4.5 | 3.8 | 4.3 | 4.3 | 3.7 | 4.1 | 4.1 | 3.5 | 3.9 | 3.9 | 3.4 | 3.7 | 3.7 | 3.3 |
| | 230 | 406 | 4.2 | 4.2 | 3.6 | 3.9 | 3.9 | 3.5 | 3.7 | 3.7 | 3.3 | 3.5e | 3.5e | 3.2 | 3.4e | 3.4e | 3.1e | 3.2e | 3.2e | 3.0e |
| | 230 | 610 | 3.4e | 3.4e | 3.2 | 3.2e | 3.2e | 3.0e | 3.0e | 3.0e | 2.9e | 2.9e | 2.9e | 2.8e | 2.7e | 2.7e | 2.7e | 2.6e | 2.6e | 2.6e |
| **600S162-54** | 345 | 305 | 5.8 | 5.1 | 4.3 | 5.5 | 4.8 | 4.1 | 5.3 | 4.6 | 3.9 | 5.1 | 4.5 | 3.8 | 5 | 4.3 | 3.7 | 4.8 | 4.2 | 3.6 |
| | 345 | 406 | 5.3 | 4.6 | 3.9 | 5.0 | 4.4 | 3.7 | 4.8 | 4.2 | 3.6 | 4.7 | 4.1 | 3.4 | 4.5 | 3.9 | 3.3 | 4.3 | 3.8 | 3.2 |
| | 345 | 610 | 4.6 | 4.0 | 3.4 | 4.3 | 3.8 | 3.2 | 4.0 | 3.7 | 3.1 | 3.8 | 3.6 | 3.0 | 3.6 | 3.4 | 2.9 | 3.5 | 3.3 | 2.8 |
| **600S162-68** | 345 | 305 | 6.2 | 5.4 | 4.6 | 5.9 | 5.2 | 4.4 | 5.7 | 5.0 | 4.2 | 5.5 | 4.8 | 4.1 | 5.3 | 4.7 | 3.9 | 5.2 | 4.5 | 3.8 |
| | 345 | 406 | 5.6 | 4.9 | 4.1 | 5.4 | 4.7 | 4.0 | 5.2 | 4.5 | 3.8 | 5.0 | 4.4 | 3.7 | 4.8 | 4.2 | 3.6 | 4.7 | 4.1 | 3.5 |
| | 345 | 610 | 4.9 | 4.3 | 3.6 | 4.7 | 4.1 | 3.5 | 4.5 | 4.0 | 3.3 | 4.4 | 3.8 | 3.2 | 4.2 | 3.7 | 3.1 | 4.1 | 3.6 | 3.0 |
| **600S162-97** | 345 | 305 | 6.9 | 6.0 | 5.1 | 6.6 | 5.7 | 4.8 | 6.3 | 5.5 | 4.7 | 6.1 | 5.3 | 4.5 | 5.9 | 5.2 | 4.4 | 5.7 | 5.0 | 4.2 |
| | 345 | 406 | 6.2 | 5.5 | 4.6 | 6.0 | 5.2 | 4.4 | 5.7 | 5.0 | 4.2 | 5.5 | 4.8 | 4.1 | 5.4 | 4.7 | 4.0 | 5.2 | 4.6 | 3.8 |
| | 345 | 610 | 5.5 | 4.8 | 4.0 | 5.2 | 4.6 | 3.8 | 5.0 | 4.4 | 3.7 | 4.8 | 4.2 | 3.6 | 4.7 | 4.1 | 3.5 | 4.6 | 4.0 | 3.4 |
| **600S200-33** | 230 | 305 | 4.4e | 4.4e | 3.8 | 4.1e | 4.1e | 3.6e | 3.8e | 3.8e | 3.5e | 3.6e | 3.6e | 3.4e | 3.5e | 3.5e | 3.3e | 3.3e | 3.3e | 3.2e |
| | 230 | 406 | 3.8e | 3.8e | 3.5e | 3.5e | 3.5e | 3.3e | 3.3e | 3.3e | 3.2e | 3.2e | 3.2e | 3.1e | 3.0e | 3.0e | 3.0e | 2.9e | 2.9e | 2.9e |
| | 230 | 610 | 3.1e | 3.1e | 3.0e | 2.9e | 2.9e | 2.9e | 2.7e | 2.7e | 2.7e | 2.6e | 2.6e | 2.6e | 2.5e | 2.5e | 2.5e | 2.4e | 2.4e | 2.4e |
| **600S200-43** | 230 | 305 | 5.2 | 4.9 | 4.2 | 4.9 | 4.7 | 4.0 | 4.6 | 4.5 | 3.8 | 4.4 | 4.4 | 3.7 | 4.1e | 4.1e | 3.6 | 4.0e | 4.0e | 3.5 |
| | 230 | 406 | 4.5 | 4.5 | 3.8 | 4.2 | 4.2 | 3.6 | 4.0e | 4.0e | 3.5 | 3.8e | 3.8e | 3.4 | 3.6e | 3.6e | 3.3e | 3.4e | 3.4e | 3.2e |
| | 230 | 610 | 3.7e | 3.7e | 3.3e | 3.4e | 3.4e | 3.2e | 3.2e | 3.2e | 3.0e | 3.1e | 3.1e | 2.9e | 2.9e | 2.9e | 2.8e | 2.8e | 2.8e | 2.8e |
| **600S200-54** | 345 | 305 | 6.1 | 5.3 | 4.5 | 5.8 | 5.1 | 4.3 | 5.6 | 4.9 | 4.1 | 5.4 | 4.7 | 4.0 | 5.2 | 4.6 | 3.9 | 5.1 | 4.4 | 3.7 |
| | 345 | 406 | 5.5 | 4.8 | 4.1 | 5.3 | 4.6 | 3.9 | 5.1 | 4.4 | 3.7 | 4.9 | 4.3 | 3.6 | 4.7 | 4.1 | 3.5 | 4.6 | 4.0 | 3.4 |
| | 345 | 610 | 4.8 | 4.2 | 3.6 | 4.6 | 4.0 | 3.4 | 4.3 | 3.9 | 3.3 | 4.1 | 3.7 | 3.2 | 3.9 | 3.6 | 3.1 | 3.7 | 3.5 | 3.0 |
| **600S200-68** | 345 | 305 | 6.5 | 5.7 | 4.8 | 6.2 | 5.4 | 4.6 | 6.0 | 5.2 | 4.4 | 5.8 | 5.1 | 4.3 | 5.6 | 4.9 | 4.1 | 5.4 | 4.8 | 4.0 |
| | 345 | 406 | 5.9 | 5.2 | 4.4 | 5.7 | 4.9 | 4.2 | 5.4 | 4.8 | 4.0 | 5.3 | 4.6 | 3.9 | 5.1 | 4.5 | 3.8 | 4.9 | 4.3 | 3.6 |
| | 345 | 610 | 5.2 | 4.5 | 3.8 | 4.9 | 4.3 | 3.6 | 4.8 | 4.2 | 3.5 | 4.6 | 4.0 | 3.4 | 4.5 | 3.9 | 3.3 | 4.3 | 3.8 | 3.2 |
| **600S200-97** | 345 | 305 | 7.2 | 6.3 | 5.3 | 6.9 | 6.0 | 5.1 | 6.7 | 5.8 | 4.9 | 6.4 | 5.6 | 4.7 | 6.2 | 5.4 | 4.6 | 6.0 | 5.3 | 4.5 |
| | 345 | 406 | 6.6 | 5.7 | 4.8 | 6.3 | 5.5 | 4.6 | 6.0 | 5.3 | 4.5 | 5.8 | 5.1 | 4.3 | 5.7 | 4.9 | 4.2 | 5.5 | 4.8 | 4.0 |
| | 345 | 610 | 5.7 | 5.0 | 4.2 | 5.5 | 4.8 | 4.0 | 5.3 | 4.6 | 3.9 | 5.1 | 4.5 | 3.8 | 4.9 | 4.3 | 3.6 | 4.8 | 4.2 | 3.5 |
| **600S250-33** | 230 | 305 | 4.4e | 4.4e | 3.9e | 4.2e | 4.2e | 3.8e | 3.9e | 3.9e | 3.6e | 3.7e | 3.7e | 3.5e | 3.5e | 3.5e | 3.4e | 3.4e | 3.4e | 3.3e |
| | 230 | 406 | 3.9e | 3.9e | 3.6e | 3.6e | 3.6e | 3.4e | 3.4e | 3.4e | 3.3e | 3.2e | 3.2e | 3.2e | 3.1e | 3.1e | 3.1e | 2.9e | 2.9e | 2.9e |
| | 230 | 610 | 3.1e | 3.1e | 3.1e | 2.9e | 2.9e | 2.9e | 2.8e | 2.8e | 2.8e | 2.6e | 2.6e | 2.6e | 2.5e | 2.5e | 2.5e | 2.4e | 2.4e | 2.4e |
| **600S250-43** | 230 | 305 | 5.3 | 5.2 | 4.4 | 5.0 | 4.9 | 4.2 | 4.7 | 4.7 | 4.0 | 4.5 | 4.5 | 3.9 | 4.3e | 4.3e | 3.7 | 4.1e | 4.1e | 3.6 |
| | 230 | 406 | 4.6 | 4.6 | 4.0 | 4.3e | 4.3e | 3.8 | 4.1e | 4.1e | 3.6 | 3.9e | 3.9e | 3.5e | 3.7e | 3.7e | 3.4e | 3.5e | 3.5e | 3.3e |
| | 230 | 610 | 3.8e | 3.8e | 3.5e | 3.5e | 3.5e | 3.3e | 3.3e | 3.3e | 3.2e | 3.2e | 3.2e | 3.1e | 3.0e | 3.0e | 3.0e | 2.9e | 2.9e | 2.9e |
| **600S250-54** | 345 | 305 | 6.3 | 5.5 | 4.6 | 6.0 | 5.2 | 4.4 | 5.8 | 5.0 | 4.3 | 5.6 | 4.9 | 4.1 | 5.4 | 4.7 | 4.0 | 5.2 | 4.6 | 3.9 |
| | 345 | 406 | 5.7 | 5.0 | 4.2 | 5.5 | 4.8 | 4.0 | 5.2 | 4.6 | 3.9 | 5.1 | 4.4 | 3.7 | 4.9 | 4.3 | 3.6 | 4.7 | 4.2 | 3.5 |
| | 345 | 610 | 5.0 | 4.4 | 3.7 | 4.7 | 4.2 | 3.5 | 4.4 | 4.0 | 3.4 | 4.2 | 3.9 | 3.3 | 4.0 | 3.7 | 3.2 | 3.8 | 3.6 | 3.1 |
| **600S250-68** | 345 | 305 | 6.8 | 5.9 | 5.0 | 6.5 | 5.7 | 4.8 | 6.3 | 5.5 | 4.6 | 6.0 | 5.3 | 4.5 | 5.9 | 5.1 | 4.3 | 5.7 | 5.0 | 4.2 |
| | 345 | 406 | 6.2 | 5.4 | 4.6 | 5.9 | 5.2 | 4.4 | 5.7 | 5.0 | 4.2 | 5.5 | 4.8 | 4.0 | 5.3 | 4.6 | 3.9 | 5.2 | 4.5 | 3.8 |
| | 345 | 610 | 5.4 | 4.7 | 4.0 | 5.2 | 4.5 | 3.8 | 5.0 | 4.3 | 3.7 | 4.8 | 4.2 | 3.5 | 4.6 | 4.1 | 3.4 | 4.5 | 3.9 | 3.3 |
| **600S250-97** | 345 | 305 | 7.6 | 6.6 | 5.6 | 7.3 | 6.4 | 5.4 | 7.0 | 6.1 | 5.2 | 6.7 | 5.9 | 5.0 | 6.5 | 5.7 | 4.8 | 6.4 | 5.5 | 4.7 |
| | 345 | 406 | 6.9 | 6.0 | 5.1 | 6.6 | 5.8 | 4.9 | 6.4 | 5.5 | 4.7 | 6.1 | 5.4 | 4.5 | 5.9 | 5.2 | 4.4 | 5.8 | 5.0 | 4.3 |
| | 345 | 610 | 6.0 | 5.3 | 4.4 | 5.8 | 5.0 | 4.3 | 5.5 | 4.8 | 4.1 | 5.4 | 4.7 | 3.9 | 5.2 | 4.5 | 3.8 | 5.0 | 4.4 | 3.7 |
| **600S300-33** | 230 | 305 | 4.5e | 4.5e | 4.0e | 4.2e | 4.2e | 3.9e | 4.0e | 4.0e | 3.7e | 3.8e | 3.8e | 3.6e | 3.6e | 3.6e | 3.5e | 3.4e | 3.4e | 3.4e |
| | 230 | 406 | 3.9e | 3.9e | 3.7e | 3.7e | 3.7e | 3.5e | 3.4e | 3.4e | 3.4e | 3.3e | 3.3e | 3.3e | 3.1e | 3.1e | 3.1e | 3.0e | 3.0e | 3.0e |
| | 230 | 610 | 3.2e | 3.2e | 3.2e | 3.0e | 3.0e | 3.0e | 2.8e | 2.8e | 2.8e | 2.7e | 2.7e | 2.7e | 2.5e | 2.5e | 2.5e | 2.4e | 2.4e | 2.4e |
| **600S300-43** | 230 | 305 | 5.4 | 5.3 | 4.5 | 5.1 | 5.1 | 4.3 | 4.8 | 4.8 | 4.1 | 4.5 | 4.5 | 4.0 | 4.3e | 4.3e | 3.8 | 4.1e | 4.1e | 3.7 |
| | 230 | 406 | 4.7 | 4.7 | 4.1 | 4.4e | 4.4e | 3.9 | 4.1e | 4.1e | 3.7 | 3.9e | 3.9e | 3.6e | 3.8e | 3.8e | 3.5e | 3.6e | 3.6e | 3.4e |
| | 230 | 610 | 3.8e | 3.8e | 3.5e | 3.6e | 3.6e | 3.4e | 3.4e | 3.4e | 3.3e | 3.2e | 3.2e | 3.1e | 3.1e | 3.1e | 3.0e | 2.9e | 2.9e | 2.9e |
| **600S300-54** | 345 | 305 | 6.4 | 5.6 | 4.7 | 6.2 | 5.4 | 4.5 | 5.9 | 5.2 | 4.4 | 5.7 | 5.0 | 4.2 | 5.5 | 4.8 | 4.1 | 5.4 | 4.7 | 4.0 |
| | 345 | 406 | 5.8 | 5.1 | 4.3 | 5.6 | 4.9 | 4.1 | 5.4 | 4.7 | 4.0 | 5.2 | 4.5 | 3.8 | 5.0 | 4.4 | 3.7 | 4.8 | 4.3 | 3.6 |
| | 345 | 610 | 5.1 | 4.5 | 3.8 | 4.8 | 4.3 | 3.6 | 4.5 | 4.1 | 3.5 | 4.3 | 4.0 | 3.3 | 4.1 | 3.8 | 3.2 | 3.9 | 3.7 | 3.1 |
| **600S300-68** | 345 | 305 | 7.0 | 6.1 | 5.2 | 6.7 | 5.8 | 4.9 | 6.4 | 5.6 | 4.7 | 6.2 | 5.4 | 4.6 | 6.0 | 5.3 | 4.4 | 5.8 | 5.1 | 4.3 |
| | 345 | 406 | 6.4 | 5.6 | 4.7 | 6.1 | 5.3 | 4.5 | 5.8 | 5.1 | 4.3 | 5.6 | 4.9 | 4.2 | 5.5 | 4.8 | 4.0 | 5.3 | 4.6 | 3.9 |
| | 345 | 610 | 5.6 | 4.8 | 4.1 | 5.3 | 4.6 | 3.9 | 5.1 | 4.5 | 3.8 | 4.9 | 4.3 | 3.6 | 4.7 | 4.2 | 3.5 | 4.5 | 4.1 | 3.4 |
| **600S300-97** | 345 | 305 | 7.9 | 6.9 | 5.8 | 7.5 | 6.6 | 5.6 | 7.3 | 6.3 | 5.3 | 7.0 | 6.1 | 5.2 | 6.8 | 5.9 | 5.0 | 6.6 | 5.8 | 4.9 |
| | 345 | 406 | 7.2 | 6.3 | 5.3 | 6.9 | 6.0 | 5.0 | 6.6 | 5.8 | 4.9 | 6.4 | 5.6 | 4.7 | 6.2 | 5.4 | 4.5 | 6.0 | 5.2 | 4.4 |
| | 345 | 610 | 6.3 | 5.5 | 4.6 | 6.0 | 5.2 | 4.4 | 5.8 | 5.0 | 4.2 | 5.6 | 4.9 | 4.1 | 5.4 | 4.7 | 4.0 | 5.2 | 4.6 | 3.9 |

**NOTES:**

1) $p = I_w \{qC_eC_gC_p\}$; $I_w$ of 0.75 has been incorpotated in the deflection values of the table.
The parameters in the bracket { } must be determined by the design professional in accordance with the NBCC.

2) "e" web stiffeners required at ends.

Bailey Metal Products, Dass Metal Products, DCM Metal Corp., EB Métal Inc., Imperial Building Products, Manugypse, Groupe UP, Trebor Building Products Ltd.

## SINGLE SPAN CURTAIN WALL LIMITING HEIGHTS (m)

| Stud Designation | Specified Loads $F_y$ (MPa) | Spacing (mm) | 1.75 kPa | | | 2.00 kPa | | | 2.25 kPa | | | 2.50 kPa | | | 2.75 kPa | | | 3.00 kPa | | |
|---|---|---|---|---|---|---|---|---|---|---|---|---|---|---|---|---|---|---|---|---|
| | | | L/240 | L/360 | L/600 | L/240 | L/360 | L/600 | L/240 | L/360 | L/600 | L/240 | L/360 | L/600 | L/240 | L/360 | L/600 | L/240 | L/360 | L/600 |
| **800S162-43** | 230 | 305 | 5.7e | 5.7e | 4.9e | 5.3e | 5.3e | 4.7e | 5.0e | 5.0e | 4.6e | 4.7e | 4.7e | 4.4e | 4.5e | 4.5e | 4.3e | 4.3e | 4.3e | 4.1e |
| | 230 | 406 | 4.9e | 4.9e | 4.5e | 4.6e | 4.6e | 4.3e | 4.3e | 4.3e | 4.1e | 4.1e | 4.1e | 4.0e | 3.9e | 3.9e | 3.9e | 3.7e | 3.7e | 3.7e |
| | 230 | 610 | 4.0e | 4.0e | 3.9e | 3.7e | 3.7e | 3.7e | 3.5e | 3.5e | 3.5e | 3.3e | 3.3e | 3.3e | 3.2e | 3.2e | 3.2e | 3.1e | 3.1e | 3.1e |
| **800S162-54** | 345 | 305 | 7.2 | 6.3 | 5.3 | 6.9 | 6.0 | 5.1 | 6.6 | 5.8 | 4.9 | 6.3 | 5.6 | 4.7 | 6.0 | 5.4 | 4.6 | 5.8e | 5.3 | 4.4 |
| | 345 | 406 | 6.5 | 5.7 | 4.8 | 6.1 | 5.5 | 4.6 | 5.8e | 5.3 | 4.4 | 5.5e | 5.1e | 4.3 | 5.2e | 4.9e | 4.2 | 5.0e | 4.8e | 4.0 |
| | 345 | 610 | 5.3e | 5.0e | 4.2 | 5.0e | 4.8e | 4.0 | 4.7e | 4.6e | 3.9e | 4.5e | 4.4e | 3.7e | 4.3e | 4.3e | 3.6e | 4.1e | 4.1e | 3.5e |
| **800S162-68** | 345 | 305 | 7.8 | 6.8 | 5.8 | 7.5 | 6.5 | 5.5 | 7.2 | 6.3 | 5.3 | 6.9 | 6.1 | 5.1 | 6.7 | 5.9 | 5.0 | 6.5 | 5.7 | 4.8 |
| | 345 | 406 | 7.1 | 6.2 | 5.2 | 6.8 | 5.9 | 5.0 | 6.5 | 5.7 | 4.8 | 6.3 | 5.5 | 4.6 | 6.1 | 5.3 | 4.5 | 5.8 | 5.2 | 4.4 |
| | 345 | 610 | 6.2 | 5.4 | 4.6 | 5.8 | 5.2 | 4.4 | 5.5 | 5.0 | 4.2 | 5.2e | 4.8 | 4.1 | 5.0e | 4.7 | 3.9 | 4.8e | 4.5e | 3.8 |
| **800S162-97** | 345 | 305 | 8.7 | 7.6 | 6.4 | 8.3 | 7.3 | 6.1 | 8.0 | 7.0 | 5.9 | 7.7 | 6.7 | 5.7 | 7.5 | 6.5 | 5.5 | 7.3 | 6.3 | 5.4 |
| | 345 | 406 | 7.9 | 6.9 | 5.8 | 7.6 | 6.6 | 5.6 | 7.3 | 6.3 | 5.4 | 7.0 | 6.1 | 5.2 | 6.8 | 5.9 | 5.0 | 6.6 | 5.8 | 4.9 |
| | 345 | 610 | 6.9 | 6.0 | 5.1 | 6.6 | 5.8 | 4.9 | 6.3 | 5.5 | 4.7 | 6.1 | 5.4 | 4.5 | 5.9 | 5.2 | 4.4 | 5.8 | 5.0 | 4.2 |
| **800S200-43** | 230 | 305 | 6.1e | 6.1e | 5.2e | 5.7e | 5.7e | 5.0e | 5.4e | 5.4e | 4.8e | 5.1e | 5.1e | 4.6e | 4.9e | 4.9e | 4.5e | 4.6e | 4.6e | 4.4e |
| | 230 | 406 | 5.3e | 5.3e | 4.8e | 4.9e | 4.9e | 4.5e | 4.6e | 4.6e | 4.4e | 4.4e | 4.4e | 4.2e | 4.2e | 4.2e | 4.1e | 4.0e | 4.0e | 4.0e |
| | 230 | 610 | 4.3e | 4.3e | 4.2e | 4.0e | 4.0e | 4.0e | 3.8e | 3.8e | 3.8e | 3.6e | 3.6e | 3.6e | 3.4e | 3.4e | 3.4e | 3.3e | 3.3e | 3.3e |
| **800S200-54** | 345 | 305 | 7.6 | 6.7 | 5.6 | 7.3 | 6.4 | 5.4 | 7.0 | 6.1 | 5.2 | 6.8e | 5.9 | 5.0 | 6.5e | 5.7 | 4.8 | 6.2e | 5.6 | 4.7 |
| | 345 | 406 | 6.9 | 6.1 | 5.1 | 6.6e | 5.8 | 4.9 | 6.2e | 5.6 | 4.7 | 5.9e | 5.4e | 4.5 | 5.6e | 5.2e | 4.4 | 5.4e | 5.1e | 4.3e |
| | 345 | 610 | 5.7e | 5.3e | 4.5 | 5.4e | 5.1e | 4.3e | 5.0e | 4.9e | 4.1e | 4.8e | 4.7e | 4.0e | 4.6e | 4.6e | 3.8e | 4.4e | 4.4e | 3.7e |
| **800S200-68** | 345 | 305 | 8.2 | 7.2 | 6.0 | 7.8 | 6.8 | 5.8 | 7.5 | 6.6 | 5.6 | 7.3 | 6.4 | 5.4 | 7.0 | 6.2 | 5.2 | 6.8 | 6.0 | 5.0 |
| | 345 | 406 | 7.4 | 6.5 | 5.5 | 7.1 | 6.2 | 5.2 | 6.8 | 6.0 | 5.0 | 6.6 | 5.8 | 4.9 | 6.4 | 5.6 | 4.7 | 6.2 | 5.4 | 4.6 |
| | 345 | 610 | 6.5 | 5.7 | 4.8 | 6.2 | 5.4 | 4.6 | 5.9e | 5.2 | 4.4 | 5.6e | 5.0 | 4.3 | 5.3e | 4.9e | 4.1 | 5.1e | 4.7e | 4.0 |
| **800S200-97** | 345 | 305 | 9.1 | 8.0 | 6.7 | 8.7 | 7.6 | 6.4 | 8.4 | 7.3 | 6.2 | 8.1 | 7.1 | 6.0 | 7.8 | 6.8 | 5.8 | 7.6 | 6.7 | 5.6 |
| | 345 | 406 | 8.3 | 7.2 | 6.1 | 7.9 | 6.9 | 5.8 | 7.6 | 6.7 | 5.6 | 7.4 | 6.4 | 5.4 | 7.1 | 6.2 | 5.2 | 6.9 | 6.0 | 5.1 |
| | 345 | 610 | 7.2 | 6.3 | 5.3 | 6.9 | 6.0 | 5.1 | 6.7 | 5.8 | 4.9 | 6.4 | 5.6 | 4.7 | 6.2 | 5.4 | 4.6 | 6.0 | 5.3 | 4.5 |
| **800S250-43** | 230 | 305 | 6.2e | 6.2e | 5.4e | 5.8e | 5.8e | 5.2e | 5.5e | 5.5e | 5.0e | 5.2e | 5.2e | 4.8e | 5.0e | 5.0e | 4.7e | 4.8e | 4.8e | 4.6e |
| | 230 | 406 | 5.4e | 5.4e | 4.9e | 5.0e | 5.0e | 4.7e | 4.8e | 4.8e | 4.6e | 4.5e | 4.5e | 4.4e | 4.3e | 4.3e | 4.3e | 4.1e | 4.1e | 4.1e |
| | 230 | 610 | 4.4e | 4.4e | 4.3e | 4.1e | 4.1e | 4.1e | 3.9e | 3.9e | 3.9e | 3.7e | 3.7e | 3.7e | 3.5e | 3.5e | 3.5e | 3.4e | 3.4e | 3.4e |
| **800S250-54** | 345 | 305 | 7.9 | 6.9 | 5.8 | 7.5 | 6.6 | 5.5 | 7.2e | 6.3 | 5.3 | 6.9e | 6.1 | 5.1 | 6.6e | 5.9e | 5.0 | 6.3e | 5.7e | 4.8 |
| | 345 | 406 | 7.1e | 6.2 | 5.3 | 6.7e | 6.0e | 5.0 | 6.3e | 5.7e | 4.8 | 6.0e | 5.5e | 4.7 | 5.7e | 5.4e | 4.5e | 5.5e | 5.2e | 4.4e |
| | 345 | 610 | 5.9e | 5.4e | 4.6e | 5.5e | 5.2e | 4.4e | 5.2e | 5.0e | 4.2e | 4.9e | 4.8e | 4.1e | 4.7e | 4.7e | 4.0e | 4.5e | 4.5e | 3.8e |
| **800S250-68** | 345 | 305 | 8.5 | 7.4 | 6.3 | 8.1 | 7.1 | 6.0 | 7.8 | 6.8 | 5.8 | 7.6 | 6.6 | 5.6 | 7.3 | 6.4 | 5.4 | 7.1 | 6.2 | 5.2 |
| | 345 | 406 | 7.7 | 6.8 | 5.7 | 7.4 | 6.5 | 5.5 | 7.1 | 6.2 | 5.2 | 6.9 | 6.0 | 5.1 | 6.7e | 5.8 | 4.9 | 6.4e | 5.6 | 4.8 |
| | 345 | 610 | 6.8 | 5.9 | 5.0 | 6.4e | 5.6 | 4.8 | 6.0e | 5.4e | 4.6 | 5.7e | 5.2e | 4.4 | 5.5e | 5.1e | 4.3 | 5.2e | 4.9e | 4.2e |
| **800S250-97** | 345 | 305 | 9.5 | 8.3 | 7.0 | 9.1 | 8.0 | 6.7 | 8.8 | 7.7 | 6.5 | 8.5 | 7.4 | 6.2 | 8.2 | 7.2 | 6.0 | 8.0 | 7.0 | 5.9 |
| | 345 | 406 | 8.7 | 7.6 | 6.4 | 8.3 | 7.2 | 6.1 | 8.0 | 7.0 | 5.9 | 7.7 | 6.7 | 5.7 | 7.4 | 6.5 | 5.5 | 7.2 | 6.3 | 5.3 |
| | 345 | 610 | 7.6 | 6.6 | 5.6 | 7.2 | 6.3 | 5.3 | 7.0 | 6.1 | 5.1 | 6.7 | 5.9 | 4.9 | 6.5 | 5.7 | 4.8 | 6.3 | 5.5 | 4.7 |
| **800S300-43** | 230 | 305 | 6.3e | 6.3e | 5.6e | 5.9e | 5.9e | 5.3e | 5.6e | 5.6e | 5.1e | 5.3e | 5.3e | 4.9e | 5.0e | 5.0e | 4.8e | 4.8e | 4.8e | 4.7e |
| | 230 | 406 | 5.5e | 5.5e | 5.1e | 5.1e | 5.1e | 4.8e | 4.8e | 4.8e | 4.7e | 4.6e | 4.6e | 4.5e | 4.4e | 4.4e | 4.4e | 4.2e | 4.2e | 4.2e |
| | 230 | 610 | 4.5e | 4.5e | 4.4e | 4.2e | 4.2e | 4.2e | 3.9e | 3.9e | 3.9e | 3.7e | 3.7e | 3.7e | 3.6e | 3.6e | 3.6e | 3.4e | 3.4e | 3.4e |
| **800S300-54** | 345 | 305 | 8.0 | 7.0 | 5.9 | 7.7 | 6.7 | 5.7 | 7.4e | 6.5 | 5.4 | 7.0e | 6.2 | 5.3 | 6.7e | 6.0e | 5.1 | 6.4e | 5.9e | 4.9 |
| | 345 | 406 | 7.3e | 6.4 | 5.4 | 6.8e | 6.1e | 5.1 | 6.4e | 5.9e | 4.9 | 6.1e | 5.7e | 4.8e | 5.8e | 5.5e | 4.6e | 5.6e | 5.3e | 4.5e |
| | 345 | 610 | 5.9e | 5.6e | 4.7e | 5.6e | 5.3e | 4.5e | 5.2e | 5.1e | 4.3e | 5.0e | 4.9e | 4.2e | 4.7e | 4.7e | 4.0e | 4.5e | 4.5e | 3.9e |
| **800S300-68** | 345 | 305 | 8.7 | 7.6 | 6.4 | 8.3 | 7.3 | 6.2 | 8.0 | 7.0 | 5.9 | 7.8 | 6.8 | 5.7 | 7.5 | 6.6 | 5.5 | 7.3 | 6.4 | 5.4 |
| | 345 | 406 | 7.9 | 6.9 | 5.8 | 7.6 | 6.6 | 5.6 | 7.3 | 6.4 | 5.4 | 7.0 | 6.2 | 5.2 | 6.8e | 6.0 | 5.0 | 6.5e | 5.8 | 4.9 |
| | 345 | 610 | 6.9e | 6.1 | 5.1 | 6.5e | 5.8 | 4.9 | 6.1e | 5.6e | 4.7 | 5.8e | 5.4e | 4.5 | 5.6e | 5.2e | 4.4e | 5.3e | 5.1e | 4.3e |
| **800S300-97** | 345 | 305 | 9.8 | 8.6 | 7.3 | 9.4 | 8.2 | 6.9 | 9.1 | 7.9 | 6.7 | 8.7 | 7.6 | 6.4 | 8.5 | 7.4 | 6.2 | 8.2 | 7.2 | 6.1 |
| | 345 | 406 | 8.9 | 7.8 | 6.6 | 8.6 | 7.5 | 6.3 | 8.2 | 7.2 | 6.1 | 7.9 | 6.9 | 5.9 | 7.7 | 6.7 | 5.7 | 7.5 | 6.5 | 5.5 |
| | 345 | 610 | 7.8 | 6.8 | 5.8 | 7.5 | 6.5 | 5.5 | 7.2 | 6.3 | 5.3 | 6.9 | 6.1 | 5.1 | 6.7 | 5.9 | 5.0 | 6.5 | 5.7 | 4.8 |

**NOTES:**

1) $p = I_w \{qC_eC_gC_p\}$; $I_w$ of 0.75 has been incorpotated in the deflection values of the table.
The parameters in the bracket { } must be determined by the design professional in accordance with the NBCC.

2) "e" web stiffeners required at ends.

Bailey Metal Products, Dass Metal Products, DCM Metal Corp., EB Métal Inc., Imperial Building Products, Manugypse, Groupe UP, Trebor Building Products Ltd.

## DOUBLE SPAN CURTAIN WALL LIMITING HEIGHTS (m)

| Stud Designation | Specified Loads $F_y$ (MPa) | Spacing (mm) | 0.25 kPa | | | 0.50 kPa | | | 0.75 kPa | | | 1.00 kPa | | | 1.25 kPa | | | 1.50 kPa | | |
|---|---|---|---|---|---|---|---|---|---|---|---|---|---|---|---|---|---|---|---|---|
| | | | L/120 | L/240 | L/360 | L/240 | L/360 | L/600 | L/240 | L/360 | L/600 | L/240 | L/360 | L/600 | L/240 | L/360 | L/600 | L/240 | L/360 | L/600 |
| **362S125-33** | 230 | 305 | 6.4 | 6.4 | 6.4 | 4.5 | 4.5 | 4.5 | 3.7 | 3.7 | 3.7 | 3.2 | 3.2 | 3.2 | 2.9 | 2.9 | 2.9 | 2.6 | 2.6 | 2.6 |
| | 230 | 406 | 5.6 | 5.6 | 5.6 | 3.9 | 3.9 | 3.9 | 3.2 | 3.2 | 3.2 | 2.8 | 2.8 | 2.8 | 2.5 | 2.5 | 2.5 | 2.3 | 2.3 | 2.3 |
| | 230 | 610 | 4.5 | 4.5 | 4.5 | 3.2 | 3.2 | 3.2 | 2.6 | 2.6 | 2.6 | 2.3 | 2.3 | 2.3 | 2.0i | 2.0i | 2.0i | 1.8i | 1.8i | 1.8i |
| **362S125-43** | 230 | 305 | 7.7 | 7.7 | 7.4 | 5.5 | 5.5 | 4.9 | 4.5 | 4.5 | 4.3 | 3.9 | 3.9 | 3.9 | 3.5 | 3.5 | 3.5 | 3.2 | 3.2 | 3.2 |
| | 230 | 406 | 6.7 | 6.7 | 6.7 | 4.7 | 4.7 | 4.5 | 3.9 | 3.9 | 3.9 | 3.3 | 3.3 | 3.3 | 3.0 | 3.0 | 3.0 | 2.7 | 2.7 | 2.7 |
| | 230 | 610 | 5.5 | 5.5 | 5.5 | 3.9 | 3.9 | 3.9 | 3.2 | 3.2 | 3.2 | 2.7 | 2.7 | 2.7 | 2.4 | 2.4 | 2.4 | 2.2 | 2.2 | 2.2 |
| **362S125-54** | 345 | 305 | 10.3 | 9.0 | 7.9 | 7.2 | 6.3 | 5.3 | 5.9 | 5.5 | 4.6 | 5.1 | 5.0 | 4.2 | 4.6 | 4.6 | 3.9 | 4.2 | 4.2 | 3.7 |
| | 345 | 406 | 8.9 | 8.2 | 7.2 | 6.3 | 5.7 | 4.8 | 5.1 | 5.0 | 4.2 | 4.5 | 4.5 | 3.8 | 4.0 | 4.0 | 3.5 | 3.6 | 3.6 | 3.3 |
| | 345 | 610 | 7.3 | 7.2 | 6.3 | 5.1 | 5.0 | 4.2 | 4.2 | 4.2 | 3.7 | 3.6 | 3.6 | 3.3 | 3.3 | 3.3 | 3.1 | 3.0 | 3.0 | 2.9 |
| **362S162-33** | 230 | 305 | 8.1 | 8.1 | 7.5 | 5.7 | 5.7 | 5.0 | 4.6 | 4.6 | 4.4 | 4.0 | 4.0 | 4.0 | 3.5 | 3.5 | 3.5 | 3.2i | 3.2i | 3.2i |
| | 230 | 406 | 7.0 | 7.0 | 6.8 | 4.9 | 4.9 | 4.5 | 4.0 | 4.0 | 4.0 | 3.4 | 3.4 | 3.4 | 3.0i | 3.0i | 3.0i | 2.7i | 2.7i | 2.7i |
| | 230 | 610 | 5.7 | 5.7 | 5.7 | 4.0 | 4.0 | 4.0 | 3.2i | 3.2i | 3.2i | 2.7i | 2.7i | 2.7i | 2.4i | 2.4i | 2.4i | 2.1i | 2.1i | 2.1i |
| **362S162-43** | 230 | 305 | 9.6 | 9.3 | 8.1 | 6.7 | 6.4 | 5.4 | 5.5 | 5.5 | 4.7 | 4.7 | 4.7 | 4.3 | 4.2 | 4.2 | 4.0 | 3.8 | 3.8 | 3.8 |
| | 230 | 406 | 8.3 | 8.3 | 7.4 | 5.8 | 5.8 | 4.9 | 4.7 | 4.7 | 4.3 | 4.0 | 4.0 | 3.9 | 3.6 | 3.6 | 3.6 | 3.2 | 3.2 | 3.2 |
| | 230 | 610 | 6.7 | 6.7 | 6.4 | 4.7 | 4.7 | 4.3 | 3.8 | 3.8 | 3.8 | 3.2 | 3.2 | 3.2 | 2.9 | 2.9 | 2.9 | 2.6 | 2.6 | 2.6 |
| **362S162-54** | 345 | 305 | 12.5 | 9.9 | 8.7 | 7.9 | 6.9 | 5.8 | 6.9 | 6.0 | 5.1 | 6.3 | 5.5 | 4.6 | 5.7 | 5.1 | 4.3 | 5.1 | 4.8 | 4.0 |
| | 345 | 406 | 11.1 | 9.0 | 7.9 | 7.2 | 6.3 | 5.3 | 6.3 | 5.5 | 4.6 | 5.5 | 5.0 | 4.2 | 4.9 | 4.6 | 3.9 | 4.4 | 4.3 | 3.7 |
| | 345 | 610 | 9.0 | 7.9 | 6.9 | 6.3 | 5.5 | 4.6 | 5.1 | 4.8 | 4.0 | 4.4 | 4.3 | 3.7 | 3.9 | 3.9 | 3.4 | 3.5 | 3.5 | 3.2 |
| **362S162-68** | 345 | 305 | 13.4 | 10.6 | 9.3 | 8.4 | 7.4 | 6.2 | 7.4 | 6.4 | 5.4 | 6.7 | 5.9 | 4.9 | 6.2 | 5.4 | 4.6 | 5.8 | 5.1 | 4.3 |
| | 345 | 406 | 12.2 | 9.7 | 8.4 | 7.7 | 6.7 | 5.7 | 6.7 | 5.9 | 4.9 | 6.1 | 5.3 | 4.5 | 5.5 | 4.9 | 4.2 | 4.9 | 4.6 | 3.9 |
| | 345 | 610 | 10.3 | 8.4 | 7.4 | 6.7 | 5.9 | 4.9 | 5.8 | 5.1 | 4.3 | 4.9 | 4.6 | 3.9 | 4.3 | 4.3 | 3.6 | 3.9 | 3.9 | 3.4 |
| **362S162-97** | 345 | 305 | 14.8 | 11.7 | 10.3 | 9.3 | 8.1 | 6.9 | 8.1 | 7.1 | 6.0 | 7.4 | 6.5 | 5.4 | 6.9 | 6.0 | 5.1 | 6.5 | 5.6 | 4.8 |
| | 345 | 406 | 13.4 | 10.7 | 9.3 | 8.5 | 7.4 | 6.2 | 7.4 | 6.5 | 5.4 | 6.7 | 5.9 | 4.9 | 6.2 | 5.4 | 4.6 | 5.8 | 5.1 | 4.3 |
| | 345 | 610 | 11.7 | 9.3 | 8.1 | 7.4 | 6.5 | 5.4 | 6.5 | 5.6 | 4.8 | 5.8 | 5.1 | 4.3 | 5.1 | 4.8 | 4.0 | 4.5 | 4.5 | 3.8 |
| **362S200-33** | 230 | 305 | 8.5 | 8.5 | 7.8 | 6.0 | 6.0 | 5.2 | 4.8 | 4.8 | 4.6 | 4.1 | 4.1 | 4.1 | 3.7 | 3.7 | 3.7 | 3.3i | 3.3i | 3.3i |
| | 230 | 406 | 7.4 | 7.4 | 7.1 | 5.1 | 5.1 | 4.8 | 4.1 | 4.1 | 4.1 | 3.5i | 3.5i | 3.5i | 3.1i | 3.1i | 3.1i | 2.8i | 2.8i | 2.8i |
| | 230 | 610 | 6.0 | 6.0 | 6.0 | 4.1 | 4.1 | 4.1 | 3.3i | 3.3i | 3.3i | 2.8i | 2.8i | 2.8i | 2.5i | 2.5i | 2.5i | 2.2i | 2.2i | 2.2i |
| **362S200-43** | 230 | 305 | 10.3 | 9.8 | 8.6 | 7.2 | 6.8 | 5.7 | 5.8 | 5.8 | 5.0 | 5.0 | 5.0 | 4.5 | 4.4 | 4.4 | 4.2 | 4.0 | 4.0 | 4.0 |
| | 230 | 406 | 8.9 | 8.9 | 7.8 | 6.2 | 6.2 | 5.2 | 5.0 | 5.0 | 4.5 | 4.3 | 4.3 | 4.1 | 3.8 | 3.8 | 3.8 | 3.4 | 3.4 | 3.4 |
| | 230 | 610 | 7.2 | 7.2 | 6.8 | 5.0 | 5.0 | 4.5 | 4.0 | 4.0 | 4.0 | 3.4 | 3.4 | 3.4 | 3.0 | 3.0 | 3.0 | 2.7i | 2.7i | 2.7i |
| **362S200-54** | 345 | 305 | 13.2 | 10.5 | 9.2 | 8.3 | 7.3 | 6.1 | 7.3 | 6.4 | 5.4 | 6.6 | 5.8 | 4.9 | 5.9 | 5.4 | 4.5 | 5.4 | 5.1 | 4.3 |
| | 345 | 406 | 11.7 | 9.5 | 8.3 | 7.6 | 6.6 | 5.6 | 6.6 | 5.8 | 4.9 | 5.7 | 5.3 | 4.4 | 5.1 | 4.9 | 4.1 | 4.6 | 4.6 | 3.9 |
| | 345 | 610 | 9.5 | 8.3 | 7.3 | 6.6 | 5.8 | 4.9 | 5.4 | 5.1 | 4.3 | 4.6 | 4.6 | 3.9 | 4.1 | 4.1 | 3.6 | 3.7 | 3.7 | 3.4 |
| **362S200-68** | 345 | 305 | 14.2 | 11.3 | 9.8 | 8.9 | 7.8 | 6.6 | 7.8 | 6.8 | 5.7 | 7.1 | 6.2 | 5.2 | 6.6 | 5.7 | 4.8 | 6.2 | 5.4 | 4.6 |
| | 345 | 406 | 12.9 | 10.2 | 8.9 | 8.1 | 7.1 | 6.0 | 7.1 | 6.2 | 5.2 | 6.4 | 5.6 | 4.7 | 5.8 | 5.2 | 4.4 | 5.3 | 4.9 | 4.1 |
| | 345 | 610 | 11.1 | 8.9 | 7.8 | 7.1 | 6.2 | 5.2 | 6.2 | 5.4 | 4.6 | 5.3 | 4.9 | 4.1 | 4.6 | 4.6 | 3.8 | 4.1 | 4.1 | 3.6 |
| **362S200-97** | 345 | 305 | 15.7 | 12.4 | 10.9 | 9.9 | 8.6 | 7.3 | 8.6 | 7.5 | 6.4 | 7.8 | 6.8 | 5.8 | 7.3 | 6.4 | 5.4 | 6.8 | 6.0 | 5.0 |
| | 345 | 406 | 14.2 | 11.3 | 9.9 | 9.0 | 7.8 | 6.6 | 7.8 | 6.8 | 5.8 | 7.1 | 6.2 | 5.2 | 6.6 | 5.8 | 4.9 | 6.2 | 5.4 | 4.6 |
| | 345 | 610 | 12.4 | 9.9 | 8.6 | 7.8 | 6.8 | 5.8 | 6.8 | 6.0 | 5.0 | 6.2 | 5.4 | 4.6 | 5.3 | 5.0 | 4.3 | 4.7 | 4.7 | 4.0 |
| **362S250-33** | 230 | 305 | 8.8 | 8.8 | 8.1 | 6.2 | 6.2 | 5.4 | 5.0 | 5.0 | 4.8 | 4.3 | 4.3 | 4.3 | 3.8i | 3.8i | 3.8i | 3.4i | 3.4i | 3.4i |
| | 230 | 406 | 7.6 | 7.6 | 7.4 | 5.3 | 5.3 | 4.9 | 4.3 | 4.3 | 4.3 | 3.7i | 3.7i | 3.7i | 3.2i | 3.2i | 3.2i | 2.9i | 2.9i | 2.9i |
| | 230 | 610 | 6.2 | 6.2 | 6.2 | 4.3 | 4.3 | 4.3 | 3.4i | 3.4i | 3.4i | 2.9i | 2.9i | 2.9i | 2.5i | 2.5i | 2.5i | 2.3i | 2.3i | 2.3i |
| **362S250-43** | 230 | 305 | 10.5 | 10.3 | 9.0 | 7.4 | 7.1 | 6.0 | 6.0 | 6.0 | 5.3 | 5.1 | 5.1 | 4.8 | 4.6 | 4.6 | 4.4 | 4.1 | 4.1 | 4.1 |
| | 230 | 406 | 9.1 | 9.1 | 8.2 | 6.4 | 6.4 | 5.5 | 5.1 | 5.1 | 4.8 | 4.4 | 4.4 | 4.3 | 3.9 | 3.9 | 3.9 | 3.5 | 3.5 | 3.5 |
| | 230 | 610 | 7.4 | 7.4 | 7.1 | 5.1 | 5.1 | 4.8 | 4.1 | 4.1 | 4.1 | 3.5 | 3.5 | 3.5 | 3.1 | 3.1 | 3.1 | 2.8i | 2.8i | 2.8i |
| **362S250-54** | 345 | 305 | 13.8 | 10.9 | 9.6 | 8.7 | 7.6 | 6.4 | 7.6 | 6.6 | 5.6 | 6.8 | 6.0 | 5.1 | 6.1 | 5.6 | 4.7 | 5.5 | 5.3 | 4.4 |
| | 345 | 406 | 12.0 | 9.9 | 8.7 | 7.9 | 6.9 | 5.8 | 6.8 | 6.0 | 5.1 | 5.9 | 5.5 | 4.6 | 5.2 | 5.1 | 4.3 | 4.7 | 4.7 | 4.0 |
| | 345 | 610 | 9.8 | 8.7 | 7.6 | 6.8 | 6.0 | 5.1 | 5.5 | 5.3 | 4.4 | 4.7 | 4.7 | 4.0 | 4.1 | 4.1 | 3.7 | 3.7 | 3.7 | 3.5 |
| **362S250-68** | 345 | 305 | 14.9 | 11.8 | 10.3 | 9.4 | 8.2 | 6.9 | 8.2 | 7.2 | 6.0 | 7.5 | 6.5 | 5.5 | 6.9 | 6.0 | 5.1 | 6.3 | 5.7 | 4.8 |
| | 345 | 406 | 13.6 | 10.8 | 9.4 | 8.5 | 7.5 | 6.3 | 7.5 | 6.5 | 5.5 | 6.7 | 5.9 | 5.0 | 5.9 | 5.5 | 4.6 | 5.3 | 5.2 | 4.4 |
| | 345 | 610 | 11.3 | 9.4 | 8.2 | 7.5 | 6.5 | 5.5 | 6.3 | 5.7 | 4.8 | 5.3 | 5.2 | 4.4 | 4.7 | 4.7 | 4.1 | 4.2 | 4.2 | 3.8 |
| **362S250-97** | 345 | 305 | 16.6 | 13.2 | 11.5 | 10.5 | 9.1 | 7.7 | 9.1 | 8.0 | 6.7 | 8.3 | 7.2 | 6.1 | 7.7 | 6.7 | 5.7 | 7.2 | 6.3 | 5.3 |
| | 345 | 406 | 15.1 | 12.0 | 10.5 | 9.5 | 8.3 | 7.0 | 8.3 | 7.2 | 6.1 | 7.5 | 6.6 | 5.6 | 7.0 | 6.1 | 5.2 | 6.4 | 5.8 | 4.9 |
| | 345 | 610 | 13.2 | 10.5 | 9.1 | 8.3 | 7.2 | 6.1 | 7.2 | 6.3 | 5.3 | 6.4 | 5.8 | 4.9 | 5.5 | 5.3 | 4.5 | 4.8 | 4.8 | 4.2 |
| **362S300-33** | 230 | 305 | 9.0 | 9.0 | 8.4 | 6.3 | 6.3 | 5.6 | 5.1 | 5.1 | 4.9 | 4.4 | 4.4 | 4.4 | 3.9i | 3.9i | 3.9i | 3.5i | 3.5i | 3.5i |
| | 230 | 406 | 7.8 | 7.8 | 7.6 | 5.4 | 5.4 | 5.1 | 4.4 | 4.4 | 4.4 | 3.7i | 3.7i | 3.7i | 3.3i | 3.3i | 3.3i | 3.0i | 3.0i | 3.0i |
| | 230 | 610 | 6.3 | 6.3 | 6.3 | 4.4 | 4.4 | 4.4 | 3.5i | 3.5i | 3.5i | 3.0i | 3.0i | 3.0i | 2.6i | 2.6i | 2.6i | 2.3i | 2.3i | 2.3i |
| **362S300-43** | 230 | 305 | 10.7 | 10.6 | 9.3 | 7.5 | 7.4 | 6.2 | 6.0 | 6.0 | 5.4 | 5.2 | 5.2 | 4.9 | 4.6 | 4.6 | 4.6 | 4.2 | 4.2 | 4.2 |
| | 230 | 406 | 9.2 | 9.2 | 8.4 | 6.4 | 6.4 | 5.6 | 5.2 | 5.2 | 4.9 | 4.4 | 4.4 | 4.4 | 3.9 | 3.9 | 3.9 | 3.5 | 3.5 | 3.5 |
| | 230 | 610 | 7.5 | 7.5 | 7.4 | 5.2 | 5.2 | 4.9 | 4.2 | 4.2 | 4.2 | 3.5 | 3.5 | 3.5 | 3.1 | 3.1 | 3.1 | 2.8i | 2.8i | 2.8i |
| **362S300-54** | 345 | 305 | 14.1 | 11.2 | 9.8 | 8.9 | 7.8 | 6.6 | 7.8 | 6.8 | 5.7 | 6.9 | 6.2 | 5.2 | 6.1 | 5.7 | 4.8 | 5.6 | 5.4 | 4.6 |
| | 345 | 406 | 12.2 | 10.2 | 8.9 | 8.1 | 7.1 | 6.0 | 6.9 | 6.2 | 5.2 | 5.9 | 5.6 | 4.7 | 5.3 | 5.2 | 4.4 | 4.8 | 4.8 | 4.1 |
| | 345 | 610 | 9.9 | 8.9 | 7.8 | 6.9 | 6.2 | 5.2 | 5.6 | 5.4 | 4.6 | 4.8 | 4.8 | 4.1 | 4.2 | 4.2 | 3.8 | 3.8 | 3.8 | 3.6 |
| **362S300-68** | 345 | 305 | 15.4 | 12.2 | 10.7 | 9.7 | 8.5 | 7.1 | 8.5 | 7.4 | 6.2 | 7.7 | 6.7 | 5.7 | 7.1 | 6.2 | 5.3 | 6.4 | 5.9 | 5.0 |
| | 345 | 406 | 14.0 | 11.1 | 9.7 | 8.8 | 7.7 | 6.5 | 7.7 | 6.7 | 5.7 | 6.8 | 6.1 | 5.2 | 6.0 | 5.7 | 4.8 | 5.4 | 5.3 | 4.5 |
| | 345 | 610 | 11.5 | 9.7 | 8.5 | 7.7 | 6.7 | 5.7 | 6.4 | 5.9 | 5.0 | 5.4 | 5.3 | 4.5 | 4.8 | 4.8 | 4.2 | 4.3 | 4.3 | 3.9 |
| **362S300-97** | 345 | 305 | 17.3 | 13.7 | 12.0 | 10.9 | 9.5 | 8.0 | 9.5 | 8.3 | 7.0 | 8.7 | 7.6 | 6.4 | 8.0 | 7.0 | 5.9 | 7.6 | 6.6 | 5.6 |
| | 345 | 406 | 15.7 | 12.5 | 10.9 | 9.9 | 8.7 | 7.3 | 8.7 | 7.6 | 6.4 | 7.9 | 6.9 | 5.8 | 7.1 | 6.4 | 5.4 | 6.3 | 6.0 | 5.1 |
| | 345 | 610 | 13.7 | 10.9 | 9.5 | 8.7 | 7.6 | 6.4 | 7.6 | 6.6 | 5.6 | 6.3 | 6.0 | 5.1 | 5.5 | 5.5 | 4.7 | 4.8 | 4.8 | 4.4 |

**NOTES:**

1) $p = I_w \{qC_eC_gC_p\}$; $I_w$ of 0.75 has been incorpotated in the deflection values of the table.
The parameters in the bracket { } must be determined by the design professional in accordance with the NBCC.

2) "e" web stiffeners required at ends; "i" web stiffeners required at interior support; "a" web stiffeners required at ends and interior supports.

Bailey Metal Products, Dass Metal Products, DCM Metal Corp., EB Métal Inc., Imperial Building Products, Manugypse, Groupe UP, Trebor Building Products Ltd.

## DOUBLE SPAN CURTAIN WALL LIMITING HEIGHTS (m)

| Stud Designation | Specified Loads $F_y$ (MPa) | Spacing (mm) | 0.25 kPa | | | 0.50 kPa | | | 0.75 kPa | | | 1.00 kPa | | | 1.25 kPa | | | 1.50 kPa | | |
|---|---|---|---|---|---|---|---|---|---|---|---|---|---|---|---|---|---|---|---|---|
| | | | L/120 | L/240 | L/360 | L/240 | L/360 | L/600 | L/240 | L/360 | L/600 | L/240 | L/360 | L/600 | L/240 | L/360 | L/600 | L/240 | L/360 | L/600 |
| **400S125-33** | 230 | 305 | 6.8 | 6.8 | 6.8 | 4.8 | 4.8 | 4.8 | 3.9 | 3.9 | 3.9 | 3.4 | 3.4 | 3.4 | 3.0 | 3.0 | 3.0 | 2.8 | 2.8 | 2.8 |
| | 230 | 406 | 5.9 | 5.9 | 5.9 | 4.2 | 4.2 | 4.2 | 3.4 | 3.4 | 3.4 | 3.0 | 3.0 | 3.0 | 2.6 | 2.6 | 2.6 | 2.4i | 2.4i | 2.4i |
| | 230 | 610 | 4.8 | 4.8 | 4.8 | 3.4 | 3.4 | 3.4 | 2.8 | 2.8 | 2.8 | 2.4i | 2.4i | 2.4i | 2.1i | 2.1i | 2.1i | 1.9i | 1.9i | 1.9i |
| **400S125-43** | 230 | 305 | 8.2 | 8.2 | 8.0 | 5.8 | 5.8 | 5.3 | 4.7 | 4.7 | 4.7 | 4.1 | 4.1 | 4.1 | 3.7 | 3.7 | 3.7 | 3.3 | 3.3 | 3.3 |
| | 230 | 406 | 7.1 | 7.1 | 7.1 | 5.0 | 5.0 | 4.9 | 4.1 | 4.1 | 4.1 | 3.6 | 3.6 | 3.6 | 3.2 | 3.2 | 3.2 | 2.9 | 2.9 | 2.9 |
| | 230 | 610 | 5.8 | 5.8 | 5.8 | 4.1 | 4.1 | 4.1 | 3.3 | 3.3 | 3.3 | 2.9 | 2.9 | 2.9 | 2.6 | 2.6 | 2.6 | 2.4 | 2.4 | 2.4 |
| **400S125-54** | 345 | 305 | 10.9 | 9.8 | 8.5 | 7.7 | 6.8 | 5.7 | 6.3 | 5.9 | 5.0 | 5.5 | 5.4 | 4.5 | 4.9 | 4.9 | 4.2 | 4.5 | 4.5 | 4.0 |
| | 345 | 406 | 9.5 | 8.9 | 7.8 | 6.7 | 6.2 | 5.2 | 5.5 | 5.4 | 4.5 | 4.7 | 4.7 | 4.1 | 4.2 | 4.2 | 3.8 | 3.9 | 3.9 | 3.6 |
| | 345 | 610 | 7.7 | 7.7 | 6.8 | 5.5 | 5.4 | 4.5 | 4.5 | 4.5 | 4.0 | 3.9 | 3.9 | 3.6 | 3.5 | 3.5 | 3.3 | 3.2 | 3.2 | 3.1 |
| **400S162-33** | 230 | 305 | 8.6 | 8.6 | 8.0 | 6.0 | 6.0 | 5.4 | 4.9 | 4.9 | 4.7 | 4.2 | 4.2 | 4.2 | 3.7i | 3.7i | 3.7i | 3.4i | 3.4i | 3.4i |
| | 230 | 406 | 7.4 | 7.4 | 7.3 | 5.2 | 5.2 | 4.9 | 4.2 | 4.2 | 4.2 | 3.6i | 3.6i | 3.6i | 3.2i | 3.2i | 3.2i | 2.9i | 2.9i | 2.9i |
| | 230 | 610 | 6.0 | 6.0 | 6.0 | 4.2 | 4.2 | 4.2 | 3.4i | 3.4i | 3.4i | 2.9i | 2.9i | 2.9i | 2.5i | 2.5i | 2.5i | 2.3i | 2.3i | 2.3i |
| **400S162-43** | 230 | 305 | 10.2 | 10.0 | 8.7 | 7.2 | 6.9 | 5.9 | 5.8 | 5.8 | 5.1 | 5.0 | 5.0 | 4.6 | 4.5 | 4.5 | 4.3 | 4.0 | 4.0 | 4.0 |
| | 230 | 406 | 8.8 | 8.8 | 7.9 | 6.2 | 6.2 | 5.3 | 5.0 | 5.0 | 4.6 | 4.3 | 4.3 | 4.2 | 3.8 | 3.8 | 3.8 | 3.5 | 3.5 | 3.5 |
| | 230 | 610 | 7.2 | 7.2 | 6.9 | 5.0 | 5.0 | 4.6 | 4.0 | 4.0 | 4.0 | 3.5 | 3.5 | 3.5 | 3.1 | 3.1 | 3.1 | 2.8i | 2.8i | 2.8i |
| **400S162-54** | 345 | 305 | 13.5 | 10.7 | 9.4 | 8.5 | 7.4 | 6.3 | 7.4 | 6.5 | 5.5 | 6.8 | 5.9 | 5.0 | 6.0 | 5.5 | 4.6 | 5.5 | 5.2 | 4.4 |
| | 345 | 406 | 11.7 | 9.8 | 8.5 | 7.7 | 6.8 | 5.7 | 6.8 | 5.9 | 5.0 | 5.8 | 5.4 | 4.5 | 5.2 | 5.0 | 4.2 | 4.7 | 4.7 | 4.0 |
| | 345 | 610 | 9.6 | 8.5 | 7.4 | 6.8 | 5.9 | 5.0 | 5.5 | 5.2 | 4.4 | 4.7 | 4.7 | 4.0 | 4.2 | 4.2 | 3.7 | 3.8 | 3.8 | 3.5 |
| **400S162-68** | 345 | 305 | 14.5 | 11.5 | 10.0 | 9.1 | 8.0 | 6.7 | 8.0 | 7.0 | 5.9 | 7.2 | 6.3 | 5.3 | 6.7 | 5.9 | 5.0 | 6.2 | 5.5 | 4.7 |
| | 345 | 406 | 13.2 | 10.4 | 9.1 | 8.3 | 7.2 | 6.1 | 7.2 | 6.3 | 5.3 | 6.6 | 5.7 | 4.8 | 5.9 | 5.3 | 4.5 | 5.4 | 5.0 | 4.2 |
| | 345 | 610 | 11.0 | 9.1 | 8.0 | 7.2 | 6.3 | 5.3 | 6.2 | 5.5 | 4.7 | 5.4 | 5.0 | 4.2 | 4.7 | 4.7 | 3.9 | 4.3 | 4.3 | 3.7 |
| **400S162-97** | 345 | 305 | 16.0 | 12.7 | 11.1 | 10.1 | 8.8 | 7.4 | 8.8 | 7.7 | 6.5 | 8.0 | 7.0 | 5.9 | 7.4 | 6.5 | 5.5 | 7.0 | 6.1 | 5.1 |
| | 345 | 406 | 14.5 | 11.5 | 10.1 | 9.1 | 8.0 | 6.7 | 8.0 | 7.0 | 5.9 | 7.3 | 6.3 | 5.4 | 6.7 | 5.9 | 5.0 | 6.3 | 5.5 | 4.7 |
| | 345 | 610 | 12.7 | 10.1 | 8.8 | 8.0 | 7.0 | 5.9 | 7.0 | 6.1 | 5.1 | 6.3 | 5.5 | 4.7 | 5.8 | 5.1 | 4.3 | 5.2 | 4.8 | 4.1 |
| **400S200-33** | 230 | 305 | 9.0 | 9.0 | 8.4 | 6.3 | 6.3 | 5.6 | 5.1 | 5.1 | 4.9 | 4.4 | 4.4 | 4.4 | 3.9i | 3.9i | 3.9i | 3.5i | 3.5i | 3.5i |
| | 230 | 406 | 7.8 | 7.8 | 7.7 | 5.4 | 5.4 | 5.1 | 4.4 | 4.4 | 4.4 | 3.8i | 3.8i | 3.8i | 3.3i | 3.3i | 3.3i | 3.0i | 3.0i | 3.0i |
| | 230 | 610 | 6.3 | 6.3 | 6.3 | 4.4 | 4.4 | 4.4 | 3.5i | 3.5i | 3.5i | 3.0i | 3.0i | 3.0i | 2.7i | 2.7i | 2.7i | 2.4i | 2.4i | 2.4i |
| **400S200-43** | 230 | 305 | 10.9 | 10.6 | 9.2 | 7.7 | 7.3 | 6.2 | 6.2 | 6.2 | 5.4 | 5.3 | 5.3 | 4.9 | 4.8 | 4.8 | 4.6 | 4.3 | 4.3 | 4.3 |
| | 230 | 406 | 9.4 | 9.4 | 8.4 | 6.6 | 6.6 | 5.6 | 5.3 | 5.3 | 4.9 | 4.6 | 4.6 | 4.5 | 4.1 | 4.1 | 4.1 | 3.7 | 3.7 | 3.7 |
| | 230 | 610 | 7.7 | 7.7 | 7.3 | 5.3 | 5.3 | 4.9 | 4.3 | 4.3 | 4.3 | 3.7 | 3.7 | 3.7 | 3.3i | 3.3i | 3.3i | 2.9i | 2.9i | 2.9i |
| **400S200-54** | 345 | 305 | 14.3 | 11.3 | 9.9 | 9.0 | 7.9 | 6.6 | 7.9 | 6.9 | 5.8 | 7.1 | 6.2 | 5.3 | 6.3 | 5.8 | 4.9 | 5.7 | 5.4 | 4.6 |
| | 345 | 406 | 12.4 | 10.3 | 9.0 | 8.2 | 7.1 | 6.0 | 7.1 | 6.2 | 5.3 | 6.1 | 5.7 | 4.8 | 5.4 | 5.3 | 4.4 | 4.9 | 4.9 | 4.2 |
| | 345 | 610 | 10.1 | 9.0 | 7.9 | 7.1 | 6.2 | 5.3 | 5.7 | 5.4 | 4.6 | 4.9 | 4.9 | 4.2 | 4.4 | 4.4 | 3.9 | 3.9 | 3.9 | 3.6 |
| **400S200-68** | 345 | 305 | 15.3 | 12.1 | 10.6 | 9.6 | 8.4 | 7.1 | 8.4 | 7.4 | 6.2 | 7.6 | 6.7 | 5.6 | 7.1 | 6.2 | 5.2 | 6.7 | 5.8 | 4.9 |
| | 345 | 406 | 13.9 | 11.0 | 9.6 | 8.8 | 7.6 | 6.5 | 7.6 | 6.7 | 5.6 | 6.9 | 6.1 | 5.1 | 6.3 | 5.6 | 4.8 | 5.7 | 5.3 | 4.5 |
| | 345 | 610 | 11.8 | 9.6 | 8.4 | 7.6 | 6.7 | 5.6 | 6.7 | 5.8 | 4.9 | 5.7 | 5.3 | 4.5 | 5.1 | 4.9 | 4.2 | 4.6 | 4.6 | 3.9 |
| **400S200-97** | 345 | 305 | 16.9 | 13.4 | 11.7 | 10.7 | 9.3 | 7.9 | 9.3 | 8.1 | 6.9 | 8.5 | 7.4 | 6.2 | 7.9 | 6.9 | 5.8 | 7.4 | 6.5 | 5.4 |
| | 345 | 406 | 15.4 | 12.2 | 10.7 | 9.7 | 8.5 | 7.1 | 8.5 | 7.4 | 6.2 | 7.7 | 6.7 | 5.7 | 7.1 | 6.2 | 5.3 | 6.7 | 5.9 | 5.0 |
| | 345 | 610 | 13.4 | 10.7 | 9.3 | 8.5 | 7.4 | 6.2 | 7.4 | 6.5 | 5.4 | 6.7 | 5.9 | 5.0 | 6.1 | 5.4 | 4.6 | 5.5 | 5.1 | 4.3 |
| **400S250-33** | 230 | 305 | 9.3 | 9.3 | 8.8 | 6.5 | 6.5 | 5.9 | 5.3 | 5.3 | 5.1 | 4.5 | 4.5 | 4.5 | 4.0i | 4.0i | 4.0i | 3.6i | 3.6i | 3.6i |
| | 230 | 406 | 8.1 | 8.1 | 8.0 | 5.6 | 5.6 | 5.3 | 4.5 | 4.5 | 4.5 | 3.9i | 3.9i | 3.9i | 3.4i | 3.4i | 3.4i | 3.1i | 3.1i | 3.1i |
| | 230 | 610 | 6.5 | 6.5 | 6.5 | 4.5 | 4.5 | 4.5 | 3.6i | 3.6i | 3.6i | 3.1i | 3.1i | 3.1i | 2.7i | 2.7i | 2.7i | 2.5i | 2.5i | 2.5i |
| **400S250-43** | 230 | 305 | 11.2 | 11.1 | 9.7 | 7.8 | 7.7 | 6.5 | 6.4 | 6.4 | 5.7 | 5.5 | 5.5 | 5.2 | 4.9 | 4.9 | 4.8 | 4.4 | 4.4 | 4.4 |
| | 230 | 406 | 9.7 | 9.7 | 8.8 | 6.8 | 6.8 | 5.9 | 5.5 | 5.5 | 5.2 | 4.7 | 4.7 | 4.7 | 4.2 | 4.2 | 4.2 | 3.8 | 3.8 | 3.8 |
| | 230 | 610 | 7.8 | 7.8 | 7.7 | 5.5 | 5.5 | 5.2 | 4.4 | 4.4 | 4.4 | 3.8 | 3.8 | 3.8 | 3.3i | 3.3i | 3.3i | 3.0i | 3.0i | 3.0i |
| **400S250-54** | 345 | 305 | 14.7 | 11.8 | 10.3 | 9.3 | 8.2 | 6.9 | 8.2 | 7.1 | 6.0 | 7.3 | 6.5 | 5.5 | 6.5 | 6.0 | 5.1 | 5.9 | 5.7 | 4.8 |
| | 345 | 406 | 12.7 | 10.7 | 9.3 | 8.5 | 7.4 | 6.3 | 7.3 | 6.5 | 5.5 | 6.2 | 5.9 | 5.0 | 5.5 | 5.5 | 4.6 | 5.0 | 5.0 | 4.3 |
| | 345 | 610 | 10.4 | 9.3 | 8.2 | 7.3 | 6.5 | 5.5 | 5.9 | 5.7 | 4.8 | 5.0 | 5.0 | 4.3 | 4.5 | 4.5 | 4.0 | 4.0 | 4.0 | 3.8 |
| **400S250-68** | 345 | 305 | 16.1 | 12.8 | 11.1 | 10.1 | 8.8 | 7.5 | 8.8 | 7.7 | 6.5 | 8.0 | 7.0 | 5.9 | 7.5 | 6.5 | 5.5 | 6.8 | 6.1 | 5.2 |
| | 345 | 406 | 14.6 | 11.6 | 10.1 | 9.2 | 8.0 | 6.8 | 8.0 | 7.0 | 5.9 | 7.2 | 6.4 | 5.4 | 6.4 | 5.9 | 5.0 | 5.8 | 5.6 | 4.7 |
| | 345 | 610 | 12.0 | 10.1 | 8.8 | 8.0 | 7.0 | 5.9 | 6.8 | 6.1 | 5.2 | 5.8 | 5.6 | 4.7 | 5.1 | 5.1 | 4.4 | 4.6 | 4.6 | 4.1 |
| **400S250-97** | 345 | 305 | 17.9 | 14.2 | 12.4 | 11.3 | 9.8 | 8.3 | 9.8 | 8.6 | 7.3 | 8.9 | 7.8 | 6.6 | 8.3 | 7.3 | 6.1 | 7.8 | 6.8 | 5.8 |
| | 345 | 406 | 16.3 | 12.9 | 11.3 | 10.2 | 8.9 | 7.5 | 8.9 | 7.8 | 6.6 | 8.1 | 7.1 | 6.0 | 7.5 | 6.6 | 5.6 | 7.1 | 6.2 | 5.2 |
| | 345 | 610 | 14.2 | 11.3 | 9.8 | 8.9 | 7.8 | 6.6 | 7.8 | 6.8 | 5.8 | 7.1 | 6.2 | 5.2 | 6.3 | 5.8 | 4.9 | 5.7 | 5.4 | 4.6 |
| **400S300-33** | 230 | 305 | 9.5 | 9.5 | 9.0 | 6.7 | 6.7 | 6.0 | 5.4 | 5.4 | 5.3 | 4.6 | 4.6 | 4.6 | 4.1i | 4.1i | 4.1i | 3.7i | 3.7i | 3.7i |
| | 230 | 406 | 8.2 | 8.2 | 8.2 | 5.7 | 5.7 | 5.5 | 4.6 | 4.6 | 4.6 | 4.0i | 4.0i | 4.0i | 3.5i | 3.5i | 3.5i | 3.2i | 3.2i | 3.2i |
| | 230 | 610 | 6.7 | 6.7 | 6.7 | 4.6 | 4.6 | 4.6 | 3.7i | 3.7i | 3.7i | 3.2i | 3.2i | 3.2i | 2.8i | 2.8i | 2.8i | 2.5i | 2.5i | 2.5i |
| **400S300-43** | 230 | 305 | 11.3 | 11.3 | 10.0 | 7.9 | 7.9 | 6.7 | 6.4 | 6.4 | 5.8 | 5.5 | 5.5 | 5.3 | 4.9 | 4.9 | 4.9 | 4.5 | 4.5 | 4.5 |
| | 230 | 406 | 9.8 | 9.8 | 9.1 | 6.8 | 6.8 | 6.1 | 5.5 | 5.5 | 5.3 | 4.7 | 4.7 | 4.7 | 4.2 | 4.2 | 4.2 | 3.8 | 3.8 | 3.8 |
| | 230 | 610 | 7.9 | 7.9 | 7.9 | 5.5 | 5.5 | 5.3 | 4.5 | 4.5 | 4.5 | 3.8 | 3.8 | 3.8 | 3.4i | 3.4i | 3.4i | 3.0i | 3.0i | 3.0i |
| **400S300-54** | 345 | 305 | 14.9 | 12.1 | 10.6 | 9.6 | 8.4 | 7.1 | 8.4 | 7.3 | 6.2 | 7.4 | 6.7 | 5.6 | 6.5 | 6.2 | 5.2 | 5.9 | 5.8 | 4.9 |
| | 345 | 406 | 12.9 | 11.0 | 9.6 | 8.7 | 7.6 | 6.4 | 7.4 | 6.7 | 5.6 | 6.3 | 6.0 | 5.1 | 5.6 | 5.6 | 4.7 | 5.1 | 5.1 | 4.5 |
| | 345 | 610 | 10.5 | 9.6 | 8.4 | 7.4 | 6.7 | 5.6 | 5.9 | 5.8 | 4.9 | 5.1 | 5.1 | 4.5 | 4.5 | 4.5 | 4.1 | 4.1 | 4.1 | 3.9 |
| **400S300-68** | 345 | 305 | 16.6 | 13.2 | 11.5 | 10.4 | 9.1 | 7.7 | 9.1 | 8.0 | 6.7 | 8.3 | 7.2 | 6.1 | 7.6 | 6.7 | 5.7 | 6.9 | 6.3 | 5.3 |
| | 345 | 406 | 15.1 | 12.0 | 10.4 | 9.5 | 8.3 | 7.0 | 8.3 | 7.2 | 6.1 | 7.4 | 6.6 | 5.5 | 6.5 | 6.1 | 5.2 | 5.9 | 5.7 | 4.8 |
| | 345 | 610 | 12.2 | 10.4 | 9.1 | 8.3 | 7.2 | 6.1 | 6.9 | 6.3 | 5.3 | 5.9 | 5.7 | 4.8 | 5.2 | 5.2 | 4.5 | 4.7 | 4.7 | 4.2 |
| **400S300-97** | 345 | 305 | 18.7 | 14.8 | 12.9 | 11.8 | 10.3 | 8.7 | 10.3 | 9.0 | 7.6 | 9.3 | 8.1 | 6.9 | 8.7 | 7.6 | 6.4 | 8.1 | 7.1 | 6.0 |
| | 345 | 406 | 16.9 | 13.5 | 11.8 | 10.7 | 9.3 | 7.9 | 9.3 | 8.1 | 6.9 | 8.5 | 7.4 | 6.2 | 7.9 | 6.9 | 5.8 | 7.2 | 6.5 | 5.5 |
| | 345 | 610 | 14.8 | 11.8 | 10.3 | 9.3 | 8.1 | 6.9 | 8.1 | 7.1 | 6.0 | 7.2 | 6.5 | 5.5 | 6.3 | 6.0 | 5.1 | 5.6 | 5.6 | 4.8 |

**NOTES:**

1) $p = I_w \{qC_eC_gC_p\}$; $I_w$ of 0.75 has been incorpotated in the deflection values of the table.
The parameters in the bracket { } must be determined by the design professional in accordance with the NBCC.

2) "e" web stiffeners required at ends; "i" web stiffeners required at interior support; "a" web stiffeners required at ends and interior supports.

Bailey Metal Products, Dass Metal Products, DCM Metal Corp., EB Métal Inc., Imperial Building Products, Manugypse, Groupe UP, Trebor Building Products Ltd.

## DOUBLE SPAN CURTAIN WALL LIMITING HEIGHTS (m)

| Stud Designation | Specified Loads $F_y$ (MPa) | Spacing (mm) | 0.25 kPa | | | 0.50 kPa | | | 0.75 kPa | | | 1.00 kPa | | | 1.25 kPa | | | 1.50 kPa | | |
|---|---|---|---|---|---|---|---|---|---|---|---|---|---|---|---|---|---|---|---|---|
| | | | L/120 | L/240 | L/360 | L/240 | L/360 | L/600 | L/240 | L/360 | L/600 | L/240 | L/360 | L/600 | L/240 | L/360 | L/600 | L/240 | L/360 | L/600 |
| **600S125-33** | 230 | 305 | 8.5 | 8.5 | 8.5 | 6.0 | 6.0 | 6.0 | 4.9 | 4.9 | 4.9 | 4.3 | 4.3 | 4.3 | 3.8i | 3.8i | 3.8i | 3.5i | 3.5i | 3.5i |
| | 230 | 406 | 7.4 | 7.4 | 7.4 | 5.2 | 5.2 | 5.2 | 4.3 | 4.3 | 4.3 | 3.7i | 3.7i | 3.7i | 3.3i | 3.3i | 3.3i | 3.0i | 3.0i | 3.0i |
| | 230 | 610 | 6.0 | 6.0 | 6.0 | 4.3 | 4.3 | 4.3 | 3.5i | 3.5i | 3.5i | 3.0i | 3.0i | 3.0i | 2.7i | 2.7i | 2.7i | 2.5i | 2.5i | 2.5i |
| **600S125-43** | 230 | 305 | 10.4 | 10.4 | 10.4 | 7.3 | 7.3 | 7.3 | 6.0 | 6.0 | 6.0 | 5.2 | 5.2 | 5.2 | 4.6 | 4.6 | 4.6 | 4.2 | 4.2 | 4.2 |
| | 230 | 406 | 9.0 | 9.0 | 9.0 | 6.4 | 6.4 | 6.4 | 5.2 | 5.2 | 5.2 | 4.5 | 4.5 | 4.5 | 4.0 | 4.0 | 4.0 | 3.7 | 3.7 | 3.7 |
| | 230 | 610 | 7.3 | 7.3 | 7.3 | 5.2 | 5.2 | 5.2 | 4.2 | 4.2 | 4.2 | 3.7 | 3.7 | 3.7 | 3.3i | 3.3i | 3.3i | 3.0i | 3.0i | 3.0i |
| **600S125-54** | 345 | 305 | 13.9 | 13.6 | 11.8 | 9.9 | 9.4 | 7.9 | 8.1 | 8.1 | 6.9 | 7.0 | 7.0 | 6.3 | 6.2 | 6.2 | 5.8 | 5.7 | 5.7 | 5.5 |
| | 345 | 406 | 12.1 | 12.1 | 10.8 | 8.5 | 8.5 | 7.2 | 7.0 | 7.0 | 6.3 | 6.0 | 6.0 | 5.7 | 5.4 | 5.4 | 5.3 | 4.9 | 4.9 | 4.9 |
| | 345 | 610 | 9.9 | 9.9 | 9.4 | 7.0 | 7.0 | 6.3 | 5.7 | 5.7 | 5.5 | 4.9 | 4.9 | 4.9 | 4.4 | 4.4 | 4.4 | 4.0 | 4.0 | 4.0 |
| **600S162-33** | 230 | 305 | 10.8 | 10.8 | 10.8 | 7.6 | 7.6 | 7.4 | 6.2i | 6.2i | 6.2i | 5.4i | 5.4i | 5.4i | 4.8i | 4.8i | 4.8i | 4.4i | 4.4i | 4.4i |
| | 230 | 406 | 9.3 | 9.3 | 9.3 | 6.6 | 6.6 | 6.6 | 5.4i | 5.4i | 5.4i | 4.7i | 4.7i | 4.7i | 4.2i | 4.2i | 4.2i | 3.8i | 3.8i | 3.8i |
| | 230 | 610 | 7.6 | 7.6 | 7.6 | 5.4i | 5.4i | 5.4i | 4.4i | 4.4i | 4.4i | 3.8i | 3.8i | 3.8i | 3.4i | 3.4i | 3.4i | 3.0a | 3.0a | 3.0a |
| **600S162-43** | 230 | 305 | 12.9 | 12.9 | 12.0 | 9.1 | 9.1 | 8.1 | 7.4 | 7.4 | 7.0 | 6.4 | 6.4 | 6.4 | 5.8 | 5.8 | 5.8 | 5.2i | 5.2i | 5.2i |
| | 230 | 406 | 11.1 | 11.1 | 10.9 | 7.9 | 7.9 | 7.3 | 6.4 | 6.4 | 6.4 | 5.6 | 5.6 | 5.6 | 5.0i | 5.0i | 5.0i | 4.5i | 4.5i | 4.5i |
| | 230 | 610 | 9.1 | 9.1 | 9.1 | 6.4 | 6.4 | 6.4 | 5.2i | 5.2i | 5.2i | 4.5i | 4.5i | 4.5i | 4.1i | 4.1i | 4.1i | 3.7i | 3.7i | 3.7i |
| **600S162-54** | 345 | 305 | 17.1 | 14.8 | 12.9 | 11.7 | 10.2 | 8.6 | 9.9 | 8.9 | 7.5 | 8.6 | 8.1 | 6.9 | 7.7 | 7.5 | 6.4 | 7.0 | 7.0 | 6.0 |
| | 345 | 406 | 14.8 | 13.4 | 11.7 | 10.5 | 9.3 | 7.8 | 8.6 | 8.1 | 6.9 | 7.4 | 7.4 | 6.2 | 6.6 | 6.6 | 5.8 | 6.1 | 6.1 | 5.4 |
| | 345 | 610 | 12.1 | 11.7 | 10.2 | 8.6 | 8.1 | 6.9 | 7.0 | 7.0 | 6.0 | 6.1 | 6.1 | 5.4 | 5.4 | 5.4 | 5.1 | 4.9 | 4.9 | 4.8 |
| **600S162-68** | 345 | 305 | 19.9 | 15.8 | 13.8 | 12.6 | 11.0 | 9.3 | 11.0 | 9.6 | 8.1 | 9.9 | 8.7 | 7.3 | 8.9 | 8.1 | 6.8 | 8.1 | 7.6 | 6.4 |
| | 345 | 406 | 17.2 | 14.4 | 12.6 | 11.4 | 10.0 | 8.4 | 9.9 | 8.7 | 7.3 | 8.6 | 7.9 | 6.7 | 7.7 | 7.3 | 6.2 | 7.0 | 6.9 | 5.8 |
| | 345 | 610 | 14.1 | 12.6 | 11.0 | 9.9 | 8.7 | 7.3 | 8.1 | 7.6 | 6.4 | 7.0 | 6.9 | 5.8 | 6.3 | 6.3 | 5.4 | 5.7 | 5.7 | 5.1 |
| **600S162-97** | 345 | 305 | 22.1 | 17.5 | 15.3 | 13.9 | 12.2 | 10.3 | 12.2 | 10.6 | 9.0 | 11.1 | 9.7 | 8.1 | 10.3 | 9.0 | 7.6 | 9.7 | 8.4 | 7.1 |
| | 345 | 406 | 20.1 | 15.9 | 13.9 | 12.7 | 11.1 | 9.3 | 11.1 | 9.7 | 8.1 | 10.0 | 8.8 | 7.4 | 9.3 | 8.1 | 6.9 | 8.7 | 7.7 | 6.5 |
| | 345 | 610 | 17.4 | 13.9 | 12.2 | 11.1 | 9.7 | 8.1 | 9.7 | 8.4 | 7.1 | 8.7 | 7.7 | 6.5 | 7.8 | 7.1 | 6.0 | 7.1 | 6.7 | 5.6 |
| **600S200-33** | 230 | 305 | 11.5 | 11.5 | 11.5 | 8.1 | 8.1 | 7.7 | 6.6i | 6.6i | 6.6i | 5.8i | 5.8i | 5.8i | 5.1i | 5.1i | 5.1i | 4.7i | 4.7i | 4.7i |
| | 230 | 406 | 10.0 | 10.0 | 10.0 | 7.1i | 7.1i | 7.0i | 5.8i | 5.8i | 5.8i | 5.0i | 5.0i | 5.0i | 4.4i | 4.4i | 4.4i | 4.0i | 4.0i | 4.0i |
| | 230 | 610 | 8.1 | 8.1 | 8.1 | 5.8i | 5.8i | 5.8i | 4.7i | 4.7i | 4.7i | 4.0i | 4.0i | 4.0i | 3.5i | 3.5i | 3.5i | 3.1a | 3.1a | 3.1a |
| **600S200-43** | 230 | 305 | 13.8 | 13.8 | 12.6 | 9.7 | 9.7 | 8.5 | 7.9 | 7.9 | 7.4 | 6.9 | 6.9 | 6.7 | 6.2 | 6.2 | 6.2 | 5.6i | 5.6i | 5.6i |
| | 230 | 406 | 11.9 | 11.9 | 11.5 | 8.4 | 8.4 | 7.7 | 6.9 | 6.9 | 6.7 | 6.0i | 6.0i | 6.0i | 5.3i | 5.3i | 5.3i | 4.9i | 4.9i | 4.9i |
| | 230 | 610 | 9.7 | 9.7 | 9.7 | 6.9 | 6.9 | 6.7 | 5.6i | 5.6i | 5.6i | 4.9i | 4.9i | 4.9i | 4.4i | 4.4i | 4.4i | 4.0i | 4.0i | 4.0i |
| **600S200-54** | 345 | 305 | 18.3 | 15.5 | 13.6 | 12.3 | 10.8 | 9.1 | 10.6 | 9.4 | 7.9 | 9.1 | 8.5 | 7.2 | 8.2 | 7.9 | 6.7 | 7.5 | 7.5 | 6.3 |
| | 345 | 406 | 15.8 | 14.1 | 12.3 | 11.2 | 9.8 | 8.2 | 9.1 | 8.5 | 7.2 | 7.9 | 7.8 | 6.5 | 7.1 | 7.1 | 6.1 | 6.5 | 6.5 | 5.7 |
| | 345 | 610 | 12.9 | 12.3 | 10.8 | 9.1 | 8.5 | 7.2 | 7.5 | 7.5 | 6.3 | 6.5 | 6.5 | 5.7 | 5.8 | 5.8 | 5.3 | 5.3 | 5.3 | 5.0 |
| **600S200-68** | 345 | 305 | 21.0 | 16.7 | 14.5 | 13.2 | 11.5 | 9.7 | 11.5 | 10.1 | 8.5 | 10.5 | 9.2 | 7.7 | 9.5 | 8.5 | 7.2 | 8.7 | 8.0 | 6.8 |
| | 345 | 406 | 18.4 | 15.1 | 13.2 | 12.0 | 10.5 | 8.8 | 10.5 | 9.2 | 7.7 | 9.2 | 8.3 | 7.0 | 8.2 | 7.7 | 6.5 | 7.5 | 7.3 | 6.1 |
| | 345 | 610 | 15.0 | 13.2 | 11.5 | 10.5 | 9.2 | 7.7 | 8.7 | 8.0 | 6.8 | 7.5 | 7.3 | 6.1 | 6.7 | 6.7 | 5.7 | 6.1 | 6.1 | 5.4 |
| **600S200-97** | 345 | 305 | 23.3 | 18.5 | 16.2 | 14.7 | 12.8 | 10.8 | 12.8 | 11.2 | 9.4 | 11.6 | 10.2 | 8.6 | 10.8 | 9.4 | 8.0 | 10.2 | 8.9 | 7.5 |
| | 345 | 406 | 21.2 | 16.8 | 14.7 | 13.3 | 11.6 | 9.8 | 11.6 | 10.2 | 8.6 | 10.6 | 9.2 | 7.8 | 9.8 | 8.6 | 7.2 | 9.2 | 8.1 | 6.8 |
| | 345 | 610 | 18.5 | 14.7 | 12.8 | 11.6 | 10.2 | 8.6 | 10.2 | 8.9 | 7.5 | 9.2 | 8.1 | 6.8 | 8.4 | 7.5 | 6.3 | 7.6 | 7.1 | 6.0 |
| **600S250-33** | 230 | 305 | 11.8 | 11.8 | 11.8 | 8.3 | 8.3 | 8.0 | 6.8i | 6.8i | 6.8i | 5.9i | 5.9i | 5.9i | 5.3i | 5.3i | 5.3i | 4.8i | 4.8i | 4.8i |
| | 230 | 406 | 10.2 | 10.2 | 10.2 | 7.2i | 7.2i | 7.2i | 5.9i | 5.9i | 5.9i | 5.1i | 5.1i | 5.1i | 4.5i | 4.5i | 4.5i | 4.0i | 4.0i | 4.0i |
| | 230 | 610 | 8.3 | 8.3 | 8.3 | 5.9i | 5.9i | 5.9i | 4.8i | 4.8i | 4.8i | 4.0i | 4.0i | 4.0i | 3.5i | 3.5i | 3.5i | 3.1a | 3.1a | 3.1a |
| **600S250-43** | 230 | 305 | 14.1 | 14.1 | 13.2 | 10.0 | 10.0 | 8.8 | 8.2 | 8.2 | 7.7 | 7.1 | 7.1 | 7.0 | 6.3i | 6.3i | 6.3i | 5.8i | 5.8i | 5.8i |
| | 230 | 406 | 12.2 | 12.2 | 12.0 | 8.7 | 8.7 | 8.0 | 7.1 | 7.1 | 7.0 | 6.1i | 6.1i | 6.1i | 5.5i | 5.5i | 5.5i | 5.0i | 5.0i | 5.0i |
| | 230 | 610 | 10.0 | 10.0 | 10.0 | 7.1 | 7.1 | 7.0 | 5.8i | 5.8i | 5.8i | 5.0i | 5.0i | 5.0i | 4.5i | 4.5i | 4.5i | 4.1i | 4.1i | 4.1i |
| **600S250-54** | 345 | 305 | 18.7 | 16.0 | 14.0 | 12.7 | 11.1 | 9.4 | 10.8 | 9.7 | 8.2 | 9.4 | 8.8 | 7.4 | 8.4 | 8.2 | 6.9 | 7.7 | 7.7 | 6.5 |
| | 345 | 406 | 16.2 | 14.6 | 12.7 | 11.5 | 10.1 | 8.5 | 9.4 | 8.8 | 7.4 | 8.1 | 8.0 | 6.8 | 7.3 | 7.3 | 6.3 | 6.6 | 6.6 | 5.9 |
| | 345 | 610 | 13.3 | 12.7 | 11.1 | 9.4 | 8.8 | 7.4 | 7.7 | 7.7 | 6.5 | 6.6 | 6.6 | 5.9 | 5.9 | 5.9 | 5.5 | 5.4 | 5.4 | 5.2 |
| **600S250-68** | 345 | 305 | 21.8 | 17.4 | 15.2 | 13.8 | 12.1 | 10.2 | 12.1 | 10.5 | 8.9 | 10.9 | 9.6 | 8.1 | 9.8 | 8.9 | 7.5 | 8.9 | 8.4 | 7.1 |
| | 345 | 406 | 18.9 | 15.8 | 13.8 | 12.5 | 11.0 | 9.2 | 10.9 | 9.6 | 8.1 | 9.5 | 8.7 | 7.3 | 8.5 | 8.1 | 6.8 | 7.7 | 7.6 | 6.4 |
| | 345 | 610 | 15.4 | 13.8 | 12.1 | 10.9 | 9.6 | 8.1 | 8.9 | 8.4 | 7.1 | 7.7 | 7.6 | 6.4 | 6.9 | 6.9 | 5.9 | 6.3 | 6.3 | 5.6 |
| **600S250-97** | 345 | 305 | 24.5 | 19.4 | 17.0 | 15.4 | 13.5 | 11.4 | 13.5 | 11.8 | 9.9 | 12.2 | 10.7 | 9.0 | 11.4 | 9.9 | 8.4 | 10.7 | 9.3 | 7.9 |
| | 345 | 406 | 22.2 | 17.6 | 15.4 | 14.0 | 12.2 | 10.3 | 12.2 | 10.7 | 9.0 | 11.1 | 9.7 | 8.2 | 10.3 | 9.0 | 7.6 | 9.7 | 8.5 | 7.2 |
| | 345 | 610 | 19.4 | 15.4 | 13.5 | 12.2 | 10.7 | 9.0 | 10.7 | 9.3 | 7.9 | 9.7 | 8.5 | 7.2 | 8.7 | 7.9 | 6.6 | 7.9 | 7.4 | 6.2 |
| **600S300-33** | 230 | 305 | 11.9 | 11.9 | 11.9 | 8.4 | 8.4 | 8.2 | 6.9i | 6.9i | 6.9i | 6.0i | 6.0i | 6.0i | 5.3i | 5.3i | 5.3i | 4.8i | 4.8i | 4.8i |
| | 230 | 406 | 10.3 | 10.3 | 10.3 | 7.3i | 7.3i | 7.3i | 6.0i | 6.0i | 6.0i | 5.2i | 5.2i | 5.2i | 4.6i | 4.6i | 4.6i | 4.1i | 4.1i | 4.1i |
| | 230 | 610 | 8.4 | 8.4 | 8.4 | 6.0i | 6.0i | 6.0i | 4.8i | 4.8i | 4.8i | 4.1i | 4.1i | 4.1i | 3.6i | 3.6i | 3.6i | 3.2a | 3.2a | 3.2a |
| **600S300-43** | 230 | 305 | 14.4 | 14.4 | 13.5 | 10.2 | 10.2 | 9.1 | 8.3 | 8.3 | 7.9 | 7.2 | 7.2 | 7.2 | 6.4i | 6.4i | 6.4i | 5.9i | 5.9i | 5.9i |
| | 230 | 406 | 12.4 | 12.4 | 12.3 | 8.8 | 8.8 | 8.2 | 7.2 | 7.2 | 7.2 | 6.2i | 6.2i | 6.2i | 5.6i | 5.6i | 5.6i | 5.1i | 5.1i | 5.1i |
| | 230 | 610 | 10.2 | 10.2 | 10.2 | 7.2 | 7.2 | 7.2 | 5.9i | 5.9i | 5.9i | 5.1i | 5.1i | 5.1i | 4.5i | 4.5i | 4.5i | 4.1i | 4.1i | 4.1i |
| **600S300-54** | 345 | 305 | 19.1 | 16.4 | 14.4 | 13.0 | 11.4 | 9.6 | 11.0 | 10.0 | 8.4 | 9.5 | 9.0 | 7.6 | 8.5 | 8.4 | 7.1 | 7.8 | 7.8 | 6.7 |
| | 345 | 406 | 16.5 | 14.9 | 13.0 | 11.7 | 10.4 | 8.7 | 9.5 | 9.0 | 7.6 | 8.3 | 8.2 | 6.9 | 7.4 | 7.4 | 6.4 | 6.7 | 6.7 | 6.1 |
| | 345 | 610 | 13.5 | 13.0 | 11.4 | 9.5 | 9.0 | 7.6 | 7.8 | 7.8 | 6.7 | 6.7 | 6.7 | 6.1 | 6.0 | 6.0 | 5.6 | 5.5 | 5.5 | 5.3 |
| **600S300-68** | 345 | 305 | 22.3 | 17.9 | 15.6 | 14.2 | 12.4 | 10.4 | 12.4 | 10.8 | 9.1 | 11.1 | 9.8 | 8.3 | 10.0 | 9.1 | 7.7 | 9.1 | 8.6 | 7.2 |
| | 345 | 406 | 19.3 | 16.2 | 14.2 | 12.9 | 11.3 | 9.5 | 11.1 | 9.8 | 8.3 | 9.6 | 8.9 | 7.5 | 8.6 | 8.3 | 7.0 | 7.9 | 7.8 | 6.6 |
| | 345 | 610 | 15.7 | 14.2 | 12.4 | 11.1 | 9.8 | 8.3 | 9.1 | 8.6 | 7.2 | 7.9 | 7.8 | 6.6 | 7.0 | 7.0 | 6.1 | 6.4 | 6.4 | 5.7 |
| **600S300-97** | 345 | 305 | 25.4 | 20.1 | 17.6 | 16.0 | 14.0 | 11.8 | 14.0 | 12.2 | 10.3 | 12.7 | 11.1 | 9.3 | 11.8 | 10.3 | 8.7 | 11.1 | 9.7 | 8.2 |
| | 345 | 406 | 23.1 | 18.3 | 16.0 | 14.5 | 12.7 | 10.7 | 12.7 | 11.1 | 9.3 | 11.5 | 10.1 | 8.5 | 10.7 | 9.3 | 7.9 | 9.9 | 8.8 | 7.4 |
| | 345 | 610 | 19.9 | 16.0 | 14.0 | 12.7 | 11.1 | 9.3 | 11.1 | 9.7 | 8.2 | 9.9 | 8.8 | 7.4 | 8.9 | 8.2 | 6.9 | 8.1 | 7.7 | 6.5 |

**NOTES:**

1) $p = I_w \{qC_eC_gC_p\}$; $I_w$ of 0.75 has been incorpotated in the deflection values of the table.
The parameters in the bracket { } must be determined by the design professional in accordance with the NBCC.

2) "e" web stiffeners required at ends; "i" web stiffeners required at interior support; "a" web stiffeners required at ends and interior supports.

Bailey Metal Products, Dass Metal Products, DCM Metal Corp., EB Métal Inc., Imperial Building Products, Manugypse, Groupe UP, Trebor Building Products Ltd.

## DOUBLE SPAN CURTAIN WALL LIMITING HEIGHTS (m)

| Stud Designation | Specified Loads $F_y$ (MPa) | Spacing (mm) | 0.25 kPa | | | 0.50 kPa | | | 0.75 kPa | | | 1.00 kPa | | | 1.25 kPa | | | 1.50 kPa | | |
|---|---|---|---|---|---|---|---|---|---|---|---|---|---|---|---|---|---|---|---|---|
| | | | L/120 | L/240 | L/360 | L/240 | L/360 | L/600 | L/240 | L/360 | L/600 | L/240 | L/360 | L/600 | L/240 | L/360 | L/600 | L/240 | L/360 | L/600 |
| **800S162-43** | 230 | 305 | 15.0 | 15.0 | 15.0 | 10.6 | 10.6 | 10.0 | 8.6 | 8.6 | 8.6 | 7.5 | 7.5 | 7.5 | 6.7i | 6.7i | 6.7i | 6.1i | 6.1i | 6.1i |
| | 230 | 406 | 13.0 | 13.0 | 13.0 | 9.2 | 9.2 | 9.1 | 7.5 | 7.5 | 7.5 | 6.5i | 6.5i | 6.5i | 5.8i | 5.8i | 5.8i | 5.3a | 5.3a | 5.3a |
| | 230 | 610 | 10.6 | 10.6 | 10.6 | 7.5 | 7.5 | 7.5 | 6.1i | 6.1i | 6.1i | 5.3a | 5.3a | 5.3a | 4.7a | 4.7a | 4.7a | 4.2a | 4.2a | 4.2a |
| **800S162-54** | 345 | 305 | 20.0 | 18.4 | 16.1 | 14.1 | 12.8 | 10.8 | 11.5 | 11.2 | 9.4 | 10.0 | 10.0 | 8.6 | 8.9 | 8.9 | 7.9 | 8.2 | 8.2 | 7.5 |
| | 345 | 406 | 17.3 | 16.8 | 14.6 | 12.2 | 11.6 | 9.8 | 10.0 | 10.0 | 8.6 | 8.6 | 8.6 | 7.8 | 7.7 | 7.7 | 7.2 | 7.1 | 7.1 | 6.8 |
| | 345 | 610 | 14.1 | 14.1 | 12.8 | 10.0 | 10.0 | 8.6 | 8.2 | 8.2 | 7.5 | 7.1 | 7.1 | 6.8 | 6.3 | 6.3 | 6.3 | 5.8 | 5.8 | 5.8 |
| **800S162-68** | 345 | 305 | 23.4 | 20.0 | 17.4 | 15.8 | 13.8 | 11.7 | 13.5 | 12.1 | 10.2 | 11.7 | 11.0 | 9.3 | 10.5 | 10.2 | 8.6 | 9.5 | 9.5 | 8.1 |
| | 345 | 406 | 20.3 | 18.1 | 15.8 | 14.3 | 12.6 | 10.6 | 11.7 | 11.0 | 9.3 | 10.1 | 10.0 | 8.4 | 9.1 | 9.1 | 7.8 | 8.3 | 8.3 | 7.4 |
| | 345 | 610 | 16.5 | 15.8 | 13.8 | 11.7 | 11.0 | 9.3 | 9.5 | 9.5 | 8.1 | 8.3 | 8.3 | 7.4 | 7.4 | 7.4 | 6.8 | 6.8 | 6.8 | 6.4 |
| **800S162-97** | 345 | 305 | 28.0 | 22.2 | 19.4 | 17.6 | 15.4 | 13.0 | 15.4 | 13.4 | 11.3 | 14.0 | 12.2 | 10.3 | 13.0 | 11.3 | 9.6 | 12.1 | 10.7 | 9.0 |
| | 345 | 406 | 25.4 | 20.2 | 17.6 | 16.0 | 14.0 | 11.8 | 14.0 | 12.2 | 10.3 | 12.7 | 11.1 | 9.4 | 11.4 | 10.3 | 8.7 | 10.4 | 9.7 | 8.2 |
| | 345 | 610 | 20.9 | 17.6 | 15.4 | 14.0 | 12.2 | 10.3 | 12.1 | 10.7 | 9.0 | 10.4 | 9.7 | 8.2 | 9.3 | 9.0 | 7.6 | 8.5 | 8.5 | 7.1 |
| **800S200-43** | 230 | 305 | 16.1 | 16.1 | 15.8 | 11.4 | 11.4 | 10.6 | 9.3 | 9.3 | 9.3 | 8.0i | 8.0i | 8.0i | 7.2i | 7.2i | 7.2i | 6.6a | 6.6a | 6.6a |
| | 230 | 406 | 13.9 | 13.9 | 13.9 | 9.9 | 9.9 | 9.6 | 8.0i | 8.0i | 8.0i | 7.0i | 7.0i | 7.0i | 6.2a | 6.2a | 6.2a | 5.7a | 5.7a | 5.7a |
| | 230 | 610 | 11.4 | 11.4 | 11.4 | 8.0i | 8.0i | 8.0i | 6.6a | 6.6a | 6.6a | 5.7a | 5.7a | 5.7a | 5.1a | 5.1a | 5.1a | 4.6a | 4.6a | 4.6a |
| **800S200-54** | 345 | 305 | 21.4 | 19.5 | 17.0 | 15.1 | 13.5 | 11.4 | 12.4 | 11.8 | 10.0 | 10.7 | 10.7 | 9.0 | 9.6 | 9.6 | 8.4 | 8.7 | 8.7 | 7.9 |
| | 345 | 406 | 18.5 | 17.7 | 15.5 | 13.1 | 12.3 | 10.4 | 10.7 | 10.7 | 9.0 | 9.3 | 9.3 | 8.2 | 8.3 | 8.3 | 7.6 | 7.6 | 7.6 | 7.2 |
| | 345 | 610 | 15.1 | 15.1 | 13.5 | 10.7 | 10.7 | 9.0 | 8.7 | 8.7 | 7.9 | 7.6 | 7.6 | 7.2 | 6.8 | 6.8 | 6.7 | 6.2i | 6.2i | 6.2i |
| **800S200-68** | 345 | 305 | 25.0 | 20.9 | 18.3 | 16.6 | 14.5 | 12.2 | 14.4 | 12.7 | 10.7 | 12.5 | 11.5 | 9.7 | 11.2 | 10.7 | 9.0 | 10.2 | 10.1 | 8.5 |
| | 345 | 406 | 21.7 | 19.0 | 16.6 | 15.1 | 13.2 | 11.1 | 12.5 | 11.5 | 9.7 | 10.8 | 10.5 | 8.8 | 9.7 | 9.7 | 8.2 | 8.8 | 8.8 | 7.7 |
| | 345 | 610 | 17.7 | 16.6 | 14.5 | 12.5 | 11.5 | 9.7 | 10.2 | 10.1 | 8.5 | 8.8 | 8.8 | 7.7 | 7.9 | 7.9 | 7.2 | 7.2 | 7.2 | 6.7 |
| **800S200-97** | 345 | 305 | 29.3 | 23.3 | 20.3 | 18.5 | 16.1 | 13.6 | 16.1 | 14.1 | 11.9 | 14.7 | 12.8 | 10.8 | 13.6 | 11.9 | 10.0 | 12.8 | 11.2 | 9.4 |
| | 345 | 406 | 26.7 | 21.2 | 18.5 | 16.8 | 14.7 | 12.4 | 14.7 | 12.8 | 10.8 | 13.3 | 11.6 | 9.8 | 12.2 | 10.8 | 9.1 | 11.1 | 10.2 | 8.6 |
| | 345 | 610 | 22.3 | 18.5 | 16.1 | 14.7 | 12.8 | 10.8 | 12.8 | 11.2 | 9.4 | 11.1 | 10.2 | 8.6 | 10.0 | 9.4 | 8.0 | 9.1 | 8.9 | 7.5 |
| **800S250-43** | 230 | 305 | 16.5 | 16.5 | 16.5 | 11.7 | 11.7 | 11.0 | 9.5 | 9.5 | 9.5 | 8.2i | 8.2i | 8.2i | 7.4a | 7.4a | 7.4a | 6.7a | 6.7a | 6.7a |
| | 230 | 406 | 14.3 | 14.3 | 14.3 | 10.1 | 10.1 | 10.0 | 8.2i | 8.2i | 8.2i | 7.1a | 7.1a | 7.1a | 6.4a | 6.4a | 6.4a | 5.8a | 5.8a | 5.8a |
| | 230 | 610 | 11.7 | 11.7 | 11.7 | 8.2i | 8.2i | 8.2i | 6.7a | 6.7a | 6.7a | 5.8a | 5.8a | 5.8a | 5.2a | 5.2a | 5.2a | 4.6a | 4.6a | 4.6a |
| **800S250-54** | 345 | 305 | 21.9 | 20.1 | 17.5 | 15.5 | 13.9 | 11.7 | 12.7 | 12.2 | 10.2 | 11.0 | 11.0 | 9.3 | 9.8 | 9.8 | 8.6 | 8.9 | 8.9 | 8.1 |
| | 345 | 406 | 19.0 | 18.2 | 15.9 | 13.4 | 12.6 | 10.7 | 11.0 | 11.0 | 9.3 | 9.5 | 9.5 | 8.5 | 8.5 | 8.5 | 7.9 | 7.8 | 7.8 | 7.4 |
| | 345 | 610 | 15.5 | 15.5 | 13.9 | 11.0 | 11.0 | 9.3 | 8.9 | 8.9 | 8.1 | 7.8 | 7.8 | 7.4 | 6.9 | 6.9 | 6.9 | 6.3i | 6.3i | 6.3i |
| **800S250-68** | 345 | 305 | 25.7 | 21.8 | 19.0 | 17.3 | 15.1 | 12.7 | 14.8 | 13.2 | 11.1 | 12.8 | 12.0 | 10.1 | 11.5 | 11.1 | 9.4 | 10.5 | 10.5 | 8.8 |
| | 345 | 406 | 22.2 | 19.8 | 17.3 | 15.7 | 13.7 | 11.6 | 12.8 | 12.0 | 10.1 | 11.1 | 10.9 | 9.2 | 9.9 | 9.9 | 8.5 | 9.1 | 9.1 | 8.0 |
| | 345 | 610 | 18.1 | 17.3 | 15.1 | 12.8 | 12.0 | 10.1 | 10.5 | 10.5 | 8.8 | 9.1 | 9.1 | 8.0 | 8.1 | 8.1 | 7.4 | 7.4 | 7.4 | 7.0 |
| **800S250-97** | 345 | 305 | 30.7 | 24.3 | 21.3 | 19.3 | 16.9 | 14.2 | 16.9 | 14.7 | 12.4 | 15.3 | 13.4 | 11.3 | 14.2 | 12.4 | 10.5 | 13.3 | 11.7 | 9.9 |
| | 345 | 406 | 27.9 | 22.1 | 19.3 | 17.5 | 15.3 | 12.9 | 15.3 | 13.4 | 11.3 | 13.9 | 12.2 | 10.3 | 12.6 | 11.3 | 9.5 | 11.5 | 10.6 | 9.0 |
| | 345 | 610 | 23.0 | 19.3 | 16.9 | 15.3 | 13.4 | 11.3 | 13.3 | 11.7 | 9.9 | 11.5 | 10.6 | 9.0 | 10.3 | 9.9 | 8.3 | 9.4 | 9.3 | 7.8 |
| **800S300-43** | 230 | 305 | 16.7 | 16.7 | 16.7 | 11.8 | 11.8 | 11.3 | 9.7 | 9.7 | 9.7 | 8.4i | 8.4i | 8.4i | 7.5a | 7.5a | 7.5a | 6.8a | 6.8a | 6.8a |
| | 230 | 406 | 14.5 | 14.5 | 14.5 | 10.2 | 10.2 | 10.2 | 8.4i | 8.4i | 8.4i | 7.2a | 7.2a | 7.2a | 6.5a | 6.5a | 6.5a | 5.9a | 5.9a | 5.9a |
| | 230 | 610 | 11.8 | 11.8 | 11.8 | 8.4i | 8.4i | 8.4i | 6.8a | 6.8a | 6.8a | 5.9a | 5.9a | 5.9a | 5.2a | 5.2a | 5.2a | 4.6a | 4.6a | 4.6a |
| **800S300-54** | 345 | 305 | 22.2 | 20.5 | 17.9 | 15.7 | 14.2 | 12.0 | 12.8 | 12.4 | 10.5 | 11.1 | 11.1 | 9.5 | 9.9 | 9.9 | 8.8 | 9.1 | 9.1 | 8.3 |
| | 345 | 406 | 19.3 | 18.6 | 16.3 | 13.6 | 12.9 | 10.9 | 11.1 | 11.1 | 9.5 | 9.6 | 9.6 | 8.7 | 8.6 | 8.6 | 8.0 | 7.9 | 7.9 | 7.6 |
| | 345 | 610 | 15.7 | 15.7 | 14.2 | 11.1 | 11.1 | 9.5 | 9.1 | 9.1 | 8.3 | 7.9 | 7.9 | 7.6 | 7.0 | 7.0 | 7.0 | 6.4i | 6.4i | 6.4i |
| **800S300-68** | 345 | 305 | 26.1 | 22.3 | 19.5 | 17.7 | 15.5 | 13.0 | 15.1 | 13.5 | 11.4 | 13.0 | 12.3 | 10.3 | 11.7 | 11.4 | 9.6 | 10.7 | 10.7 | 9.0 |
| | 345 | 406 | 22.6 | 20.3 | 17.7 | 16.0 | 14.0 | 11.8 | 13.0 | 12.3 | 10.3 | 11.3 | 11.1 | 9.4 | 10.1 | 10.1 | 8.7 | 9.2 | 9.2 | 8.2 |
| | 345 | 610 | 18.4 | 17.7 | 15.5 | 13.0 | 12.3 | 10.3 | 10.7 | 10.7 | 9.0 | 9.2 | 9.2 | 8.2 | 8.2 | 8.2 | 7.6 | 7.5 | 7.5 | 7.2 |
| **800S300-97** | 345 | 305 | 31.7 | 25.1 | 22.0 | 20.0 | 17.4 | 14.7 | 17.4 | 15.2 | 12.8 | 15.8 | 13.8 | 11.7 | 14.7 | 12.8 | 10.8 | 13.5 | 12.1 | 10.2 |
| | 345 | 406 | 28.7 | 22.8 | 20.0 | 18.1 | 15.8 | 13.4 | 15.8 | 13.8 | 11.7 | 14.4 | 12.6 | 10.6 | 12.8 | 11.7 | 9.8 | 11.7 | 11.0 | 9.3 |
| | 345 | 610 | 23.4 | 20.0 | 17.4 | 15.8 | 13.8 | 11.7 | 13.5 | 12.1 | 10.2 | 11.7 | 11.0 | 9.3 | 10.5 | 10.2 | 8.6 | 9.6 | 9.6 | 8.1 |

**NOTES:**

1) $p = I_w \{qC_eC_gC_p\}$; $I_w$ of 0.75 has been incorpotated in the deflection values of the table.
The parameters in the bracket { } must be determined by the design professional in accordance with the NBCC.

2) "e" web stiffeners required at ends; "i" web stiffeners required at interior support; "a" web stiffeners required at ends and interior supports.

Bailey Metal Products, Dass Metal Products, DCM Metal Corp., EB Métal Inc., Imperial Building Products, Manugypse, Groupe UP, Trebor Building Products Ltd.

## DOUBLE SPAN CURTAIN WALL LIMITING HEIGHTS (m)

| Stud Designation | Specified Loads $F_y$ (MPa) | Spacing (mm) | 1.75 kPa | | | 2.00 kPa | | | 2.25 kPa | | | 2.50 kPa | | | 2.75 kPa | | | 3.00 kPa | | |
|---|---|---|---|---|---|---|---|---|---|---|---|---|---|---|---|---|---|---|---|---|
| | | | L/240 | L/360 | L/600 | L/240 | L/360 | L/600 | L/240 | L/360 | L/600 | L/240 | L/360 | L/600 | L/240 | L/360 | L/600 | L/240 | L/360 | L/600 |
| **362S125-33** | 230 | 305 | 2.4 | 2.4 | 2.4 | 2.3 | 2.3 | 2.3 | 2.1i | 2.1i | 2.1i | 2.0i | 2.0i | 2.0i | 1.9i | 1.9i | 1.9i | 1.8i | 1.8i | 1.8i |
| | 230 | 406 | 2.1i | 2.1i | 2.1i | 1.9i | 1.9i | 1.9i | 1.8i | 1.8i | 1.8i | 1.7i | 1.7i | 1.7i | 1.6i | 1.6i | 1.6i | 1.5i | 1.5i | 1.5i |
| | 230 | 610 | 1.7i | 1.7i | 1.7i | 1.5i | 1.5i | 1.5i | 1.4i | 1.4i | 1.4i | 1.3i | 1.3i | 1.3i | 1.3i | 1.3i | 1.3i | 1.2i | 1.2i | 1.2i |
| **362S125-43** | 230 | 305 | 2.9 | 2.9 | 2.9 | 2.7 | 2.7 | 2.7 | 2.6 | 2.6 | 2.6 | 2.4 | 2.4 | 2.4 | 2.3 | 2.3 | 2.3 | 2.2 | 2.2 | 2.2 |
| | 230 | 406 | 2.5 | 2.5 | 2.5 | 2.4 | 2.4 | 2.4 | 2.2 | 2.2 | 2.2 | 2.1 | 2.1 | 2.1 | 2.0 | 2.0 | 2.0 | 1.9 | 1.9 | 1.9 |
| | 230 | 610 | 2.0 | 2.0 | 2.0 | 1.9 | 1.9 | 1.9 | 1.8 | 1.8 | 1.8 | 1.7i | 1.7i | 1.7i | 1.6i | 1.6i | 1.6i | 1.5i | 1.5i | 1.5i |
| **362S125-54** | 345 | 305 | 3.9 | 3.9 | 3.5 | 3.6 | 3.6 | 3.3 | 3.4 | 3.4 | 3.2 | 3.3 | 3.3 | 3.1 | 3.1 | 3.1 | 3.0 | 3.0 | 3.0 | 2.9 |
| | 345 | 406 | 3.4 | 3.4 | 3.2 | 3.2 | 3.2 | 3.0 | 3.0 | 3.0 | 2.9 | 2.8 | 2.8 | 2.8 | 2.7 | 2.7 | 2.7 | 2.6 | 2.6 | 2.6 |
| | 345 | 610 | 2.7 | 2.7 | 2.7 | 2.6 | 2.6 | 2.6 | 2.4 | 2.4 | 2.4 | 2.3 | 2.3 | 2.3 | 2.2 | 2.2 | 2.2 | 2.0 | 2.0 | 2.0 |
| **362S162-33** | 230 | 305 | 2.9i | 2.9i | 2.9i | 2.7i | 2.7i | 2.7i | 2.5i | 2.5i | 2.5i | 2.4i | 2.4i | 2.4i | 2.3i | 2.3i | 2.3i | 2.1i | 2.1i | 2.1i |
| | 230 | 406 | 2.5i | 2.5i | 2.5i | 2.3i | 2.3i | 2.3i | 2.1i | 2.1i | 2.1i | 2.0i | 2.0i | 2.0i | 1.9i | 1.9i | 1.9i | 1.8i | 1.8i | 1.8i |
| | 230 | 610 | 1.9i | 1.9i | 1.9i | 1.8i | 1.8i | 1.8i | 1.7i | 1.7i | 1.7i | 1.6i | 1.6i | 1.6i | 1.5i | 1.5i | 1.5i | 1.4i | 1.4i | 1.4i |
| **362S162-43** | 230 | 305 | 3.5 | 3.5 | 3.5 | 3.2 | 3.2 | 3.2 | 3.0 | 3.0 | 3.0 | 2.9 | 2.9 | 2.9 | 2.7 | 2.7 | 2.7 | 2.6 | 2.6 | 2.6 |
| | 230 | 406 | 3.0 | 3.0 | 3.0 | 2.7 | 2.7 | 2.7 | 2.6 | 2.6 | 2.6 | 2.4 | 2.4 | 2.4 | 2.3i | 2.3i | 2.3i | 2.2i | 2.2i | 2.2i |
| | 230 | 610 | 2.3i | 2.3i | 2.3i | 2.2i | 2.2i | 2.2i | 2.0i | 2.0i | 2.0i | 1.9i | 1.9i | 1.9i | 1.8i | 1.8i | 1.8i | 1.7i | 1.7i | 1.7i |
| **362S162-54** | 345 | 305 | 4.7 | 4.5 | 3.8 | 4.4 | 4.3 | 3.7 | 4.1 | 4.1 | 3.5 | 3.9 | 3.9 | 3.4 | 3.7 | 3.7 | 3.3 | 3.5 | 3.5 | 3.2 |
| | 345 | 406 | 4.0 | 4.0 | 3.5 | 3.7 | 3.7 | 3.3 | 3.5 | 3.5 | 3.2 | 3.3 | 3.3 | 3.1 | 3.1 | 3.1 | 3.0 | 3.0 | 3.0 | 2.9 |
| | 345 | 610 | 3.2 | 3.2 | 3.0 | 3.0 | 3.0 | 2.9 | 2.8 | 2.8 | 2.8 | 2.6 | 2.6 | 2.6 | 2.5 | 2.5 | 2.5 | 2.3 | 2.3 | 2.3 |
| **362S162-68** | 345 | 305 | 5.3 | 4.9 | 4.1 | 4.9 | 4.6 | 3.9 | 4.6 | 4.5 | 3.8 | 4.3 | 4.3 | 3.6 | 4.1 | 4.1 | 3.5 | 3.9 | 3.9 | 3.4 |
| | 345 | 406 | 4.5 | 4.4 | 3.7 | 4.2 | 4.2 | 3.6 | 3.9 | 3.9 | 3.4 | 3.7 | 3.7 | 3.3 | 3.5 | 3.5 | 3.2 | 3.3 | 3.3 | 3.1 |
| | 345 | 610 | 3.6 | 3.6 | 3.3 | 3.3 | 3.3 | 3.1 | 3.1 | 3.1 | 3.0 | 2.9 | 2.9 | 2.9 | 2.7 | 2.7 | 2.7 | 2.5 | 2.5 | 2.5 |
| **362S162-97** | 345 | 305 | 6.1 | 5.4 | 4.5 | 5.8 | 5.1 | 4.3 | 5.4 | 4.9 | 4.2 | 5.1 | 4.8 | 4.0 | 4.8 | 4.6 | 3.9 | 4.5 | 4.5 | 3.8 |
| | 345 | 406 | 5.3 | 4.9 | 4.1 | 4.9 | 4.7 | 3.9 | 4.5 | 4.5 | 3.8 | 4.2 | 4.2 | 3.6 | 3.9 | 3.9 | 3.5 | 3.7 | 3.7 | 3.4 |
| | 345 | 610 | 4.0 | 4.0 | 3.6 | 3.7 | 3.7 | 3.4 | 3.4 | 3.4 | 3.3 | 3.1 | 3.1 | 3.1 | 2.9 | 2.9 | 2.9 | 2.7 | 2.7 | 2.7 |
| **362S200-33** | 230 | 305 | 3.0i | 3.0i | 3.0i | 2.8i | 2.8i | 2.8i | 2.6i | 2.6i | 2.6i | 2.5i | 2.5i | 2.5i | 2.3i | 2.3i | 2.3i | 2.2i | 2.2i | 2.2i |
| | 230 | 406 | 2.6i | 2.6i | 2.6i | 2.4i | 2.4i | 2.4i | 2.2i | 2.2i | 2.2i | 2.1i | 2.1i | 2.1i | 2.0i | 2.0i | 2.0i | 1.9i | 1.9i | 1.9i |
| | 230 | 610 | 2.0i | 2.0i | 2.0i | 1.9i | 1.9i | 1.9i | 1.7i | 1.7i | 1.7i | 1.6i | 1.6i | 1.6i | 1.5i | 1.5i | 1.5i | 1.4i | 1.4i | 1.4i |
| **362S200-43** | 230 | 305 | 3.7 | 3.7 | 3.7 | 3.4 | 3.4 | 3.4 | 3.2 | 3.2 | 3.2 | 3.0 | 3.0 | 3.0 | 2.9 | 2.9 | 2.9 | 2.7i | 2.7i | 2.7i |
| | 230 | 406 | 3.1 | 3.1 | 3.1 | 2.9 | 2.9 | 2.9 | 2.7i | 2.7i | 2.7i | 2.5i | 2.5i | 2.5i | 2.4i | 2.4i | 2.4i | 2.3i | 2.3i | 2.3i |
| | 230 | 610 | 2.5i | 2.5i | 2.5i | 2.3i | 2.3i | 2.3i | 2.1i | 2.1i | 2.1i | 2.0i | 2.0i | 2.0i | 1.9i | 1.9i | 1.9i | 1.8i | 1.8i | 1.8i |
| **362S200-54** | 345 | 305 | 4.9 | 4.8 | 4.0 | 4.6 | 4.6 | 3.9 | 4.3 | 4.3 | 3.7 | 4.1 | 4.1 | 3.6 | 3.8 | 3.8 | 3.5 | 3.7 | 3.7 | 3.4 |
| | 345 | 406 | 4.2 | 4.2 | 3.7 | 3.9 | 3.9 | 3.5 | 3.7 | 3.7 | 3.4 | 3.4 | 3.4 | 3.3 | 3.3 | 3.3 | 3.2 | 3.1 | 3.1 | 3.1 |
| | 345 | 610 | 3.3 | 3.3 | 3.2 | 3.1 | 3.1 | 3.1 | 2.9 | 2.9 | 2.9 | 2.7 | 2.7 | 2.7 | 2.5 | 2.5 | 2.5 | 2.4 | 2.4 | 2.4 |
| **362S200-68** | 345 | 305 | 5.7 | 5.1 | 4.3 | 5.3 | 4.9 | 4.1 | 4.9 | 4.7 | 4.0 | 4.6 | 4.6 | 3.8 | 4.4 | 4.4 | 3.7 | 4.1 | 4.1 | 3.6 |
| | 345 | 406 | 4.8 | 4.7 | 3.9 | 4.5 | 4.5 | 3.8 | 4.1 | 4.1 | 3.6 | 3.9 | 3.9 | 3.5 | 3.7 | 3.7 | 3.4 | 3.5 | 3.5 | 3.3 |
| | 345 | 610 | 3.8 | 3.8 | 3.4 | 3.5 | 3.5 | 3.3 | 3.2 | 3.2 | 3.2 | 3.0 | 3.0 | 3.0 | 2.8 | 2.8 | 2.8 | 2.7 | 2.7 | 2.7 |
| **362S200-97** | 345 | 305 | 6.5 | 5.7 | 4.8 | 6.2 | 5.4 | 4.6 | 5.7 | 5.2 | 4.4 | 5.3 | 5.0 | 4.3 | 5.0 | 4.9 | 4.1 | 4.7 | 4.7 | 4.0 |
| | 345 | 406 | 5.6 | 5.2 | 4.4 | 5.1 | 4.9 | 4.2 | 4.7 | 4.7 | 4.0 | 4.4 | 4.4 | 3.9 | 4.1 | 4.1 | 3.7 | 3.8 | 3.8 | 3.6 |
| | 345 | 610 | 4.2 | 4.2 | 3.8 | 3.8 | 3.8 | 3.6 | 3.5 | 3.5 | 3.5 | 3.2 | 3.2 | 3.2 | 3.0 | 3.0 | 3.0 | 2.8 | 2.8 | 2.8 |
| **362S250-33** | 230 | 305 | 3.1i | 3.1i | 3.1i | 2.9i | 2.9i | 2.9i | 2.7i | 2.7i | 2.7i | 2.5i | 2.5i | 2.5i | 2.4i | 2.4i | 2.4i | 2.3i | 2.3i | 2.3i |
| | 230 | 406 | 2.7i | 2.7i | 2.7i | 2.5i | 2.5i | 2.5i | 2.3i | 2.3i | 2.3i | 2.1i | 2.1i | 2.1i | 2.0i | 2.0i | 2.0i | 1.9i | 1.9i | 1.9i |
| | 230 | 610 | 2.1i | 2.1i | 2.1i | 1.9i | 1.9i | 1.9i | 1.8i | 1.8i | 1.8i | 1.6i | 1.6i | 1.6i | 1.5i | 1.5i | 1.5i | 1.4i | 1.4i | 1.4i |
| **362S250-43** | 230 | 305 | 3.8 | 3.8 | 3.8 | 3.5 | 3.5 | 3.5 | 3.3 | 3.3 | 3.3 | 3.1 | 3.1 | 3.1 | 2.9 | 2.9 | 2.9 | 2.8i | 2.8i | 2.8i |
| | 230 | 406 | 3.2 | 3.2 | 3.2 | 3.0 | 3.0 | 3.0 | 2.8i | 2.8i | 2.8i | 2.6i | 2.6i | 2.6i | 2.5i | 2.5i | 2.5i | 2.3i | 2.3i | 2.3i |
| | 230 | 610 | 2.5i | 2.5i | 2.5i | 2.3i | 2.3i | 2.3i | 2.2i | 2.2i | 2.2i | 2.0i | 2.0i | 2.0i | 1.9i | 1.9i | 1.9i | 1.8i | 1.8i | 1.8i |
| **362S250-54** | 345 | 305 | 5.1 | 5.0 | 4.2 | 4.7 | 4.7 | 4.0 | 4.4 | 4.4 | 3.9 | 4.1 | 4.1 | 3.7 | 3.9 | 3.9 | 3.6 | 3.7 | 3.7 | 3.5 |
| | 345 | 406 | 4.3 | 4.3 | 3.8 | 4.0 | 4.0 | 3.7 | 3.7 | 3.7 | 3.5 | 3.5 | 3.5 | 3.4 | 3.3 | 3.3 | 3.3 | 3.2 | 3.2 | 3.2 |
| | 345 | 610 | 3.4 | 3.4 | 3.3 | 3.2 | 3.2 | 3.2 | 2.9 | 2.9 | 2.9 | 2.8 | 2.8 | 2.8 | 2.6 | 2.6 | 2.6 | 2.4 | 2.4 | 2.4 |
| **362S250-68** | 345 | 305 | 5.8 | 5.4 | 4.6 | 5.3 | 5.2 | 4.4 | 5.0 | 5.0 | 4.2 | 4.7 | 4.7 | 4.1 | 4.4 | 4.4 | 3.9 | 4.2 | 4.2 | 3.8 |
| | 345 | 406 | 4.9 | 4.9 | 4.1 | 4.5 | 4.5 | 4.0 | 4.2 | 4.2 | 3.8 | 3.9 | 3.9 | 3.7 | 3.7 | 3.7 | 3.6 | 3.5 | 3.5 | 3.5 |
| | 345 | 610 | 3.8 | 3.8 | 3.6 | 3.5 | 3.5 | 3.5 | 3.3 | 3.3 | 3.3 | 3.0 | 3.0 | 3.0 | 2.9 | 2.9 | 2.9 | 2.7 | 2.7 | 2.7 |
| **362S250-97** | 345 | 305 | 6.9 | 6.0 | 5.1 | 6.4 | 5.8 | 4.9 | 5.9 | 5.5 | 4.7 | 5.5 | 5.3 | 4.5 | 5.2 | 5.2 | 4.4 | 4.8 | 4.8 | 4.2 |
| | 345 | 406 | 5.8 | 5.5 | 4.6 | 5.3 | 5.2 | 4.4 | 4.8 | 4.8 | 4.2 | 4.5 | 4.5 | 4.1 | 4.2 | 4.2 | 4.0 | 3.9 | 3.9 | 3.9 |
| | 345 | 610 | 4.3 | 4.3 | 4.0 | 3.9 | 3.9 | 3.9 | 3.6 | 3.6 | 3.6 | 3.3 | 3.3 | 3.3 | 3.0 | 3.0 | 3.0 | 2.8 | 2.8 | 2.8 |
| **362S300-33** | 230 | 305 | 3.2i | 3.2i | 3.2i | 3.0i | 3.0i | 3.0i | 2.8i | 2.8i | 2.8i | 2.6i | 2.6i | 2.6i | 2.4i | 2.4i | 2.4i | 2.3i | 2.3i | 2.3i |
| | 230 | 406 | 2.7i | 2.7i | 2.7i | 2.5i | 2.5i | 2.5i | 2.3i | 2.3i | 2.3i | 2.2i | 2.2i | 2.2i | 2.0i | 2.0i | 2.0i | 1.9i | 1.9i | 1.9i |
| | 230 | 610 | 2.1i | 2.1i | 2.1i | 1.9i | 1.9i | 1.9i | 1.8i | 1.8i | 1.8i | 1.7i | 1.7i | 1.7i | 1.6i | 1.6i | 1.6i | 1.5i | 1.5i | 1.5i |
| **362S300-43** | 230 | 305 | 3.8 | 3.8 | 3.8 | 3.5 | 3.5 | 3.5 | 3.3 | 3.3 | 3.3 | 3.1 | 3.1 | 3.1 | 2.9i | 2.9i | 2.9i | 2.8i | 2.8i | 2.8i |
| | 230 | 406 | 3.2 | 3.2 | 3.2 | 3.0 | 3.0 | 3.0 | 2.8i | 2.8i | 2.8i | 2.6i | 2.6i | 2.6i | 2.5i | 2.5i | 2.5i | 2.3i | 2.3i | 2.3i |
| | 230 | 610 | 2.5i | 2.5i | 2.5i | 2.3i | 2.3i | 2.3i | 2.2i | 2.2i | 2.2i | 2.0i | 2.0i | 2.0i | 1.9i | 1.9i | 1.9i | 1.8i | 1.8i | 1.8i |
| **362S300-54** | 345 | 305 | 5.1 | 5.1 | 4.3 | 4.8 | 4.8 | 4.1 | 4.5 | 4.5 | 4.0 | 4.2 | 4.2 | 3.8 | 4.0 | 4.0 | 3.7 | 3.8 | 3.8 | 3.6 |
| | 345 | 406 | 4.4 | 4.4 | 3.9 | 4.0 | 4.0 | 3.8 | 3.8 | 3.8 | 3.6 | 3.6 | 3.6 | 3.5 | 3.4 | 3.4 | 3.4 | 3.2 | 3.2 | 3.2 |
| | 345 | 610 | 3.5 | 3.5 | 3.4 | 3.2 | 3.2 | 3.2 | 3.0 | 3.0 | 3.0 | 2.8 | 2.8 | 2.8 | 2.6 | 2.6 | 2.6 | 2.5 | 2.5 | 2.5 |
| **362S300-68** | 345 | 305 | 5.9 | 5.6 | 4.7 | 5.4 | 5.3 | 4.5 | 5.1 | 5.1 | 4.3 | 4.8 | 4.8 | 4.2 | 4.5 | 4.5 | 4.1 | 4.3 | 4.3 | 3.9 |
| | 345 | 406 | 5.0 | 5.0 | 4.3 | 4.6 | 4.6 | 4.1 | 4.3 | 4.3 | 3.9 | 4.0 | 4.0 | 3.8 | 3.8 | 3.8 | 3.7 | 3.6 | 3.6 | 3.6 |
| | 345 | 610 | 3.9 | 3.9 | 3.7 | 3.6 | 3.6 | 3.6 | 3.3 | 3.3 | 3.3 | 3.1 | 3.1 | 3.1 | 2.9 | 2.9 | 2.9 | 2.7 | 2.7 | 2.7 |
| **362S300-97** | 345 | 305 | 6.9 | 6.3 | 5.3 | 6.3 | 6.0 | 5.1 | 5.9 | 5.8 | 4.9 | 5.5 | 5.5 | 4.7 | 5.1 | 5.1 | 4.6 | 4.8 | 4.8 | 4.4 |
| | 345 | 406 | 5.7 | 5.7 | 4.8 | 5.2 | 5.2 | 4.6 | 4.8 | 4.8 | 4.4 | 4.5 | 4.5 | 4.3 | 4.2 | 4.2 | 4.1 | 3.9 | 3.9 | 3.9 |
| | 345 | 610 | 4.3 | 4.3 | 4.2 | 3.9 | 3.9 | 3.9 | 3.5 | 3.5 | 3.5 | 3.3 | 3.3 | 3.3 | 3.0 | 3.0 | 3.0 | 2.8 | 2.8 | 2.8 |

**NOTES:**

1) $p = I_w \{qC_eC_gC_p\}$; $I_w$ of 0.75 has been incorpotated in the deflection values of the table.
The parameters in the bracket { } must be determined by the design professional in accordance with the NBCC.

2) "e" web stiffeners required at ends; "i" web stiffeners required at interior support; "a" web stiffeners required at ends and interior supports.

Bailey Metal Products, Dass Metal Products, DCM Metal Corp., EB Métal Inc., Imperial Building Products, Manugypse, Groupe UP, Trebor Building Products Ltd.

## DOUBLE SPAN CURTAIN WALL LIMITING HEIGHTS (m)

| Stud Designation | Specified Loads $F_y$ (MPa) | Spacing (mm) | 1.75 kPa | | | 2.00 kPa | | | 2.25 kPa | | | 2.50 kPa | | | 2.75 kPa | | | 3.00 kPa | | |
|---|---|---|---|---|---|---|---|---|---|---|---|---|---|---|---|---|---|---|---|---|
| | | | L/240 | L/360 | L/600 | L/240 | L/360 | L/600 | L/240 | L/360 | L/600 | L/240 | L/360 | L/600 | L/240 | L/360 | L/600 | L/240 | L/360 | L/600 |
| **400S125-33** | 230 | 305 | 2.6 | 2.6 | 2.6 | 2.4i | 2.4i | 2.4i | 2.3i | 2.3i | 2.3i | 2.1i | 2.1i | 2.1i | 2.0i | 2.0i | 2.0i | 1.9i | 1.9i | 1.9i |
| | 230 | 406 | 2.2i | 2.2i | 2.2i | 2.1i | 2.1i | 2.1i | 1.9i | 1.9i | 1.9i | 1.8i | 1.8i | 1.8i | 1.7i | 1.7i | 1.7i | 1.7i | 1.7i | 1.7i |
| | 230 | 610 | 1.8i | 1.8i | 1.8i | 1.7i | 1.7i | 1.7i | 1.5i | 1.5i | 1.5i | 1.4i | 1.4i | 1.4i | 1.4i | 1.4i | 1.4i | 1.3i | 1.3i | 1.3i |
| **400S125-43** | 230 | 305 | 3.1 | 3.1 | 3.1 | 2.9 | 2.9 | 2.9 | 2.7 | 2.7 | 2.7 | 2.6 | 2.6 | 2.6 | 2.5 | 2.5 | 2.5 | 2.4 | 2.4 | 2.4 |
| | 230 | 406 | 2.7 | 2.7 | 2.7 | 2.5 | 2.5 | 2.5 | 2.4 | 2.4 | 2.4 | 2.2 | 2.2 | 2.2 | 2.1 | 2.1 | 2.1 | 2.0i | 2.0i | 2.0i |
| | 230 | 610 | 2.2 | 2.2 | 2.2 | 2.0i | 2.0i | 2.0i | 1.9i | 1.9i | 1.9i | 1.8i | 1.8i | 1.8i | 1.7i | 1.7i | 1.7i | 1.6i | 1.6i | 1.6i |
| **400S125-54** | 345 | 305 | 4.1 | 4.1 | 3.8 | 3.9 | 3.9 | 3.6 | 3.6 | 3.6 | 3.5 | 3.5 | 3.5 | 3.3 | 3.3 | 3.3 | 3.2 | 3.2 | 3.2 | 3.1 |
| | 345 | 406 | 3.6 | 3.6 | 3.4 | 3.3 | 3.3 | 3.3 | 3.2 | 3.2 | 3.1 | 3.0 | 3.0 | 3.0 | 2.9 | 2.9 | 2.9 | 2.7 | 2.7 | 2.7 |
| | 345 | 610 | 2.9 | 2.9 | 2.9 | 2.7 | 2.7 | 2.7 | 2.6 | 2.6 | 2.6 | 2.4 | 2.4 | 2.4 | 2.3 | 2.3 | 2.3 | 2.2 | 2.2 | 2.2 |
| **400S162-33** | 230 | 305 | 3.1i | 3.1i | 3.1i | 2.9i | 2.9i | 2.9i | 2.7i | 2.7i | 2.7i | 2.5i | 2.5i | 2.5i | 2.4i | 2.4i | 2.4i | 2.3i | 2.3i | 2.3i |
| | 230 | 406 | 2.7i | 2.7i | 2.7i | 2.5i | 2.5i | 2.5i | 2.3i | 2.3i | 2.3i | 2.2i | 2.2i | 2.2i | 2.0i | 2.0i | 2.0i | 1.9i | 1.9i | 1.9i |
| | 230 | 610 | 2.1i | 2.1i | 2.1i | 1.9i | 1.9i | 1.9i | 1.8i | 1.8i | 1.8i | 1.7i | 1.7i | 1.7i | 1.6i | 1.6i | 1.6i | 1.5i | 1.5i | 1.5i |
| **400S162-43** | 230 | 305 | 3.7 | 3.7 | 3.7 | 3.5 | 3.5 | 3.5 | 3.2 | 3.2 | 3.2 | 3.1 | 3.1 | 3.1 | 2.9 | 2.9 | 2.9 | 2.8i | 2.8i | 2.8i |
| | 230 | 406 | 3.2 | 3.2 | 3.2 | 3.0 | 3.0 | 3.0 | 2.8i | 2.8i | 2.8i | 2.6i | 2.6i | 2.6i | 2.5i | 2.5i | 2.5i | 2.3i | 2.3i | 2.3i |
| | 230 | 610 | 2.5i | 2.5i | 2.5i | 2.3i | 2.3i | 2.3i | 2.2i | 2.2i | 2.2i | 2.1i | 2.1i | 2.1i | 1.9i | 1.9i | 1.9i | 1.8i | 1.8i | 1.8i |
| **400S162-54** | 345 | 305 | 5.0 | 4.9 | 4.1 | 4.7 | 4.7 | 4.0 | 4.4 | 4.4 | 3.8 | 4.2 | 4.2 | 3.7 | 4.0 | 4.0 | 3.6 | 3.8 | 3.8 | 3.5 |
| | 345 | 406 | 4.3 | 4.3 | 3.8 | 4.0 | 4.0 | 3.6 | 3.8 | 3.8 | 3.5 | 3.6 | 3.6 | 3.3 | 3.4 | 3.4 | 3.2 | 3.2 | 3.2 | 3.1 |
| | 345 | 610 | 3.5 | 3.5 | 3.3 | 3.2 | 3.2 | 3.1 | 3.0 | 3.0 | 3.0 | 2.8 | 2.8 | 2.8 | 2.7 | 2.7 | 2.7 | 2.5 | 2.5 | 2.5 |
| **400S162-68** | 345 | 305 | 5.8 | 5.2 | 4.4 | 5.4 | 5.0 | 4.2 | 5.0 | 4.8 | 4.1 | 4.7 | 4.7 | 3.9 | 4.5 | 4.5 | 3.8 | 4.3 | 4.3 | 3.7 |
| | 345 | 406 | 4.9 | 4.8 | 4.0 | 4.6 | 4.6 | 3.8 | 4.3 | 4.3 | 3.7 | 4.0 | 4.0 | 3.6 | 3.8 | 3.8 | 3.5 | 3.7 | 3.7 | 3.4 |
| | 345 | 610 | 3.9 | 3.9 | 3.5 | 3.7 | 3.7 | 3.4 | 3.4 | 3.4 | 3.2 | 3.2 | 3.2 | 3.1 | 3.0 | 3.0 | 3.0 | 2.9 | 2.9 | 2.9 |
| **400S162-97** | 345 | 305 | 6.6 | 5.8 | 4.9 | 6.3 | 5.5 | 4.7 | 6.1 | 5.3 | 4.5 | 5.8 | 5.1 | 4.3 | 5.5 | 5.0 | 4.2 | 5.2 | 4.8 | 4.1 |
| | 345 | 406 | 6.0 | 5.3 | 4.4 | 5.6 | 5.0 | 4.2 | 5.2 | 4.8 | 4.1 | 4.9 | 4.7 | 3.9 | 4.6 | 4.5 | 3.8 | 4.3 | 4.3 | 3.7 |
| | 345 | 610 | 4.7 | 4.6 | 3.9 | 4.3 | 4.3 | 3.7 | 4.0 | 4.0 | 3.6 | 3.7 | 3.7 | 3.4 | 3.5 | 3.5 | 3.3 | 3.3 | 3.3 | 3.2 |
| **400S200-33** | 230 | 305 | 3.2i | 3.2i | 3.2i | 3.0i | 3.0i | 3.0i | 2.8i | 2.8i | 2.8i | 2.7i | 2.7i | 2.7i | 2.5i | 2.5i | 2.5i | 2.4i | 2.4i | 2.4i |
| | 230 | 406 | 2.8i | 2.8i | 2.8i | 2.6i | 2.6i | 2.6i | 2.4i | 2.4i | 2.4i | 2.2i | 2.2i | 2.2i | 2.1i | 2.1i | 2.1i | 2.0i | 2.0i | 2.0i |
| | 230 | 610 | 2.2i | 2.2i | 2.2i | 2.0i | 2.0i | 2.0i | 1.9i | 1.9i | 1.9i | 1.7i | 1.7i | 1.7i | 1.6i | 1.6i | 1.6i | 1.5i | 1.5i | 1.5i |
| **400S200-43** | 230 | 305 | 4.0 | 4.0 | 4.0 | 3.7 | 3.7 | 3.7 | 3.5 | 3.5 | 3.5 | 3.3i | 3.3i | 3.3i | 3.1i | 3.1i | 3.1i | 2.9i | 2.9i | 2.9i |
| | 230 | 406 | 3.4 | 3.4 | 3.4 | 3.1i | 3.1i | 3.1i | 2.9i | 2.9i | 2.9i | 2.8i | 2.8i | 2.8i | 2.6i | 2.6i | 2.6i | 2.5i | 2.5i | 2.5i |
| | 230 | 610 | 2.7i | 2.7i | 2.7i | 2.5i | 2.5i | 2.5i | 2.3i | 2.3i | 2.3i | 2.2i | 2.2i | 2.2i | 2.0i | 2.0i | 2.0i | 1.9i | 1.9i | 1.9i |
| **400S200-54** | 345 | 305 | 5.3 | 5.2 | 4.4 | 4.9 | 4.9 | 4.2 | 4.6 | 4.6 | 4.0 | 4.4 | 4.4 | 3.9 | 4.1 | 4.1 | 3.8 | 3.9 | 3.9 | 3.6 |
| | 345 | 406 | 4.5 | 4.5 | 4.0 | 4.2 | 4.2 | 3.8 | 3.9 | 3.9 | 3.6 | 3.7 | 3.7 | 3.5 | 3.5 | 3.5 | 3.4 | 3.3 | 3.3 | 3.3 |
| | 345 | 610 | 3.6 | 3.6 | 3.5 | 3.3 | 3.3 | 3.3 | 3.1 | 3.1 | 3.1 | 2.9 | 2.9 | 2.9 | 2.8 | 2.8 | 2.8 | 2.6 | 2.6 | 2.6 |
| **400S200-68** | 345 | 305 | 6.2 | 5.5 | 4.7 | 5.7 | 5.3 | 4.5 | 5.4 | 5.1 | 4.3 | 5.1 | 4.9 | 4.2 | 4.8 | 4.8 | 4.0 | 4.6 | 4.6 | 3.9 |
| | 345 | 406 | 5.3 | 5.0 | 4.2 | 4.9 | 4.8 | 4.1 | 4.6 | 4.6 | 3.9 | 4.3 | 4.3 | 3.8 | 4.1 | 4.1 | 3.7 | 3.9 | 3.9 | 3.6 |
| | 345 | 610 | 4.2 | 4.2 | 3.7 | 3.9 | 3.9 | 3.6 | 3.6 | 3.6 | 3.4 | 3.4 | 3.4 | 3.3 | 3.2 | 3.2 | 3.2 | 3.0 | 3.0 | 3.0 |
| **400S200-97** | 345 | 305 | 7.0 | 6.1 | 5.2 | 6.7 | 5.9 | 5.0 | 6.5 | 5.6 | 4.8 | 6.1 | 5.4 | 4.6 | 5.8 | 5.3 | 4.5 | 5.5 | 5.1 | 4.3 |
| | 345 | 406 | 6.4 | 5.6 | 4.7 | 5.9 | 5.3 | 4.5 | 5.5 | 5.1 | 4.3 | 5.1 | 5.0 | 4.2 | 4.8 | 4.8 | 4.0 | 4.5 | 4.5 | 3.9 |
| | 345 | 610 | 5.0 | 4.9 | 4.1 | 4.5 | 4.5 | 3.9 | 4.2 | 4.2 | 3.8 | 3.9 | 3.9 | 3.6 | 3.6 | 3.6 | 3.5 | 3.4 | 3.4 | 3.4 |
| **400S250-33** | 230 | 305 | 3.3i | 3.3i | 3.3i | 3.1i | 3.1i | 3.1i | 2.9i | 2.9i | 2.9i | 2.7i | 2.7i | 2.7i | 2.6i | 2.6i | 2.6i | 2.5i | 2.5i | 2.5i |
| | 230 | 406 | 2.8i | 2.8i | 2.8i | 2.6i | 2.6i | 2.6i | 2.5i | 2.5i | 2.5i | 2.3i | 2.3i | 2.3i | 2.2i | 2.2i | 2.2i | 2.1i | 2.1i | 2.1i |
| | 230 | 610 | 2.2i | 2.2i | 2.2i | 2.1i | 2.1i | 2.1i | 1.9i | 1.9i | 1.9i | 1.8i | 1.8i | 1.8i | 1.7i | 1.7i | 1.7i | 1.6i | 1.6i | 1.6i |
| **400S250-43** | 230 | 305 | 4.1 | 4.1 | 4.1 | 3.8 | 3.8 | 3.8 | 3.5 | 3.5 | 3.5 | 3.3i | 3.3i | 3.3i | 3.2i | 3.2i | 3.2i | 3.0i | 3.0i | 3.0i |
| | 230 | 406 | 3.5i | 3.5i | 3.5i | 3.2i | 3.2i | 3.2i | 3.0i | 3.0i | 3.0i | 2.8i | 2.8i | 2.8i | 2.7i | 2.7i | 2.7i | 2.5i | 2.5i | 2.5i |
| | 230 | 610 | 2.7i | 2.7i | 2.7i | 2.5i | 2.5i | 2.5i | 2.4i | 2.4i | 2.4i | 2.2i | 2.2i | 2.2i | 2.1i | 2.1i | 2.1i | 2.0i | 2.0i | 2.0i |
| **400S250-54** | 345 | 305 | 5.4 | 5.4 | 4.5 | 5.0 | 5.0 | 4.3 | 4.7 | 4.7 | 4.2 | 4.5 | 4.5 | 4.0 | 4.2 | 4.2 | 3.9 | 4.0 | 4.0 | 3.8 |
| | 345 | 406 | 4.6 | 4.6 | 4.1 | 4.3 | 4.3 | 3.9 | 4.0 | 4.0 | 3.8 | 3.8 | 3.8 | 3.7 | 3.6 | 3.6 | 3.5 | 3.4 | 3.4 | 3.4 |
| | 345 | 610 | 3.7 | 3.7 | 3.6 | 3.4 | 3.4 | 3.4 | 3.2 | 3.2 | 3.2 | 3.0 | 3.0 | 3.0 | 2.8 | 2.8 | 2.8 | 2.7 | 2.7 | 2.7 |
| **400S250-68** | 345 | 305 | 6.2 | 5.8 | 4.9 | 5.8 | 5.6 | 4.7 | 5.5 | 5.4 | 4.5 | 5.1 | 5.1 | 4.4 | 4.9 | 4.9 | 4.2 | 4.6 | 4.6 | 4.1 |
| | 345 | 406 | 5.3 | 5.3 | 4.5 | 5.0 | 5.0 | 4.3 | 4.6 | 4.6 | 4.1 | 4.4 | 4.4 | 4.0 | 4.1 | 4.1 | 3.8 | 3.9 | 3.9 | 3.7 |
| | 345 | 610 | 4.3 | 4.3 | 3.9 | 3.9 | 3.9 | 3.7 | 3.7 | 3.7 | 3.6 | 3.4 | 3.4 | 3.4 | 3.2 | 3.2 | 3.2 | 3.1 | 3.1 | 3.1 |
| **400S250-97** | 345 | 305 | 7.4 | 6.5 | 5.5 | 7.1 | 6.2 | 5.2 | 6.8 | 6.0 | 5.0 | 6.3 | 5.8 | 4.9 | 6.0 | 5.6 | 4.7 | 5.7 | 5.4 | 4.6 |
| | 345 | 406 | 6.6 | 5.9 | 5.0 | 6.1 | 5.6 | 4.8 | 5.7 | 5.4 | 4.6 | 5.3 | 5.2 | 4.4 | 5.0 | 5.0 | 4.3 | 4.7 | 4.7 | 4.2 |
| | 345 | 610 | 5.1 | 5.1 | 4.3 | 4.7 | 4.7 | 4.2 | 4.3 | 4.3 | 4.0 | 4.0 | 4.0 | 3.9 | 3.7 | 3.7 | 3.7 | 3.5 | 3.5 | 3.5 |
| **400S300-33** | 230 | 305 | 3.4i | 3.4i | 3.4i | 3.2i | 3.2i | 3.2i | 3.0i | 3.0i | 3.0i | 2.8i | 2.8i | 2.8i | 2.6i | 2.6i | 2.6i | 2.5i | 2.5i | 2.5i |
| | 230 | 406 | 2.9i | 2.9i | 2.9i | 2.7i | 2.7i | 2.7i | 2.5i | 2.5i | 2.5i | 2.3i | 2.3i | 2.3i | 2.2i | 2.2i | 2.2i | 2.1i | 2.1i | 2.1i |
| | 230 | 610 | 2.3i | 2.3i | 2.3i | 2.1i | 2.1i | 2.1i | 1.9i | 1.9i | 1.9i | 1.8i | 1.8i | 1.8i | 1.7i | 1.7i | 1.7i | 1.6i | 1.6i | 1.6i |
| **400S300-43** | 230 | 305 | 4.1 | 4.1 | 4.1 | 3.8 | 3.8 | 3.8 | 3.6 | 3.6 | 3.6 | 3.4i | 3.4i | 3.4i | 3.2i | 3.2i | 3.2i | 3.0i | 3.0i | 3.0i |
| | 230 | 406 | 3.5i | 3.5i | 3.5i | 3.2i | 3.2i | 3.2i | 3.0i | 3.0i | 3.0i | 2.8i | 2.8i | 2.8i | 2.7i | 2.7i | 2.7i | 2.6i | 2.6i | 2.6i |
| | 230 | 610 | 2.8i | 2.8i | 2.8i | 2.6i | 2.6i | 2.6i | 2.4i | 2.4i | 2.4i | 2.2i | 2.2i | 2.2i | 2.1i | 2.1i | 2.1i | 2.0i | 2.0i | 2.0i |
| **400S300-54** | 345 | 305 | 5.5 | 5.5 | 4.7 | 5.1 | 5.1 | 4.5 | 4.8 | 4.8 | 4.3 | 4.5 | 4.5 | 4.1 | 4.3 | 4.3 | 4.0 | 4.1 | 4.1 | 3.9 |
| | 345 | 406 | 4.7 | 4.7 | 4.2 | 4.4 | 4.4 | 4.0 | 4.1 | 4.1 | 3.9 | 3.8 | 3.8 | 3.8 | 3.6 | 3.6 | 3.6 | 3.5 | 3.5 | 3.5 |
| | 345 | 610 | 3.7 | 3.7 | 3.7 | 3.5 | 3.5 | 3.5 | 3.2 | 3.2 | 3.2 | 3.0 | 3.0 | 3.0 | 2.9 | 2.9 | 2.9 | 2.7 | 2.7 | 2.7 |
| **400S300-68** | 345 | 305 | 6.4 | 6.0 | 5.1 | 5.9 | 5.7 | 4.8 | 5.5 | 5.5 | 4.7 | 5.2 | 5.2 | 4.5 | 5.0 | 5.0 | 4.4 | 4.7 | 4.7 | 4.2 |
| | 345 | 406 | 5.4 | 5.4 | 4.6 | 5.0 | 5.0 | 4.4 | 4.7 | 4.7 | 4.2 | 4.4 | 4.4 | 4.1 | 4.2 | 4.2 | 4.0 | 4.0 | 4.0 | 3.8 |
| | 345 | 610 | 4.3 | 4.3 | 4.0 | 4.0 | 4.0 | 3.8 | 3.7 | 3.7 | 3.7 | 3.5 | 3.5 | 3.5 | 3.3 | 3.3 | 3.3 | 3.1 | 3.1 | 3.1 |
| **400S300-97** | 345 | 305 | 7.7 | 6.8 | 5.7 | 7.2 | 6.5 | 5.5 | 6.7 | 6.2 | 5.2 | 6.3 | 6.0 | 5.1 | 5.9 | 5.8 | 4.9 | 5.6 | 5.6 | 4.8 |
| | 345 | 406 | 6.6 | 6.1 | 5.2 | 6.0 | 5.9 | 5.0 | 5.6 | 5.6 | 4.8 | 5.2 | 5.2 | 4.6 | 4.9 | 4.9 | 4.5 | 4.6 | 4.6 | 4.3 |
| | 345 | 610 | 5.1 | 5.1 | 4.5 | 4.6 | 4.6 | 4.3 | 4.3 | 4.3 | 4.2 | 4.0 | 4.0 | 4.0 | 3.7 | 3.7 | 3.7 | 3.5 | 3.5 | 3.5 |

**NOTES:**

1) $p = I_w \{qC_eC_gC_p\}$; $I_w$ of 0.75 has been incorpotated in the deflection values of the table.
The parameters in the bracket { } must be determined by the design professional in accordance with the NBCC.

2) "e" web stiffeners required at ends; "i" web stiffeners required at interior support; "a" web stiffeners required at ends and interior supports.

Bailey Metal Products, Dass Metal Products, DCM Metal Corp., EB Métal Inc., Imperial Building Products, Manugypse, Groupe UP, Trebor Building Products Ltd.

## DOUBLE SPAN CURTAIN WALL LIMITING HEIGHTS (m)

| Stud Designation | Specified Loads $F_y$ (MPa) | Spacing (mm) | 1.75 kPa | | | 2.00 kPa | | | 2.25 kPa | | | 2.50 kPa | | | 2.75 kPa | | | 3.00 kPa | | |
|---|---|---|---|---|---|---|---|---|---|---|---|---|---|---|---|---|---|---|---|---|
| | | | L/240 | L/360 | L/600 | L/240 | L/360 | L/600 | L/240 | L/360 | L/600 | L/240 | L/360 | L/600 | L/240 | L/360 | L/600 | L/240 | L/360 | L/600 |
| **600S125-33** | 230 | 305 | 3.2i | 3.2i | 3.2i | 3.0i | 3.0i | 3.0i | 2.8i | 2.8i | 2.8i | 2.7i | 2.7i | 2.7i | 2.6i | 2.6i | 2.6i | 2.5i | 2.5i | 2.5i |
| | 230 | 406 | 2.8i | 2.8i | 2.8i | 2.6i | 2.6i | 2.6i | 2.5i | 2.5i | 2.5i | 2.3i | 2.3i | 2.3i | 2.2i | 2.2i | 2.2i | 2.1i | 2.1i | 2.1i |
| | 230 | 610 | 2.3i | 2.3i | 2.3i | 2.1i | 2.1i | 2.1i | 2.0i | 2.0i | 2.0i | 1.8a | 1.8a | 1.8a | 1.7a | 1.7a | 1.7a | 1.6a | 1.6a | 1.6a |
| **600S125-43** | 230 | 305 | 3.9 | 3.9 | 3.9 | 3.7 | 3.7 | 3.7 | 3.5 | 3.5 | 3.5 | 3.3i | 3.3i | 3.3i | 3.1i | 3.1i | 3.1i | 3.0i | 3.0i | 3.0i |
| | 230 | 406 | 3.4i | 3.4i | 3.4i | 3.2i | 3.2i | 3.2i | 3.0i | 3.0i | 3.0i | 2.8i | 2.8i | 2.8i | 2.7i | 2.7i | 2.7i | 2.6i | 2.6i | 2.6i |
| | 230 | 610 | 2.8i | 2.8i | 2.8i | 2.6i | 2.6i | 2.6i | 2.4i | 2.4i | 2.4i | 2.3i | 2.3i | 2.3i | 2.2i | 2.2i | 2.2i | 2.1i | 2.1i | 2.1i |
| **600S125-54** | 345 | 305 | 5.3 | 5.3 | 5.2 | 4.9 | 4.9 | 4.9 | 4.6 | 4.6 | 4.6 | 4.4 | 4.4 | 4.4 | 4.2 | 4.2 | 4.2 | 4.0 | 4.0 | 4.0 |
| | 345 | 406 | 4.6 | 4.6 | 4.6 | 4.3 | 4.3 | 4.3 | 4.0 | 4.0 | 4.0 | 3.8 | 3.8 | 3.8 | 3.6 | 3.6 | 3.6 | 3.5 | 3.5 | 3.5 |
| | 345 | 610 | 3.7 | 3.7 | 3.7 | 3.5 | 3.5 | 3.5 | 3.3 | 3.3 | 3.3 | 3.1 | 3.1 | 3.1 | 3.0 | 3.0 | 3.0 | 2.8 | 2.8 | 2.8 |
| **600S162-33** | 230 | 305 | 4.1i | 4.1i | 4.1i | 3.8i | 3.8i | 3.8i | 3.6i | 3.6i | 3.6i | 3.4i | 3.4i | 3.4i | 3.2i | 3.2i | 3.2i | 3.0a | 3.0a | 3.0a |
| | 230 | 406 | 3.5i | 3.5i | 3.5i | 3.2i | 3.2i | 3.2i | 3.0a | 3.0a | 3.0a | 2.8a | 2.8a | 2.8a | 2.6a | 2.6a | 2.6a | 2.5a | 2.5a | 2.5a |
| | 230 | 610 | 2.7a | 2.7a | 2.7a | 2.5a | 2.5a | 2.5a | 2.3a | 2.3a | 2.3a | 2.1a | 2.1a | 2.1a | 2.0a | 2.0a | 2.0a | 1.9a | 1.9a | 1.9a |
| **600S162-43** | 230 | 305 | 4.9i | 4.9i | 4.9i | 4.5i | 4.5i | 4.5i | 4.3i | 4.3i | 4.3i | 4.1i | 4.1i | 4.1i | 3.9i | 3.9i | 3.9i | 3.7i | 3.7i | 3.7i |
| | 230 | 406 | 4.2i | 4.2i | 4.2i | 3.9i | 3.9i | 3.9i | 3.7i | 3.7i | 3.7i | 3.5i | 3.5i | 3.5i | 3.4i | 3.4i | 3.4i | 3.2i | 3.2i | 3.2i |
| | 230 | 610 | 3.4i | 3.4i | 3.4i | 3.2i | 3.2i | 3.2i | 3.0i | 3.0i | 3.0i | 2.9i | 2.9i | 2.9i | 2.7i | 2.7i | 2.7i | 2.6a | 2.6a | 2.6a |
| **600S162-54** | 345 | 305 | 6.5 | 6.5 | 5.7 | 6.1 | 6.1 | 5.4 | 5.7 | 5.7 | 5.2 | 5.4 | 5.4 | 5.1 | 5.2 | 5.2 | 4.9 | 4.9 | 4.9 | 4.8 |
| | 345 | 406 | 5.6 | 5.6 | 5.2 | 5.2 | 5.2 | 4.9 | 4.9 | 4.9 | 4.8 | 4.7 | 4.7 | 4.6 | 4.5 | 4.5 | 4.4 | 4.3 | 4.3 | 4.3 |
| | 345 | 610 | 4.6 | 4.6 | 4.5 | 4.3 | 4.3 | 4.3 | 4.0i | 4.0i | 4.0i | 3.8i | 3.8i | 3.8i | 3.6i | 3.6i | 3.6i | 3.5i | 3.5i | 3.5i |
| **600S162-68** | 345 | 305 | 7.5 | 7.2 | 6.1 | 7.0 | 6.9 | 5.8 | 6.6 | 6.6 | 5.6 | 6.3 | 6.3 | 5.4 | 6.0 | 6.0 | 5.2 | 5.7 | 5.7 | 5.1 |
| | 345 | 406 | 6.5 | 6.5 | 5.5 | 6.1 | 6.1 | 5.3 | 5.7 | 5.7 | 5.1 | 5.4 | 5.4 | 4.9 | 5.2 | 5.2 | 4.8 | 5.0 | 5.0 | 4.6 |
| | 345 | 610 | 5.3 | 5.3 | 4.8 | 5.0 | 5.0 | 4.6 | 4.7 | 4.7 | 4.5 | 4.4 | 4.4 | 4.3 | 4.2 | 4.2 | 4.2 | 4.1 | 4.1 | 4.0 |
| **600S162-97** | 345 | 305 | 9.2 | 8.0 | 6.8 | 8.7 | 7.7 | 6.5 | 8.2 | 7.4 | 6.2 | 7.8 | 7.1 | 6.0 | 7.4 | 6.9 | 5.8 | 7.1 | 6.7 | 5.6 |
| | 345 | 406 | 8.1 | 7.3 | 6.1 | 7.5 | 7.0 | 5.9 | 7.1 | 6.7 | 5.6 | 6.7 | 6.5 | 5.5 | 6.4 | 6.3 | 5.3 | 6.1 | 6.1 | 5.1 |
| | 345 | 610 | 6.6 | 6.4 | 5.4 | 6.1 | 6.1 | 5.1 | 5.8 | 5.8 | 4.9 | 5.5 | 5.5 | 4.8 | 5.2 | 5.2 | 4.6 | 5.0 | 5.0 | 4.5 |
| **600S200-33** | 230 | 305 | 4.3i | 4.3i | 4.3i | 4.0i | 4.0i | 4.0i | 3.7i | 3.7i | 3.7i | 3.5i | 3.5i | 3.5i | 3.3i | 3.3i | 3.3i | 3.1a | 3.1a | 3.1a |
| | 230 | 406 | 3.6i | 3.6i | 3.6i | 3.3i | 3.3i | 3.3i | 3.1a | 3.1a | 3.1a | 2.9a | 2.9a | 2.9a | 2.7a | 2.7a | 2.7a | 2.5a | 2.5a | 2.5a |
| | 230 | 610 | 2.8a | 2.8a | 2.8a | 2.5a | 2.5a | 2.5a | 2.3a | 2.3a | 2.3a | 2.2a | 2.2a | 2.2a | 2.0a | 2.0a | 2.0a | 1.9a | 1.9a | 1.9a |
| **600S200-43** | 230 | 305 | 5.2i | 5.2i | 5.2i | 4.9i | 4.9i | 4.9i | 4.6i | 4.6i | 4.6i | 4.4i | 4.4i | 4.4i | 4.1i | 4.1i | 4.1i | 4.0i | 4.0i | 4.0i |
| | 230 | 406 | 4.5i | 4.5i | 4.5i | 4.2i | 4.2i | 4.2i | 4.0i | 4.0i | 4.0i | 3.8i | 3.8i | 3.8i | 3.6i | 3.6i | 3.6i | 3.4i | 3.4i | 3.4i |
| | 230 | 610 | 3.7i | 3.7i | 3.7i | 3.4i | 3.4i | 3.4i | 3.2i | 3.2i | 3.2i | 3.0i | 3.0i | 3.0i | 2.8a | 2.8a | 2.8a | 2.7a | 2.7a | 2.7a |
| **600S200-54** | 345 | 305 | 6.9 | 6.9 | 6.0 | 6.5 | 6.5 | 5.7 | 6.1 | 6.1 | 5.5 | 5.8 | 5.8 | 5.3 | 5.5 | 5.5 | 5.1 | 5.3 | 5.3 | 5.0 |
| | 345 | 406 | 6.0 | 6.0 | 5.4 | 5.6 | 5.6 | 5.2 | 5.3 | 5.3 | 5.0 | 5.0 | 5.0 | 4.8 | 4.8 | 4.8 | 4.7 | 4.6i | 4.6i | 4.5i |
| | 345 | 610 | 4.9 | 4.9 | 4.7 | 4.6i | 4.6i | 4.5i | 4.3i | 4.3i | 4.3i | 4.1i | 4.1i | 4.1i | 3.9i | 3.9i | 3.9i | 3.7i | 3.7i | 3.7i |
| **600S200-68** | 345 | 305 | 8.0 | 7.6 | 6.4 | 7.5 | 7.3 | 6.1 | 7.1 | 7.0 | 5.9 | 6.7 | 6.7 | 5.7 | 6.4 | 6.4 | 5.5 | 6.1 | 6.1 | 5.4 |
| | 345 | 406 | 7.0 | 6.9 | 5.8 | 6.5 | 6.5 | 5.6 | 6.1 | 6.1 | 5.4 | 5.8 | 5.8 | 5.2 | 5.5 | 5.5 | 5.0 | 5.3 | 5.3 | 4.9 |
| | 345 | 610 | 5.7 | 5.7 | 5.1 | 5.3 | 5.3 | 4.9 | 5.0 | 5.0 | 4.7 | 4.8 | 4.8 | 4.5 | 4.5 | 4.5 | 4.4 | 4.3 | 4.3 | 4.3 |
| **600S200-97** | 345 | 305 | 9.7 | 8.4 | 7.1 | 9.2 | 8.1 | 6.8 | 8.8 | 7.8 | 6.5 | 8.4 | 7.5 | 6.3 | 8.0 | 7.3 | 6.1 | 7.6 | 7.1 | 6.0 |
| | 345 | 406 | 8.7 | 7.7 | 6.5 | 8.1 | 7.3 | 6.2 | 7.6 | 7.1 | 6.0 | 7.2 | 6.8 | 5.7 | 6.9 | 6.6 | 5.6 | 6.6 | 6.4 | 5.4 |
| | 345 | 610 | 7.1 | 6.7 | 5.7 | 6.6 | 6.4 | 5.4 | 6.2 | 6.2 | 5.2 | 5.9 | 5.9 | 5.0 | 5.6 | 5.6 | 4.9 | 5.4 | 5.4 | 4.7 |
| **600S250-33** | 230 | 305 | 4.4i | 4.4i | 4.4i | 4.0i | 4.0i | 4.0i | 3.8i | 3.8i | 3.8i | 3.5i | 3.5i | 3.5i | 3.3a | 3.3a | 3.3a | 3.1a | 3.1a | 3.1a |
| | 230 | 406 | 3.7i | 3.7i | 3.7i | 3.4a | 3.4a | 3.4a | 3.1a | 3.1a | 3.1a | 2.9a | 2.9a | 2.9a | 2.7a | 2.7a | 2.7a | 2.6a | 2.6a | 2.6a |
| | 230 | 610 | 2.8a | 2.8a | 2.8a | 2.6a | 2.6a | 2.6a | 2.4a | 2.4a | 2.4a | 2.2a | 2.2a | 2.2a | 2.0a | 2.0a | 2.0a | 1.9a | 1.9a | 1.9a |
| **600S250-43** | 230 | 305 | 5.3i | 5.3i | 5.3i | 5.0i | 5.0i | 5.0i | 4.7i | 4.7i | 4.7i | 4.5i | 4.5i | 4.5i | 4.3i | 4.3i | 4.3i | 4.1i | 4.1i | 4.1i |
| | 230 | 406 | 4.6i | 4.6i | 4.6i | 4.3i | 4.3i | 4.3i | 4.1i | 4.1i | 4.1i | 3.9i | 3.9i | 3.9i | 3.7i | 3.7i | 3.7i | 3.5i | 3.5i | 3.5i |
| | 230 | 610 | 3.8i | 3.8i | 3.8i | 3.5i | 3.5i | 3.5i | 3.3i | 3.3i | 3.3i | 3.1a | 3.1a | 3.1a | 2.9a | 2.9a | 2.9a | 2.7a | 2.7a | 2.7a |
| **600S250-54** | 345 | 305 | 7.1 | 7.1 | 6.2 | 6.6 | 6.6 | 5.9 | 6.2 | 6.2 | 5.7 | 5.9 | 5.9 | 5.5 | 5.7 | 5.7 | 5.3 | 5.4 | 5.4 | 5.2 |
| | 345 | 406 | 6.1 | 6.1 | 5.6 | 5.7 | 5.7 | 5.4 | 5.4 | 5.4 | 5.2 | 5.1 | 5.1 | 5.0 | 4.9 | 4.9 | 4.8 | 4.7i | 4.7i | 4.7i |
| | 345 | 610 | 5.0 | 5.0 | 4.9 | 4.7i | 4.7i | 4.7i | 4.4i | 4.4i | 4.4i | 4.2i | 4.2i | 4.2i | 4.0i | 4.0i | 4.0i | 3.8i | 3.8i | 3.8i |
| **600S250-68** | 345 | 305 | 8.3 | 7.9 | 6.7 | 7.7 | 7.6 | 6.4 | 7.3 | 7.3 | 6.2 | 6.9 | 6.9 | 5.9 | 6.6 | 6.6 | 5.8 | 6.3 | 6.3 | 5.6 |
| | 345 | 406 | 7.2 | 7.2 | 6.1 | 6.7 | 6.7 | 5.8 | 6.3 | 6.3 | 5.6 | 6.0 | 6.0 | 5.4 | 5.7 | 5.7 | 5.2 | 5.5 | 5.5 | 5.1 |
| | 345 | 610 | 5.8 | 5.8 | 5.3 | 5.5 | 5.5 | 5.1 | 5.1 | 5.1 | 4.9 | 4.9 | 4.9 | 4.7 | 4.7 | 4.7 | 4.6 | 4.5 | 4.5 | 4.4 |
| **600S250-97** | 345 | 305 | 10.1 | 8.9 | 7.5 | 9.7 | 8.5 | 7.2 | 9.1 | 8.2 | 6.9 | 8.7 | 7.9 | 6.6 | 8.3 | 7.6 | 6.4 | 7.9 | 7.4 | 6.2 |
| | 345 | 406 | 9.0 | 8.1 | 6.8 | 8.4 | 7.7 | 6.5 | 7.9 | 7.4 | 6.2 | 7.5 | 7.2 | 6.0 | 7.2 | 6.9 | 5.8 | 6.9 | 6.7 | 5.7 |
| | 345 | 610 | 7.3 | 7.0 | 5.9 | 6.9 | 6.7 | 5.7 | 6.5 | 6.5 | 5.5 | 6.1 | 6.1 | 5.3 | 5.8 | 5.8 | 5.1 | 5.6 | 5.6 | 5.0 |
| **600S300-33** | 230 | 305 | 4.4i | 4.4i | 4.4i | 4.1i | 4.1i | 4.1i | 3.8i | 3.8i | 3.8i | 3.6i | 3.6i | 3.6i | 3.3a | 3.3a | 3.3a | 3.2a | 3.2a | 3.2a |
| | 230 | 406 | 3.7i | 3.7i | 3.7i | 3.4a | 3.4a | 3.4a | 3.2a | 3.2a | 3.2a | 2.9a | 2.9a | 2.9a | 2.8a | 2.8a | 2.8a | 2.6a | 2.6a | 2.6a |
| | 230 | 610 | 2.8a | 2.8a | 2.8a | 2.6a | 2.6a | 2.6a | 2.4a | 2.4a | 2.4a | 2.2a | 2.2a | 2.2a | 2.1a | 2.1a | 2.1a | 1.9a | 1.9a | 1.9a |
| **600S300-43** | 230 | 305 | 5.4i | 5.4i | 5.4i | 5.1i | 5.1i | 5.1i | 4.8i | 4.8i | 4.8i | 4.5i | 4.5i | 4.5i | 4.3i | 4.3i | 4.3i | 4.1i | 4.1i | 4.1i |
| | 230 | 406 | 4.7i | 4.7i | 4.7i | 4.4i | 4.4i | 4.4i | 4.1i | 4.1i | 4.1i | 3.9i | 3.9i | 3.9i | 3.7i | 3.7i | 3.7i | 3.5i | 3.5i | 3.5i |
| | 230 | 610 | 3.8i | 3.8i | 3.8i | 3.5i | 3.5i | 3.5i | 3.3i | 3.3i | 3.3i | 3.1a | 3.1a | 3.1a | 2.9a | 2.9a | 2.9a | 2.8a | 2.8a | 2.8a |
| **600S300-54** | 345 | 305 | 7.2 | 7.2 | 6.3 | 6.7 | 6.7 | 6.1 | 6.4 | 6.4 | 5.8 | 6.0 | 6.0 | 5.6 | 5.7 | 5.7 | 5.4 | 5.5 | 5.5 | 5.3 |
| | 345 | 406 | 6.2 | 6.2 | 5.7 | 5.8 | 5.8 | 5.5 | 5.5 | 5.5 | 5.3 | 5.2 | 5.2 | 5.1 | 5.0i | 5.0i | 4.9i | 4.8i | 4.8i | 4.8i |
| | 345 | 610 | 5.1 | 5.1 | 5.0 | 4.8i | 4.8i | 4.8i | 4.5i | 4.5i | 4.5i | 4.3i | 4.3i | 4.3i | 4.0i | 4.0i | 4.0i | 3.8i | 3.8i | 3.8i |
| **600S300-68** | 345 | 305 | 8.4 | 8.2 | 6.9 | 7.9 | 7.8 | 6.6 | 7.4 | 7.4 | 6.3 | 7.0 | 7.0 | 6.1 | 6.7 | 6.7 | 5.9 | 6.4 | 6.4 | 5.7 |
| | 345 | 406 | 7.3 | 7.3 | 6.3 | 6.8 | 6.8 | 6.0 | 6.4 | 6.4 | 5.7 | 6.1 | 6.1 | 5.6 | 5.8 | 5.8 | 5.4 | 5.6 | 5.6 | 5.2 |
| | 345 | 610 | 6.0 | 6.0 | 5.5 | 5.6 | 5.6 | 5.2 | 5.2 | 5.2 | 5.0 | 5.0 | 5.0 | 4.8 | 4.7 | 4.7 | 4.7 | 4.5 | 4.5 | 4.5 |
| **600S300-97** | 345 | 305 | 10.5 | 9.2 | 7.8 | 9.9 | 8.8 | 7.4 | 9.4 | 8.5 | 7.1 | 8.9 | 8.2 | 6.9 | 8.5 | 7.9 | 6.7 | 8.1 | 7.7 | 6.5 |
| | 345 | 406 | 9.2 | 8.4 | 7.0 | 8.6 | 8.0 | 6.7 | 8.1 | 7.7 | 6.5 | 7.7 | 7.4 | 6.3 | 7.3 | 7.2 | 6.1 | 7.0 | 7.0 | 5.9 |
| | 345 | 610 | 7.5 | 7.3 | 6.2 | 7.0 | 7.0 | 5.9 | 6.6 | 6.6 | 5.7 | 6.3 | 6.3 | 5.5 | 6.0 | 6.0 | 5.3 | 5.7 | 5.7 | 5.1 |

**NOTES:**

1) $p = I_w \{qC_eC_gC_p\}$; $I_w$ of 0.75 has been incorpotated in the deflection values of the table.
The parameters in the bracket { } must be determined by the design professional in accordance with the NBCC.

2) "e" web stiffeners required at ends; "i" web stiffeners required at interior support; "a" web stiffeners required at ends and interior supports.

Bailey Metal Products, Dass Metal Products, DCM Metal Corp., EB Métal Inc., Imperial Building Products, Manugypse, Groupe UP, Trebor Building Products Ltd.

## DOUBLE SPAN CURTAIN WALL LIMITING HEIGHTS (m)

| Stud Designation | Specified Loads $F_y$ (MPa) | Spacing (mm) | 1.75 kPa | | | 2.00 kPa | | | 2.25 kPa | | | 2.50 kPa | | | 2.75 kPa | | | 3.00 kPa | | |
|---|---|---|---|---|---|---|---|---|---|---|---|---|---|---|---|---|---|---|---|---|
| | | | L/240 | L/360 | L/600 | L/240 | L/360 | L/600 | L/240 | L/360 | L/600 | L/240 | L/360 | L/600 | L/240 | L/360 | L/600 | L/240 | L/360 | L/600 |
| **800S162-43** | 230 | 305 | 5.7a | 5.7a | 5.7a | 5.3a | 5.3a | 5.3a | 5.0a | 5.0a | 5.0a | 4.7a | 4.7a | 4.7a | 4.4a | 4.4a | 4.4a | 4.2a | 4.2a | 4.2a |
| | 230 | 406 | 4.9a | 4.9a | 4.9a | 4.5a | 4.5a | 4.5a | 4.2a | 4.2a | 4.2a | 3.9a | 3.9a | 3.9a | 3.7a | 3.7a | 3.7a | 3.5a | 3.5a | 3.5a |
| | 230 | 610 | 3.8a | 3.8a | 3.8a | 3.5a | 3.5a | 3.5a | 3.3a | 3.3a | 3.3a | 3.1a | 3.1a | 3.1a | 2.9a | 2.9a | 2.9a | 2.7a | 2.7a | 2.7a |
| **800S162-54** | 345 | 305 | 7.5 | 7.5 | 7.1 | 7.1 | 7.1 | 6.8 | 6.7 | 6.7 | 6.5 | 6.3 | 6.3 | 6.3 | 6.0 | 6.0 | 6.0 | 5.8 | 5.8 | 5.8 |
| | 345 | 406 | 6.5 | 6.5 | 6.5 | 6.1 | 6.1 | 6.1 | 5.8 | 5.8 | 5.8 | 5.5i | 5.5i | 5.5i | 5.2i | 5.2i | 5.2i | 5.0i | 5.0i | 5.0i |
| | 345 | 610 | 5.3i | 5.3i | 5.3i | 5.0i | 5.0i | 5.0i | 4.7i | 4.7i | 4.7i | 4.5i | 4.5i | 4.5i | 4.3a | 4.3a | 4.3a | 4.0a | 4.0a | 4.0a |
| **800S162-68** | 345 | 305 | 8.8 | 8.8 | 7.7 | 8.3 | 8.3 | 7.4 | 7.8 | 7.8 | 7.1 | 7.4 | 7.4 | 6.8 | 7.1 | 7.1 | 6.6 | 6.8 | 6.8 | 6.4 |
| | 345 | 406 | 7.7 | 7.7 | 7.0 | 7.2 | 7.2 | 6.7 | 6.8 | 6.8 | 6.4 | 6.4 | 6.4 | 6.2 | 6.1 | 6.1 | 6.0 | 5.8 | 5.8 | 5.8 |
| | 345 | 610 | 6.3 | 6.3 | 6.1 | 5.8 | 5.8 | 5.8 | 5.5 | 5.5 | 5.5 | 5.2 | 5.2 | 5.2 | 5.0i | 5.0i | 5.0i | 4.8i | 4.8i | 4.8i |
| **800S162-97** | 345 | 305 | 11.2 | 10.1 | 8.6 | 10.4 | 9.7 | 8.2 | 9.8 | 9.3 | 7.9 | 9.3 | 9.0 | 7.6 | 8.9 | 8.7 | 7.4 | 8.5 | 8.5 | 7.1 |
| | 345 | 406 | 9.7 | 9.2 | 7.8 | 9.0 | 8.8 | 7.4 | 8.5 | 8.5 | 7.1 | 8.1 | 8.1 | 6.9 | 7.7 | 7.7 | 6.7 | 7.4 | 7.4 | 6.5 |
| | 345 | 610 | 7.9 | 7.9 | 6.8 | 7.4 | 7.4 | 6.5 | 7.0 | 7.0 | 6.2 | 6.6 | 6.6 | 6.0 | 6.3 | 6.3 | 5.8 | 6.0 | 6.0 | 5.7 |
| **800S200-43** | 230 | 305 | 6.1a | 6.1a | 6.1a | 5.7a | 5.7a | 5.7a | 5.4a | 5.4a | 5.4a | 5.1a | 5.1a | 5.1a | 4.9a | 4.9a | 4.9a | 4.6a | 4.6a | 4.6a |
| | 230 | 406 | 5.3a | 5.3a | 5.3a | 4.9a | 4.9a | 4.9a | 4.6a | 4.6a | 4.6a | 4.3a | 4.3a | 4.3a | 4.1a | 4.1a | 4.1a | 3.8a | 3.8a | 3.8a |
| | 230 | 610 | 4.2a | 4.2a | 4.2a | 3.8a | 3.8a | 3.8a | 3.6a | 3.6a | 3.6a | 3.3a | 3.3a | 3.3a | 3.1a | 3.1a | 3.1a | 2.9a | 2.9a | 2.9a |
| **800S200-54** | 345 | 305 | 8.1 | 8.1 | 7.5 | 7.6 | 7.6 | 7.2 | 7.1 | 7.1 | 6.9 | 6.8 | 6.8 | 6.7 | 6.5 | 6.5 | 6.5 | 6.2i | 6.2i | 6.2i |
| | 345 | 406 | 7.0 | 7.0 | 6.8 | 6.6 | 6.6 | 6.5 | 6.2i | 6.2i | 6.2i | 5.9i | 5.9i | 5.9i | 5.6i | 5.6i | 5.6i | 5.4i | 5.4i | 5.4i |
| | 345 | 610 | 5.7i | 5.7i | 5.7i | 5.4i | 5.4i | 5.4i | 5.0a | 5.0a | 5.0a | 4.8a | 4.8a | 4.8a | 4.6a | 4.6a | 4.6a | 4.4a | 4.4a | 4.4a |
| **800S200-68** | 345 | 305 | 9.5 | 9.5 | 8.1 | 8.8 | 8.8 | 7.7 | 8.3 | 8.3 | 7.4 | 7.9 | 7.9 | 7.2 | 7.5 | 7.5 | 6.9 | 7.2 | 7.2 | 6.7 |
| | 345 | 406 | 8.2 | 8.2 | 7.3 | 7.7 | 7.7 | 7.0 | 7.2 | 7.2 | 6.7 | 6.8 | 6.8 | 6.5 | 6.5 | 6.5 | 6.3 | 6.3 | 6.3 | 6.1 |
| | 345 | 610 | 6.7 | 6.7 | 6.4 | 6.3 | 6.3 | 6.1 | 5.9 | 5.9 | 5.9 | 5.6i | 5.6i | 5.6i | 5.3i | 5.3i | 5.3i | 5.1i | 5.1i | 5.1i |
| **800S200-97** | 345 | 305 | 11.9 | 10.6 | 9.0 | 11.1 | 10.2 | 8.6 | 10.5 | 9.8 | 8.2 | 10.0 | 9.4 | 8.0 | 9.5 | 9.1 | 7.7 | 9.1 | 8.9 | 7.5 |
| | 345 | 406 | 10.3 | 9.7 | 8.1 | 9.6 | 9.2 | 7.8 | 9.1 | 8.9 | 7.5 | 8.6 | 8.6 | 7.2 | 8.2 | 8.2 | 7.0 | 7.9 | 7.9 | 6.8 |
| | 345 | 610 | 8.4 | 8.4 | 7.1 | 7.9 | 7.9 | 6.8 | 7.4 | 7.4 | 6.5 | 7.0 | 7.0 | 6.3 | 6.7 | 6.7 | 6.1 | 6.4 | 6.4 | 5.9 |
| **800S250-43** | 230 | 305 | 6.2a | 6.2a | 6.2a | 5.8a | 5.8a | 5.8a | 5.5a | 5.5a | 5.5a | 5.2a | 5.2a | 5.2a | 4.9a | 4.9a | 4.9a | 4.6a | 4.6a | 4.6a |
| | 230 | 406 | 5.4a | 5.4a | 5.4a | 5.0a | 5.0a | 5.0a | 4.6a | 4.6a | 4.6a | 4.3a | 4.3a | 4.3a | 4.1a | 4.1a | 4.1a | 3.9a | 3.9a | 3.9a |
| | 230 | 610 | 4.2a | 4.2a | 4.2a | 3.9a | 3.9a | 3.9a | 3.6a | 3.6a | 3.6a | 3.3a | 3.3a | 3.3a | 3.1a | 3.1a | 3.1a | 2.9a | 2.9a | 2.9a |
| **800S250-54** | 345 | 305 | 8.3 | 8.3 | 7.7 | 7.8 | 7.8 | 7.4 | 7.3 | 7.3 | 7.1 | 6.9 | 6.9 | 6.9 | 6.6i | 6.6i | 6.6i | 6.3i | 6.3i | 6.3i |
| | 345 | 406 | 7.2 | 7.2 | 7.0 | 6.7i | 6.7i | 6.7i | 6.3i | 6.3i | 6.3i | 6.0i | 6.0i | 6.0i | 5.7a | 5.7a | 5.7a | 5.5a | 5.5a | 5.5a |
| | 345 | 610 | 5.9i | 5.9i | 5.9i | 5.5a | 5.5a | 5.5a | 5.2a | 5.2a | 5.2a | 4.9a | 4.9a | 4.9a | 4.7a | 4.7a | 4.7a | 4.4a | 4.4a | 4.4a |
| **800S250-68** | 345 | 305 | 9.7 | 9.7 | 8.4 | 9.1 | 9.1 | 8.0 | 8.6 | 8.6 | 7.7 | 8.1 | 8.1 | 7.4 | 7.7 | 7.7 | 7.2 | 7.4 | 7.4 | 7.0 |
| | 345 | 406 | 8.4 | 8.4 | 7.6 | 7.9 | 7.9 | 7.3 | 7.4 | 7.4 | 7.0 | 7.0 | 7.0 | 6.8 | 6.7 | 6.7 | 6.5 | 6.4 | 6.4 | 6.4 |
| | 345 | 610 | 6.9 | 6.9 | 6.7 | 6.4 | 6.4 | 6.4 | 6.0i | 6.0i | 6.0i | 5.7i | 5.7i | 5.7i | 5.5i | 5.5i | 5.5i | 5.2i | 5.2i | 5.2i |
| **800S250-97** | 345 | 305 | 12.3 | 11.1 | 9.4 | 11.5 | 10.6 | 9.0 | 10.8 | 10.2 | 8.6 | 10.3 | 9.9 | 8.3 | 9.8 | 9.6 | 8.1 | 9.4 | 9.3 | 7.8 |
| | 345 | 406 | 10.6 | 10.1 | 8.5 | 9.9 | 9.7 | 8.1 | 9.4 | 9.3 | 7.8 | 8.9 | 8.9 | 7.6 | 8.5 | 8.5 | 7.3 | 8.1 | 8.1 | 7.1 |
| | 345 | 610 | 8.7 | 8.7 | 7.4 | 8.1 | 8.1 | 7.1 | 7.7 | 7.7 | 6.8 | 7.3 | 7.3 | 6.6 | 6.9 | 6.9 | 6.4 | 6.6 | 6.6 | 6.2 |
| **800S300-43** | 230 | 305 | 6.3a | 6.3a | 6.3a | 5.9a | 5.9a | 5.9a | 5.5a | 5.5a | 5.5a | 5.2a | 5.2a | 5.2a | 4.9a | 4.9a | 4.9a | 4.6a | 4.6a | 4.6a |
| | 230 | 406 | 5.4a | 5.4a | 5.4a | 5.0a | 5.0a | 5.0a | 4.6a | 4.6a | 4.6a | 4.3a | 4.3a | 4.3a | 4.1a | 4.1a | 4.1a | 3.9a | 3.9a | 3.9a |
| | 230 | 610 | 4.2a | 4.2a | 4.2a | 3.9a | 3.9a | 3.9a | 3.6a | 3.6a | 3.6a | 3.3a | 3.3a | 3.3a | 3.1a | 3.1a | 3.1a | 2.9a | 2.9a | 2.9a |
| **800S300-54** | 345 | 305 | 8.4 | 8.4 | 7.9 | 7.9 | 7.9 | 7.6 | 7.4 | 7.4 | 7.3 | 7.0 | 7.0 | 7.0 | 6.7i | 6.7i | 6.7i | 6.4i | 6.4i | 6.4i |
| | 345 | 406 | 7.3 | 7.3 | 7.2 | 6.8i | 6.8i | 6.8i | 6.4i | 6.4i | 6.4i | 6.1i | 6.1i | 6.1i | 5.8a | 5.8a | 5.8a | 5.6a | 5.6a | 5.6a |
| | 345 | 610 | 5.9i | 5.9i | 5.9i | 5.6a | 5.6a | 5.6a | 5.2a | 5.2a | 5.2a | 4.9a | 4.9a | 4.9a | 4.7a | 4.7a | 4.7a | 4.4a | 4.4a | 4.4a |
| **800S300-68** | 345 | 305 | 9.9 | 9.9 | 8.6 | 9.2 | 9.2 | 8.2 | 8.7 | 8.7 | 7.9 | 8.2 | 8.2 | 7.6 | 7.9 | 7.9 | 7.4 | 7.5 | 7.5 | 7.2 |
| | 345 | 406 | 8.5 | 8.5 | 7.8 | 8.0 | 8.0 | 7.5 | 7.5 | 7.5 | 7.2 | 7.1 | 7.1 | 6.9 | 6.8 | 6.8 | 6.7 | 6.5 | 6.5 | 6.5 |
| | 345 | 610 | 7.0 | 7.0 | 6.8 | 6.5 | 6.5 | 6.5 | 6.1i | 6.1i | 6.1i | 5.8i | 5.8i | 5.8i | 5.6i | 5.6i | 5.6i | 5.3i | 5.3i | 5.3i |
| **800S300-97** | 345 | 305 | 12.5 | 11.5 | 9.7 | 11.7 | 11.0 | 9.3 | 11.1 | 10.6 | 8.9 | 10.5 | 10.2 | 8.6 | 10.0 | 9.9 | 8.3 | 9.6 | 9.6 | 8.1 |
| | 345 | 406 | 10.9 | 10.4 | 8.8 | 10.2 | 10.0 | 8.4 | 9.6 | 9.6 | 8.1 | 9.1 | 9.1 | 7.8 | 8.7 | 8.7 | 7.6 | 8.3 | 8.3 | 7.4 |
| | 345 | 610 | 8.9 | 8.9 | 7.7 | 8.3 | 8.3 | 7.4 | 7.8 | 7.8 | 7.1 | 7.4 | 7.4 | 6.8 | 7.1 | 7.1 | 6.6 | 6.8 | 6.8 | 6.4 |

**NOTES:**

1) $p = I_w \{qC_eC_gC_p\}$; $I_w$ of 0.75 has been incorpotated in the deflection values of the table.
The parameters in the bracket { } must be determined by the design professional in accordance with the NBCC.

2) "e" web stiffeners required at ends; "i" web stiffeners required at interior support; "a" web stiffeners required at ends and interior supports.

Bailey Metal Products, Dass Metal Products, DCM Metal Corp., EB Métal Inc., Imperial Building Products, Manugypse, Groupe UP, Trebor Building Products Ltd.

## Combined Axial and Lateral Load Tables

### Table Notes

1 Limiting factored axial compressive resistances are based on a simple one span condition and are given in kN based on the assumption that the axial load passes through the centroid of the effective section.

2 Limiting axial resistances are based on 1.22 m on centre bracing. The ends of the studs are also assumed to be laterally and torsionally restrained. Design bridging for the accumulated torsion between bridging lines in combination with the discrete bracing requirements. Provide periodic anchorage for the bridging as required structurally.

3 Wind loads shown are factored and uniformly distributed over the surface of the wall. Axial loads are factored and are per stud. Seismic loads are not considered.

4 For wind load deflection calculations, $p = I_w \{qC_eC_gC_p\}$. $I_w$ of 0.75 has been incorporated in the deflection values of the table. The parameters in the bracket { } must be determined by the design professional in accordance with the NBCC.

5 End supports are not checked for web crippling. See web crippling data on page 83.

Bailey Metal Products, Dass Metal Products, DCM Metal Corp., EB Metal Inc., Imperial Building Products, Manugypse, Groupe UP, Trebor Building Products Ltd.

# COMBINED AXIAL AND LATERAL LOAD TABLE

Limiting Factored Axial Compressive Resistance Per Stud (kN)

## 0 kPa Factored Lateral Load

| Wall Height (m) | Stud Spacing (mm) | 362S162 | | | | | 362S200 | | | | | 362S250 | | | | | 362S300 | | | | |
|---|---|---|---|---|---|---|---|---|---|---|---|---|---|---|---|---|---|---|---|---|---|
| | | 230 MPa | | 345 MPa | | | 230 MPa | | 345 MPa | | | 230 MPa | | 345 MPa | | | 230 MPa | | 345 MPa | | |
| | | 33 | 43 | 54 | 68 | 97 | 33 | 43 | 54 | 68 | 97 | 33 | 43 | 54 | 68 | 97 | 33 | 43 | 54 | 68 | 97 |
| 2.40 | 305 | 13.5 | 18.5 | 28.1 | 36.1 | 52.3 | 16.0 | 22.8 | 35.0 | 44.6 | 63.1 | 17.3 | 25.7 | 39.1 | 51.7 | 72.7 | 18.0 | 26.2 | 39.3 | 54.1 | 79.9 |
| | 406 | 13.5 | 18.5 | 28.1 | 36.1 | 52.3 | 16.0 | 22.8 | 35.0 | 44.6 | 63.1 | 17.3 | 25.7 | 39.1 | 51.7 | 72.7 | 18.0 | 26.2 | 39.3 | 54.1 | 79.9 |
| | 610 | 13.5 | 18.5 | 28.1 | 36.1 | 52.3 | 16.0 | 22.8 | 35.0 | 44.6 | 63.1 | 17.3 | 25.7 | 39.1 | 51.7 | 72.7 | 18.0 | 26.2 | 39.3 | 54.1 | 79.9 |
| 2.80 | 305 | 12.9 | 17.7 | 26.1 | 33.3 | 47.8 | 15.4 | 21.6 | 32.3 | 40.8 | 57.5 | 16.6 | 24.7 | 36.7 | 47.4 | 66.4 | 17.3 | 25.2 | 37.0 | 50.5 | 74.7 |
| | 406 | 12.9 | 17.7 | 26.1 | 33.3 | 47.8 | 15.4 | 21.6 | 32.3 | 40.8 | 57.5 | 16.6 | 24.7 | 36.7 | 47.4 | 66.4 | 17.3 | 25.2 | 37.0 | 50.5 | 74.7 |
| | 610 | 12.9 | 17.7 | 26.1 | 33.3 | 47.8 | 15.4 | 21.6 | 32.3 | 40.8 | 57.5 | 16.6 | 24.7 | 36.7 | 47.4 | 66.4 | 17.3 | 25.2 | 37.0 | 50.5 | 74.7 |
| 3.20 | 305 | 12.2 | 16.7 | 23.8 | 30.0 | 42.8 | 14.6 | 20.3 | 29.2 | 36.6 | 51.3 | 15.8 | 23.5 | 34.0 | 42.6 | 59.5 | 16.5 | 24.2 | 34.5 | 46.1 | 67.3 |
| | 406 | 12.2 | 16.7 | 23.8 | 30.0 | 42.8 | 14.6 | 20.3 | 29.2 | 36.6 | 51.3 | 15.8 | 23.5 | 34.0 | 42.6 | 59.5 | 16.5 | 24.2 | 34.5 | 46.1 | 67.3 |
| | 610 | 12.2 | 16.7 | 23.8 | 30.0 | 42.8 | 14.6 | 20.3 | 29.2 | 36.6 | 51.3 | 15.8 | 23.4 | 34.0 | 42.6 | 59.5 | 16.5 | 24.1 | 34.5 | 46.1 | 67.3 |
| 3.60 | 305 | 11.4 | 15.5 | 21.1 | 26.4 | 37.3 | 13.7 | 18.8 | 25.8 | 32.1 | 44.8 | 14.9 | 21.8 | 30.2 | 37.5 | 52.2 | 15.6 | 22.9 | 32.1 | 41.7 | 59.4 |
| | 406 | 11.4 | 15.5 | 21.1 | 26.4 | 37.3 | 13.7 | 18.8 | 25.8 | 32.1 | 44.8 | 14.9 | 21.8 | 30.2 | 37.5 | 52.2 | 15.6 | 22.9 | 32.1 | 41.7 | 59.4 |
| | 610 | 11.4 | 15.5 | 21.1 | 26.4 | 37.3 | 13.7 | 18.8 | 25.8 | 32.1 | 44.8 | 14.9 | 21.8 | 30.2 | 37.5 | 52.2 | 15.6 | 22.9 | 32.1 | 41.7 | 59.3 |
| 4.00 | 305 | 10.5 | 14.2 | 18.5 | 23.1 | 32.3 | 12.7 | 17.2 | 22.5 | 28.0 | 38.8 | 13.9 | 20.0 | 26.4 | 32.7 | 45.3 | 14.6 | 21.6 | 29.2 | 37.4 | 51.7 |
| | 406 | 10.5 | 14.2 | 18.5 | 23.1 | 32.3 | 12.7 | 17.2 | 22.5 | 28.0 | 38.8 | 13.9 | 20.0 | 26.4 | 32.7 | 45.3 | 14.6 | 21.6 | 29.2 | 37.4 | 51.7 |
| | 610 | 10.5 | 14.2 | 18.5 | 23.1 | 32.3 | 12.7 | 17.2 | 22.5 | 28.0 | 38.8 | 13.9 | 20.0 | 26.4 | 32.7 | 45.3 | 14.6 | 21.6 | 29.2 | 37.4 | 51.7 |
| 4.40 | 305 | 9.5 | 12.9 | 16.2 | 20.2 | 28.0 | 11.6 | 15.6 | 19.7 | 24.4 | 33.6 | 12.9 | 18.2 | 23.1 | 28.6 | 39.5 | 13.6 | 20.2 | 26.4 | 32.8 | 45.2 |
| | 406 | 9.5 | 12.9 | 16.2 | 20.2 | 28.0 | 11.6 | 15.6 | 19.7 | 24.4 | 33.6 | 12.9 | 18.2 | 23.1 | 28.6 | 39.5 | 13.6 | 20.2 | 26.4 | 32.8 | 45.2 |
| | 610 | 9.5 | 12.9 | 16.2 | 20.2 | 28.0 | 11.5 | 15.6 | 19.7 | 24.4 | 33.6 | 12.9 | 18.2 | 23.1 | 28.6 | 39.5 | 13.6 | 20.2 | 26.4 | 32.7 | 45.2 |
| 4.80 | 305 | 8.5 | 11.5 | 14.3 | 17.7 | 24.3 | 10.3 | 13.9 | 17.3 | 21.3 | 29.3 | 11.8 | 16.3 | 20.3 | 25.1 | 34.6 | 12.6 | 18.6 | 23.3 | 28.8 | 39.7 |
| | 406 | 8.5 | 11.5 | 14.3 | 17.7 | 24.3 | 10.3 | 13.9 | 17.3 | 21.3 | 29.3 | 11.8 | 16.3 | 20.3 | 25.1 | 34.6 | 12.6 | 18.6 | 23.3 | 28.8 | 39.7 |
| | 610 | 8.5 | 11.5 | 14.3 | 17.7 | 24.3 | 10.3 | 13.9 | 17.3 | 21.3 | 29.3 | 11.8 | 16.3 | 20.3 | 25.1 | 34.6 | 12.6 | 18.6 | 23.3 | 28.8 | 39.7 |
| 5.20 | 305 | 7.6 | 10.2 | 12.6 | 15.6 | 21.3 | 9.2 | 12.3 | 15.2 | 18.8 | 25.7 | 10.7 | 14.5 | 17.9 | 22.2 | 30.4 | 11.5 | 16.6 | 20.6 | 25.5 | 35.1 |
| | 406 | 7.6 | 10.2 | 12.6 | 15.6 | 21.3 | 9.2 | 12.3 | 15.2 | 18.8 | 25.7 | 10.7 | 14.5 | 17.9 | 22.1 | 30.4 | 11.5 | 16.6 | 20.6 | 25.5 | 35.1 |
| | 610 | 7.6 | 10.2 | 12.6 | 15.5 | 21.3 | 9.2 | 12.3 | 15.2 | 18.8 | 25.7 | 10.7 | 14.5 | 17.9 | 22.1 | 30.4 | 11.5 | 16.6 | 20.6 | 25.5 | 35.0 |
| 5.60 | 305 | 6.8 | 9.0 | 11.2 | 13.8 | 18.8 | 8.2 | 10.9 | 13.5 | 16.6 | 22.7 | 9.7 | 12.9 | 15.9 | 19.6 | 26.9 | 10.5 | 14.8 | 18.3 | 22.6 | 31.1 |
| | 406 | 6.8 | 9.0 | 11.2 | 13.7 | 18.8 | 8.2 | 10.9 | 13.5 | 16.6 | 22.7 | 9.7 | 12.9 | 15.9 | 19.6 | 26.9 | 10.5 | 14.8 | 18.3 | 22.6 | 31.1 |
| | 610 | 6.8 | 9.0 | 11.1 | 13.7 | 18.8 | 8.2 | 10.9 | 13.5 | 16.6 | 22.7 | 9.7 | 12.8 | 15.9 | 19.6 | 26.9 | 10.5 | 14.8 | 18.3 | 22.6 | 31.1 |
| 6.00 | 305 | 6.1 | 8.1 | 9.9 | 12.2 | 16.6 | 7.4 | 9.7 | 12.0 | 14.8 | 20.1 | 8.7 | 11.5 | 14.2 | 17.5 | 23.9 | 9.7 | 13.2 | 16.3 | 20.2 | 27.7 |
| | 406 | 6.1 | 8.1 | 9.9 | 12.2 | 16.6 | 7.4 | 9.7 | 12.0 | 14.8 | 20.1 | 8.7 | 11.5 | 14.2 | 17.5 | 23.9 | 9.7 | 13.2 | 16.3 | 20.2 | 27.7 |
| | 610 | 6.1 | 8.0 | 9.9 | 12.2 | 16.6 | 7.4 | 9.7 | 12.0 | 14.8 | 20.1 | 8.7 | 11.5 | 14.2 | 17.5 | 23.9 | 9.7 | 13.2 | 16.3 | 20.2 | 27.7 |

[1] Deflection meets L/120 [3] Deflection meets L/360

[2] Deflection meets L/240 [4] Deflection meets L/600

If no note, deflection meets L/720

Bailey Metal Products, Dass Metal Products, DCM Metal Corp., EB Metal Inc., Imperial Building Products, Manugypse, Groupe UP, Trebor Building Products Ltd.

# COMBINED AXIAL AND LATERAL LOAD TABLE

Limiting Factored Axial Compressive Resistance Per Stud (kN)

## 0.50 kPa Factored Lateral Load

| Wall Height (m) | Stud Spacing (mm) | 362S162 | | | | | 362S200 | | | | | 362S250 | | | | | 362S300 | | | | |
|---|---|---|---|---|---|---|---|---|---|---|---|---|---|---|---|---|---|---|---|---|---|
| | | 230 MPa | | 345 MPa | | | 230 MPa | | 345 MPa | | | 230 MPa | | 345 MPa | | | 230 MPa | | 345 MPa | | |
| | | 33 | 43 | 54 | 68 | 97 | 33 | 43 | 54 | 68 | 97 | 33 | 43 | 54 | 68 | 97 | 33 | 43 | 54 | 68 | 97 |
| 2.40 | 305 | 11.5 | 16.5 | 26.2 | 34.2 | 50.5 | 13.8 | 20.5 | 32.9 | 42.5 | 61.2 | 15.1 | 23.3 | 36.9 | 49.5 | 70.6 | 15.8 | 23.9 | 37.2 | 51.9 | 77.8 |
| | 406 | 10.9 | 15.8 | 25.6 | 33.6 | 49.9 | 13.1 | 19.8 | 32.2 | 41.8 | 60.6 | 14.4 | 22.6 | 36.1 | 48.7 | 70.0 | 15.1 | 23.2 | 36.5 | 51.2 | 77.1 |
| | 610 | 9.6 | 14.5 | 24.4 | 32.4 | 48.8 | 11.8 | 18.4 | 30.8 | 40.5 | 59.5 | 13.0 | 21.1 | 34.7 | 47.3 | 68.6 | 13.8 | 21.7 | 35.2 | 49.8 | 75.7 |
| 2.80 | 305 | 10.2 | 14.9 | 23.5 | 30.6 | 45.4 | 12.3 | 18.5 | 29.4 | 38.0 | 55.0 | 13.6 | 21.4 | 33.6 | 44.3 | 63.5 | 14.3 | 22.1 | 34.1 | 47.4 | 71.7 |
| | 406 | 9.3 | 14.0 | 22.7 | 29.8 | 44.6 | 11.4 | 17.6 | 28.5 | 37.1 | 54.2 | 12.7 | 20.4 | 32.7 | 43.3 | 62.6 | 13.4 | 21.1 | 33.2 | 46.4 | 70.8 |
| | 610 | 7.7 | 12.3 | 21.1 | 28.2 | 43.1 | 9.7 | 15.8 | 26.7 | 35.4 | 52.6 | 10.9 | 18.4 | 30.8 | 41.4 | 60.8 | 11.6 | 19.1 | 31.4 | 44.5 | 68.9 |
| 3.20 | 305 | 8.7 | 13.0 | 20.5 | 26.7 | 39.7 | 10.7 | 16.3 | 25.5 | 33.0 | 48.1 | 11.9 | 19.1 | 30.0 | 38.6 | 55.8 | 12.7 | 20.0 | 30.7 | 42.1 | 63.5 |
| | 406 | 7.7 | 11.9 | 19.5 | 25.7 | 38.7 | 9.6 | 15.1 | 24.4 | 31.9 | 47.1 | 10.8 | 17.8 | 28.7 | 37.4 | 54.7 | 11.5 | 18.7 | 29.5 | 40.9 | 62.3 |
| | 610 | 5.8[4] | 10.0 | 17.6 | 23.8 | 36.9 | 7.5 | 13.0 | 22.4 | 29.9 | 45.2 | 8.7 | 15.5 | 26.4 | 35.2 | 52.5 | 9.4 | 16.3 | 27.3 | 38.6 | 59.9 |
| 3.60 | 305 | 7.1 | 11.1 | 17.2 | 22.5 | 33.7 | 9.0 | 14.0 | 21.5 | 28.0 | 41.0 | 10.2 | 16.5 | 25.4 | 32.9 | 47.9 | 10.9 | 17.7 | 27.3 | 36.8 | 54.8 |
| | 406 | 6.0[4] | 9.9 | 16.1 | 21.4 | 32.6 | 7.7 | 12.6 | 20.3 | 26.7 | 39.9 | 8.8 | 15.1 | 24.0 | 31.5 | 46.6 | 9.6 | 16.2 | 25.9 | 35.4 | 53.4 |
| | 610 | 4.0[3] | 7.7[4] | 14.1 | 19.4 | 30.6 | 5.4[3] | 10.2[4] | 18.1 | 24.5 | 37.7 | 6.5[4] | 12.4 | 21.5 | 29.0 | 44.1 | 7.2[4] | 13.4 | 23.4 | 32.7 | 50.7 |
| 4.00 | 305 | 5.7[4] | 9.2 | 14.3 | 18.8 | 28.3 | 7.3 | 11.7 | 17.8 | 23.4 | 34.6 | 8.4 | 13.9 | 21.1 | 27.6 | 40.5 | 9.2 | 15.3 | 23.6 | 31.7 | 46.6 |
| | 406 | 4.5[3] | 7.9[4] | 13.1 | 17.7 | 27.1 | 6.0[3] | 10.3 | 16.5 | 22.1 | 33.3 | 7.0[4] | 12.3 | 19.7 | 26.2 | 39.1 | 7.7 | 13.6 | 22.1 | 30.2 | 45.1 |
| | 610 | 2.4[2] | 5.6[3] | 11.1[3] | 15.5[4] | 25.0 | 3.6[3] | 7.7[3] | 14.3[4] | 19.8 | 31.1 | 4.5[3] | 9.5[4] | 17.1 | 23.6 | 36.5 | 5.1[3] | 10.6[4] | 19.3 | 27.3 | 42.2 |
| 4.40 | 305 | 4.4[3] | 7.4[4] | 11.7 | 15.7 | 23.7 | 5.7[3] | 9.6 | 14.7 | 19.5 | 29.1 | 6.8[4] | 11.5 | 17.5 | 23.1 | 34.3 | 7.5 | 12.9 | 20.1 | 26.7 | 39.6 |
| | 406 | 3.2[3] | 6.1[3] | 10.6[4] | 14.5 | 22.6 | 4.4[3] | 8.1[3] | 13.4 | 18.2 | 27.9 | 5.3[3] | 9.8[4] | 16.0 | 21.7 | 32.8 | 6.0[3] | 11.1 | 18.5 | 25.1 | 38.0 |
| | 610 | 1.1[2] | 3.8[2] | 8.6[3] | 12.4[3] | 20.4[4] | 2.0[2] | 5.6[3] | 11.2[3] | 15.9[3] | 25.6 | 2.8[2] | 7.0[3] | 13.5[3] | 19.0[4] | 30.2 | 3.3[3] | 8.0[3] | 15.6[3] | 22.1 | 35.1 |
| 4.80 | 305 | 3.2[3] | 5.8[3] | 9.6[4] | 13.0 | 19.9 | 4.3[3] | 7.7[4] | 12.1 | 16.3 | 24.6 | 5.3[3] | 9.3[4] | 14.5 | 19.4 | 29.1 | 5.9[3] | 10.7 | 16.8 | 22.5 | 33.8 |
| | 406 | 2.1[2] | 4.5[3] | 8.5[3] | 11.8[3] | 18.8 | 3.0[2] | 6.2[3] | 10.9[3] | 15.0[4] | 23.4 | 3.8[3] | 7.7[3] | 13.1[4] | 17.9 | 27.6 | 4.4[3] | 8.9[3] | 15.2[4] | 20.8 | 32.2 |
| | 610 | | 2.3[2] | 6.5[2] | 9.8[3] | 16.7[3] | 0.7[1] | 3.8[2] | 8.7[3] | 12.7[3] | 21.1[4] | 1.3[2] | 4.9[2] | 10.5[3] | 15.3[3] | 25.0 | 1.7[2] | 5.8[3] | 12.3[3] | 17.9[3] | 29.2 |
| 5.20 | 305 | 2.3[2] | 4.5[3] | 7.9[3] | 10.8[4] | 16.8 | 3.2[3] | 6.0[3] | 10.0[3] | 13.6[4] | 20.9 | 4.0[3] | 7.4[3] | 12.0[4] | 16.3 | 24.8 | 4.6[3] | 8.6[4] | 13.9[4] | 19.0 | 28.9 |
| | 406 | 1.2[1] | 3.2[2] | 6.8[3] | 9.7[3] | 15.7[4] | 1.9[2] | 4.7[2] | 8.8[3] | 12.4[3] | 19.7 | 2.6[2] | 5.8[3] | 10.6[3] | 14.9[4] | 23.3 | 3.0[2] | 6.8[3] | 12.4[3] | 17.3[4] | 27.3 |
| | 610 | | 1.1[1] | 4.9[2] | 7.7[2] | 13.7[3] | | 2.3[1] | 6.7[2] | 10.2[2] | 17.4[3] | 0.1[1] | 3.1[2] | 8.2[2] | 12.3[3] | 20.7[3] | 0.4[1] | 3.8[2] | 9.6[2] | 14.5[3] | 24.4[4] |
| 5.60 | 305 | 1.5[2] | 3.4[2] | 6.5[3] | 9.0[3] | 14.3[4] | 2.2[2] | 4.7[3] | 8.3[3] | 11.4[3] | 17.8 | 3.0[2] | 5.8[3] | 10.0[3] | 13.7[4] | 21.2 | 3.4[2] | 6.8[3] | 11.6[3] | 16.0 | 24.8 |
| | 406 | 0.4[1] | 2.2[2] | 5.4[2] | 7.9[3] | 13.1[3] | 1.0[1] | 3.4[2] | 7.1[2] | 10.2[3] | 16.6[3] | 1.6[2] | 4.3[2] | 8.6[3] | 12.3[3] | 19.7[4] | 1.9[2] | 5.1[3] | 10.1[3] | 14.4[3] | 23.2 |
| | 610 | | 0.2[1] | 3.6[1] | 6.0[2] | 11.2[2] | | 1.1[1] | 5.1[1] | 8.1[2] | 14.4[3] | | 1.7[1] | 6.3[2] | 9.9[2] | 17.2[3] | | 2.2[2] | 7.4[2] | 11.7[3] | 20.3[3] |
| 6.00 | 305 | 0.9[1] | 2.5[2] | 5.3[2] | 7.5[3] | 12.1[3] | 1.5[1] | 3.6[2] | 6.8[3] | 9.6[3] | 15.2[4] | 2.1[2] | 4.5[2] | 8.3[3] | 11.6[3] | 18.2 | 2.5[2] | 5.3[3] | 9.7[3] | 13.6[3] | 21.3 |
| | 406 | | 1.4[1] | 4.3[2] | 6.4[2] | 11.1[3] | 0.3[1] | 2.4[1] | 5.7[2] | 8.4[2] | 14.1[3] | 0.7[1] | 3.1[2] | 7.0[2] | 10.2[3] | 16.8[3] | 1.0[1] | 3.7[2] | 8.2[2] | 12.0[3] | 19.8[4] |
| | 610 | | | 2.5[1] | 4.6[1] | 9.2[2] | | 0.2[1] | 3.8[1] | 6.4[1] | 12.0[2] | | 0.7[1] | 4.7[1] | 7.9[2] | 14.3[3] | | 0.9[1] | 5.7[1] | 9.4[2] | 17.0[3] |

[1] Deflection meets L/120 [3] Deflection meets L/360

[2] Deflection meets L/240 [4] Deflection meets L/600

If no note, deflection meets L/720

Bailey Metal Products, Dass Metal Products, DCM Metal Corp., EB Metal Inc., Imperial Building Products, Manugypse, Groupe UP, Trebor Building Products Ltd.

# COMBINED AXIAL AND LATERAL LOAD TABLE

Limiting Factored Axial Compressive Resistance Per Stud (kN)

## 1.00 kPa Factored Lateral Load

| Wall Height (m) | Stud Spacing (mm) | 362S162 | | | | | 362S200 | | | | | 362S250 | | | | | 362S300 | | | | |
|---|---|---|---|---|---|---|---|---|---|---|---|---|---|---|---|---|---|---|---|---|---|
| | | 230 MPa | | 345 MPa | | | 230 MPa | | 345 MPa | | | 230 MPa | | 345 MPa | | | 230 MPa | | 345 MPa | | |
| | | 33 | 43 | 54 | 68 | 97 | 33 | 43 | 54 | 68 | 97 | 33 | 43 | 54 | 68 | 97 | 33 | 43 | 54 | 68 | 97 |
| 2.40 | 305 | 9.6 | 14.5 | 24.4 | 32.4 | 48.8 | 11.8 | 18.4 | 30.8 | 40.5 | 59.5 | 13.0 | 21.1 | 34.7 | 47.3 | 68.6 | 13.8 | 21.7 | 35.2 | 49.8 | 75.7 |
| | 406 | 8.4 | 13.3 | 23.2 | 31.2 | 47.7 | 10.5 | 17.1 | 29.5 | 39.2 | 58.3 | 11.7 | 19.6 | 33.3 | 45.9 | 67.3 | 12.5 | 20.3 | 33.8 | 48.4 | 74.3 |
| | 610 | 6.1 | 10.9 | 21.0 | 28.9 | 45.5 | 8.0 | 14.5 | 27.0 | 36.7 | 56.0 | 9.2 | 16.9 | 30.7 | 43.1 | 64.7 | 9.9 | 17.6 | 31.3 | 45.7 | 71.7 |
| 2.80 | 305 | 7.7 | 12.3 | 21.1 | 28.2 | 43.1 | 9.7 | 15.8 | 26.7 | 35.4 | 52.6 | 10.9 | 18.4 | 30.8 | 41.4 | 60.8 | 11.6 | 19.1 | 31.4 | 44.5 | 68.9 |
| | 406 | 6.2 | 10.8 | 19.6 | 26.7 | 41.7 | 8.0 | 14.1 | 25.0 | 33.7 | 51.0 | 9.2 | 16.6 | 29.0 | 39.5 | 59.1 | 10.0 | 17.3 | 29.7 | 42.7 | 67.1 |
| | 610 | 3.5[3] | 7.9[4] | 16.9 | 23.9 | 38.9 | 5.0[3] | 10.9 | 21.9 | 30.6 | 48.1 | 6.1[4] | 13.1 | 25.6 | 36.1 | 55.7 | 6.8[4] | 13.8 | 26.4 | 39.2 | 63.5 |
| 3.20 | 305 | 5.8[4] | 10.0 | 17.6 | 23.8 | 36.9 | 7.5 | 13.0 | 22.4 | 29.9 | 45.2 | 8.7 | 15.5 | 26.4 | 35.2 | 52.5 | 9.4 | 16.3 | 27.3 | 38.6 | 59.9 |
| | 406 | 4.1[3] | 8.2[4] | 15.9 | 22.0 | 35.2 | 5.6[3] | 11.0 | 20.4 | 28.0 | 43.3 | 6.7[4] | 13.3 | 24.3 | 33.0 | 50.4 | 7.4[4] | 14.1 | 25.2 | 36.3 | 57.7 |
| | 610 | 1.1[2] | 4.9[3] | 12.8[3] | 18.8[4] | 31.9 | 2.3[3] | 7.4[3] | 17.0[4] | 24.4 | 39.9 | 3.2[3] | 9.3[3] | 20.3[4] | 29.0 | 46.4 | 3.8[3] | 10.0[4] | 21.4 | 32.2 | 53.5 |
| 3.60 | 305 | 4.0[3] | 7.7[4] | 14.1 | 19.4 | 30.6 | 5.4[3] | 10.2[4] | 18.1 | 24.5 | 37.7 | 6.5[4] | 12.4 | 21.5 | 29.0 | 44.1 | 7.2[4] | 13.4 | 23.4 | 32.7 | 50.7 |
| | 406 | 2.2[2] | 5.7[3] | 12.3[3] | 17.5[4] | 28.7 | 3.4[3] | 8.1[3] | 16.0[4] | 22.4 | 35.7 | 4.4[3] | 10.0[4] | 19.2 | 26.7 | 41.8 | 5.0[3] | 10.9[4] | 21.0 | 30.2 | 48.2 |
| | 610 | | 2.3[2] | 9.1[3] | 14.2[3] | 25.3[4] | | 4.3[2] | 12.4[3] | 18.7[3] | 32.0 | 0.6[2] | 5.7[3] | 15.1[3] | 22.5[4] | 37.6 | 1.1[2] | 6.4[3] | 16.7[3] | 25.7[4] | 43.6 |
| 4.00 | 305 | 2.4[2] | 5.6[3] | 11.1[3] | 15.5[4] | 25.0 | 3.6[3] | 7.7[3] | 14.3[4] | 19.8 | 31.1 | 4.5[3] | 9.5[4] | 17.1 | 23.6 | 36.5 | 5.1[3] | 10.6[4] | 19.3 | 27.3 | 42.2 |
| | 406 | 0.6[2] | 3.6[2] | 9.3[3] | 13.6[3] | 23.1[4] | 1.5[2] | 5.5[3] | 12.2[3] | 17.7[3] | 29.0 | 2.3[2] | 7.0[3] | 14.8[3] | 21.2[4] | 34.1 | 2.8[3] | 7.9[3] | 16.8[3] | 24.6 | 39.6 |
| | 610 | | 0.1[1] | 6.1[2] | 10.3[2] | 19.7[3] | | 1.7[2] | 8.7[2] | 14.0[3] | 25.3[3] | | 2.7[2] | 10.7[3] | 17.0[3] | 29.8[4] | | 3.3[2] | 12.4[3] | 20.0[3] | 34.9[4] |
| 4.40 | 305 | 1.1[2] | 3.8[2] | 8.6[3] | 12.4[3] | 20.4[4] | 2.0[2] | 5.6[3] | 11.2[3] | 15.9[3] | 25.6 | 2.8[2] | 7.0[3] | 13.5[3] | 19.0[4] | 30.2 | 3.3[3] | 8.0[3] | 15.6[3] | 22.1 | 35.1 |
| | 406 | | 1.8[2] | 6.8[2] | 10.5[3] | 18.5[3] | | 3.4[2] | 9.2[3] | 13.8[3] | 23.5[3] | 0.5[2] | 4.5[2] | 11.2[3] | 16.7[3] | 27.8[4] | 0.9[2] | 5.3[3] | 13.1[3] | 19.5[3] | 32.5 |
| | 610 | | | 3.7[1] | 7.3[2] | 15.2[2] | | | 5.8[2] | 10.3[2] | 19.9[3] | | 0.3[1] | 7.3[2] | 12.6[2] | 23.5[3] | | 0.6[2] | 8.7[2] | 15.0[3] | 27.8[3] |
| 4.80 | 305 | | 2.3[2] | 6.5[2] | 9.8[3] | 16.7[3] | 0.7[1] | 3.8[2] | 8.7[3] | 12.7[3] | 21.1[4] | 1.3[2] | 4.9[2] | 10.5[3] | 15.3[3] | 25.0 | 1.7[2] | 5.8[3] | 12.3[3] | 17.9[3] | 29.2 |
| | 406 | | 0.4[1] | 4.8[1] | 8.0[2] | 14.9[3] | | 1.7[1] | 6.8[2] | 10.7[2] | 19.1[3] | | 2.5[2] | 8.4[2] | 13.1[3] | 22.6[3] | | 3.0[2] | 9.9[2] | 15.4[3] | 26.6[4] |
| | 610 | | | 1.9[1] | 4.8[1] | 11.6[2] | | | 3.5[1] | 7.3[1] | 15.5[2] | | | 4.6[1] | 9.1[2] | 18.5[3] | | | 5.6[1] | 11.0[2] | 22.0[3] |
| 5.20 | 305 | | 1.1[1] | 4.9[2] | 7.7[2] | 13.7[3] | | 2.3[1] | 6.7[2] | 10.2[2] | 17.4[3] | 0.1[1] | 3.1[2] | 8.2[2] | 12.3[3] | 20.7[3] | 0.4[1] | 3.8[2] | 9.6[2] | 14.5[3] | 24.4[4] |
| | 406 | | | 3.2[1] | 5.9[1] | 11.9[2] | | 0.3[1] | 4.8[1] | 8.2[2] | 15.5[3] | | 0.8[1] | 6.1[2] | 10.2[2] | 18.4[3] | | 1.2[1] | 7.2[2] | 12.0[2] | 21.8[3] |
| | 610 | | | 0.4[1] | 3.0[1] | 8.8[1] | | | 1.7[1] | 5.0[1] | 12.1[2] | | | 2.5[1] | 6.4[1] | 14.4[2] | | | 3.2[1] | 7.8[1] | 17.4[2] |
| 5.60 | 305 | | 0.2[1] | 3.6[1] | 6.0[2] | 11.2[2] | | 1.1[1] | 5.1[1] | 8.1[2] | 14.4[3] | | 1.7[1] | 6.3[2] | 9.9[2] | 17.2[3] | | 2.2[2] | 7.4[2] | 11.7[3] | 20.3[3] |
| | 406 | | | 2.0[1] | 4.3[1] | 9.5[2] | | | 3.3[1] | 6.3[1] | 12.6[2] | | | 4.3[1] | 7.8[2] | 15.0[2] | | | 5.2[1] | 9.3[2] | 17.9[3] |
| | 610 | | | | 1.5[1] | 6.6[1] | | | 0.3[1] | 3.1[1] | 9.3[1] | | | 0.9[1] | 4.2[1] | 11.1[1] | | | 1.3[1] | 5.3[1] | 13.6[2] |
| 6.00 | 305 | | | 2.5[1] | 4.6[1] | 9.2[2] | | 0.2[1] | 3.8[1] | 6.4[1] | 12.0[2] | | 0.7[1] | 4.7[1] | 7.9[2] | 14.3[3] | | 0.9[1] | 5.7[1] | 9.4[2] | 17.0[3] |
| | 406 | | | 1.0[1] | 3.0[1] | 7.5[1] | | | 2.1[1] | 4.6[1] | 10.2[1] | | | 2.8[1] | 5.9[1] | 12.2[2] | | | 3.5[1] | 7.1[1] | 14.6[2] |
| | 610 | | | | 0.3[1] | 4.7[1] | | | | 1.7[1] | 7.1[1] | | | | 2.5[1] | 8.5[1] | | | | 3.2[1] | 10.5[1] |

[1] Deflection meets L/120 [3] Deflection meets L/360

[2] Deflection meets L/240 [4] Deflection meets L/600

If no note, deflection meets L/720

Bailey Metal Products, Dass Metal Products, DCM Metal Corp., EB Metal Inc., Imperial Building Products, Manugypse, Groupe UP, Trebor Building Products Ltd.

# COMBINED AXIAL AND LATERAL LOAD TABLE

Limiting Factored Axial Compressive Resistance Per Stud (kN)

## 1.50 kPa Factored Lateral Load

| Wall Height (m) | Stud Spacing (mm) | 362S162 | | | | | 362S200 | | | | | 362S250 | | | | | 362S300 | | | | |
|---|---|---|---|---|---|---|---|---|---|---|---|---|---|---|---|---|---|---|---|---|---|
| | | 230 MPa | | 345 MPa | | | 230 MPa | | 345 MPa | | | 230 MPa | | 345 MPa | | | 230 MPa | | 345 MPa | | |
| | | 33 | 43 | 54 | 68 | 97 | 33 | 43 | 54 | 68 | 97 | 33 | 43 | 54 | 68 | 97 | 33 | 43 | 54 | 68 | 97 |
| 2.40 | 305 | 7.8 | 12.7 | 22.6 | 30.6 | 47.1 | 9.8 | 16.4 | 28.9 | 38.6 | 57.7 | 11.1 | 18.9 | 32.7 | 45.2 | 66.6 | 11.8 | 19.6 | 33.2 | 47.7 | 73.7 |
| | 406 | 6.1 | 10.9 | 21.0 | 28.9 | 45.5 | 8.0 | 14.5 | 27.0 | 36.7 | 56.0 | 9.2 | 16.9 | 30.7 | 43.1 | 64.7 | 9.9 | 17.6 | 31.3 | 45.7 | 71.7 |
| | 610 | 3.0[3] | 7.7[4] | 17.8 | 25.6 | 42.4 | 4.6[4] | 10.9 | 23.5 | 33.2 | 52.7 | 5.7[4] | 13.0 | 26.9 | 39.2 | 61.0 | 6.4 | 13.7 | 27.6 | 41.8 | 67.9 |
| 2.80 | 305 | 5.5[4] | 10.0 | 18.9 | 26.0 | 40.9 | 7.3 | 13.3 | 24.2 | 32.9 | 50.3 | 8.4 | 15.7 | 28.1 | 38.7 | 58.2 | 9.2 | 16.4 | 28.9 | 41.8 | 66.2 |
| | 406 | 3.5[3] | 7.9[4] | 16.9 | 23.9 | 38.9 | 5.0[3] | 10.9 | 21.9 | 30.6 | 48.1 | 6.1[4] | 13.1 | 25.6 | 36.1 | 55.7 | 6.8[4] | 13.8 | 26.4 | 39.2 | 63.5 |
| | 610 | | 4.0[3] | 13.1[3] | 20.0[4] | 35.0 | 1.0[3] | 6.6[3] | 17.7[4] | 26.3 | 43.9 | 2.0[3] | 8.4[3] | 20.9[4] | 31.3 | 51.0 | 2.5[3] | 9.0[4] | 21.9 | 34.2 | 58.5 |
| 3.20 | 305 | 3.3[3] | 7.3[3] | 15.1[4] | 21.2 | 34.3 | 4.8[3] | 10.1[4] | 19.5 | 27.0 | 42.4 | 5.8[3] | 12.2 | 23.2 | 32.0 | 49.4 | 6.5[4] | 13.0 | 24.2 | 35.3 | 56.6 |
| | 406 | 1.1[2] | 4.9[3] | 12.8[3] | 18.8[4] | 31.9 | 2.3[3] | 7.4[3] | 17.0[4] | 24.4 | 39.9 | 3.2[3] | 9.3[3] | 20.3[4] | 29.0 | 46.4 | 3.8[3] | 10.0[4] | 21.4 | 32.2 | 53.5 |
| | 610 | | 0.7[2] | 8.7[2] | 14.5[3] | 27.6[3] | | 2.7[2] | 12.4[3] | 19.7[3] | 35.2[4] | | 4.0[3] | 15.2[3] | 23.7[3] | 41.1 | | 4.6[3] | 16.2[3] | 26.6[4] | 47.7 |
| 3.60 | 305 | 1.4[2] | 4.8[3] | 11.5[3] | 16.6[4] | 27.8 | 2.5[3] | 7.1[3] | 15.1[3] | 21.5[4] | 34.8 | 3.4[3] | 8.8[3] | 18.1[4] | 25.6 | 40.7 | 4.0[3] | 9.7[4] | 19.9[4] | 29.0 | 47.0 |
| | 406 | | 2.3[2] | 9.1[3] | 14.2[3] | 25.3[4] | | 4.3[2] | 12.4[3] | 18.7[3] | 32.0 | 0.6[2] | 5.7[3] | 15.1[3] | 22.5[4] | 37.6 | 1.1[2] | 6.4[3] | 16.7[3] | 25.7[4] | 43.6 |
| | 610 | | | 5.0[2] | 9.8[2] | 20.9[3] | | | 7.8[2] | 13.9[2] | 27.2[3] | | 0.3[2] | 9.9[2] | 17.1[3] | 31.9[3] | | 0.7[2] | 11.1[2] | 19.8[3] | 37.5[4] |
| 4.00 | 305 | | 2.7[2] | 8.4[3] | 12.8[3] | 22.2[3] | 0.6[2] | 4.5[2] | 11.3[3] | 16.7[3] | 28.0[4] | 1.3[2] | 5.9[3] | 13.7[3] | 20.1[4] | 33.0 | 1.7[2] | 6.7[3] | 15.6[3] | 23.4[4] | 38.4 |
| | 406 | | 0.1[1] | 6.1[2] | 10.3[2] | 19.7[3] | | 1.7[2] | 8.7[2] | 14.0[3] | 25.3[3] | | 2.7[2] | 10.7[3] | 17.0[3] | 29.8[4] | | 3.3[2] | 12.4[3] | 20.0[3] | 34.9[4] |
| | 610 | | | 2.1[1] | 6.1[1] | 15.3[2] | | | 4.2[1] | 9.3[2] | 20.5[2] | | | 5.6[2] | 11.7[2] | 24.2[3] | | | 6.7[2] | 14.0[2] | 28.8[3] |
| 4.40 | 305 | | 0.9[1] | 6.0[2] | 9.6[2] | 17.7[3] | | 2.4[2] | 8.3[2] | 12.9[3] | 22.6[3] | | 3.4[2] | 10.2[3] | 15.6[3] | 26.6[4] | | 4.0[2] | 11.9[3] | 18.3[3] | 31.3[4] |
| | 406 | | | 3.7[1] | 7.3[2] | 15.2[2] | | | 5.8[2] | 10.3[2] | 19.9[3] | | 0.3[1] | 7.3[2] | 12.6[2] | 23.5[3] | | 0.6[2] | 8.7[2] | 15.0[3] | 27.8[3] |
| | 610 | | | | 3.2[1] | 11.0[1] | | | 1.4[1] | 5.7[1] | 15.2[2] | | | 2.4[1] | 7.5[1] | 18.1[2] | | | 3.1[1] | 9.2[2] | 21.8[2] |
| 4.80 | 305 | | | 4.0[1] | 7.1[2] | 14.0[2] | | 0.7[1] | 5.9[2] | 9.8[2] | 18.1[3] | | 1.4[1] | 7.4[2] | 12.0[2] | 21.5[3] | | 1.8[2] | 8.7[2] | 14.2[3] | 25.4[3] |
| | 406 | | | 1.9[1] | 4.8[1] | 11.6[2] | | | 3.5[1] | 7.3[1] | 15.5[2] | | | 4.6[1] | 9.1[2] | 18.5[3] | | | 5.6[1] | 11.0[2] | 22.0[3] |
| | 610 | | | | 0.9[1] | 7.6[1] | | | | 3.0[1] | 11.1[1] | | | | 4.2[1] | 13.2[2] | | | 0.3[1] | 5.4[1] | 16.2[2] |
| 5.20 | 305 | | | 2.5[1] | 5.1[1] | 11.1[2] | | | 4.0[1] | 7.4[1] | 14.6[2] | | | 5.1[1] | 9.1[2] | 17.3[3] | | | 6.2[1] | 10.9[2] | 20.6[3] |
| | 406 | | | 0.4[1] | 3.0[1] | 8.8[1] | | | 1.7[1] | 5.0[1] | 12.1[2] | | | 2.5[1] | 6.4[1] | 14.4[2] | | | 3.2[1] | 7.8[1] | 17.4[2] |
| | 610 | | | | | 4.9[1] | | | | 0.9[1] | 7.8[1] | | | | 1.7[1] | 9.4[1] | | | | 2.5[1] | 11.8[1] |
| 5.60 | 305 | | | 1.3[1] | 3.6[1] | 8.7[1] | | | 2.5[1] | 5.4[1] | 11.7[2] | | | 3.4[1] | 6.8[1] | 13.9[2] | | | 4.1[1] | 8.2[2] | 16.7[2] |
| | 406 | | | | 1.5[1] | 6.6[1] | | | 0.3[1] | 3.1[1] | 9.3[1] | | | 0.9[1] | 4.2[1] | 11.1[1] | | | 1.3[1] | 5.3[1] | 13.6[2] |
| | 610 | | | | | 2.9[1] | | | | | 5.2[1] | | | | | 6.3[1] | | | | 0.2[1] | 8.2[1] |
| 6.00 | 305 | | | 0.3[1] | 2.3[1] | 6.8[1] | | | 1.3[1] | 3.8[1] | 9.3[1] | | | 2.0[1] | 5.0[1] | 11.2[2] | | | 2.5[1] | 6.1[1] | 13.5[2] |
| | 406 | | | | 0.3[1] | 4.7[1] | | | | 1.7[1] | 7.1[1] | | | | 2.5[1] | 8.5[1] | | | | 3.2[1] | 10.5[1] |
| | 610 | | | | | 1.3[1] | | | | | 3.2[1] | | | | | 3.9[1] | | | | | 5.4[1] |

[1] Deflection meets L/120 [3] Deflection meets L/360

[2] Deflection meets L/240 [4] Deflection meets L/600

If no note, deflection meets L/720

Bailey Metal Products, Dass Metal Products, DCM Metal Corp., EB Metal Inc., Imperial Building Products, Manugypse, Groupe UP, Trebor Building Products Ltd.

# COMBINED AXIAL AND LATERAL LOAD TABLE

Limiting Factored Axial Compressive Resistance Per Stud (kN)

## 2.00 kPa Factored Lateral Load

| Wall Height (m) | Stud Spacing (mm) | 362S162 | | | | | 362S200 | | | | | 362S250 | | | | | 362S300 | | | | |
|---|---|---|---|---|---|---|---|---|---|---|---|---|---|---|---|---|---|---|---|---|---|
| | | 230 MPa | | 345 MPa | | | 230 MPa | | 345 MPa | | | 230 MPa | | 345 MPa | | | 230 MPa | | 345 MPa | | |
| | | 33 | 43 | 54 | 68 | 97 | 33 | 43 | 54 | 68 | 97 | 33 | 43 | 54 | 68 | 97 | 33 | 43 | 54 | 68 | 97 |
| 2.40 | 305 | 6.1 | 10.9 | 21.0 | 28.9 | 45.5 | 8.0 | 14.5 | 27.0 | 36.7 | 56.0 | 9.2 | 16.9 | 30.7 | 43.1 | 64.7 | 9.9 | 17.6 | 31.3 | 45.7 | 71.7 |
| | 406 | 4.0[3] | 8.7 | 18.8 | 26.7 | 43.4 | 5.7[4] | 12.1 | 24.6 | 34.4 | 53.8 | 6.8 | 14.3 | 28.1 | 40.5 | 62.2 | 7.5 | 15.0 | 28.8 | 43.0 | 69.1 |
| | 610 | 0.1[3] | 4.6[3] | 14.8[4] | 22.6 | 39.4 | 1.4[3] | 7.6[4] | 20.1 | 29.8 | 49.5 | 2.4[3] | 9.4[4] | 23.3 | 35.4 | 57.4 | 3.0[3] | 10.0 | 24.2 | 38.0 | 64.1 |
| 2.80 | 305 | 3.5[3] | 7.9[4] | 16.9 | 23.9 | 38.9 | 5.0[3] | 10.9 | 21.9 | 30.6 | 48.1 | 6.1[4] | 13.1 | 25.6 | 36.1 | 55.7 | 6.8[4] | 13.8 | 26.4 | 39.2 | 63.5 |
| | 406 | 1.0[3] | 5.2[3] | 14.3[3] | 21.2 | 36.2 | 2.3[3] | 8.0[3] | 19.1[4] | 27.7 | 45.3 | 3.3[3] | 9.9[4] | 22.4 | 32.8 | 52.5 | 3.9[3] | 10.6 | 23.4 | 35.8 | 60.1 |
| | 610 | | 0.5[2] | 9.7[3] | 16.4[3] | 31.4[4] | | 2.8[3] | 13.9[3] | 22.3[3] | 40.1 | | 4.1[3] | 16.7[3] | 26.9[4] | 46.6 | | 4.7[3] | 17.7[3] | 29.7 | 53.8 |
| 3.20 | 305 | 1.1[2] | 4.9[3] | 12.8[3] | 18.8[4] | 31.9 | 2.3[3] | 7.4[3] | 17.0[4] | 24.4 | 39.9 | 3.2[3] | 9.3[3] | 20.3[4] | 29.0 | 46.4 | 3.8[3] | 10.0[4] | 21.4 | 32.2 | 53.5 |
| | 406 | | 2.0[2] | 10.0[3] | 15.9[3] | 29.0[4] | | 4.2[3] | 13.8[3] | 21.2[3] | 36.7 | 0.1[2] | 5.7[3] | 16.8[3] | 25.4[4] | 42.8 | 0.6[2] | 6.3[3] | 17.9[3] | 28.4 | 49.6 |
| | 610 | | | 5.1[2] | 10.7[2] | 23.7[3] | | | 8.3[2] | 15.5[3] | 31.0[3] | | | 10.6[2] | 19.0[3] | 36.2[4] | | | 11.5[3] | 21.6[3] | 42.4[4] |
| 3.60 | 305 | | 2.3[2] | 9.1[3] | 14.2[3] | 25.3[4] | | 4.3[2] | 12.4[3] | 18.7[3] | 32.0 | 0.6[2] | 5.7[3] | 15.1[3] | 22.5[4] | 37.6 | 1.1[2] | 6.4[3] | 16.7[3] | 25.7[4] | 43.6 |
| | 406 | | | 6.3[2] | 11.2[2] | 22.3[3] | | 1.0[2] | 9.3[2] | 15.5[3] | 28.7[3] | | 2.0[2] | 11.5[3] | 18.8[3] | 33.7[4] | | 2.5[2] | 12.9[3] | 21.7[3] | 39.5 |
| | 610 | | | 1.4[1] | 6.0[1] | 16.9[2] | | | 3.8[1] | 9.7[2] | 22.9[3] | | | 5.3[2] | 12.3[2] | 26.9[3] | | | 6.2[2] | 14.6[2] | 32.0[3] |
| 4.00 | 305 | | 0.1[1] | 6.1[2] | 10.3[2] | 19.7[3] | | 1.7[2] | 8.7[2] | 14.0[3] | 25.3[3] | | 2.7[2] | 10.7[3] | 17.0[3] | 29.8[4] | | 3.3[2] | 12.4[3] | 20.0[3] | 34.9[4] |
| | 406 | | | 3.3[1] | 7.4[2] | 16.7[2] | | | 5.6[1] | 10.8[2] | 22.0[3] | | | 7.2[2] | 13.4[2] | 26.0[3] | | | 8.5[2] | 15.9[3] | 30.7[3] |
| | 610 | | | | 2.4[1] | 11.5[1] | | | 0.3[1] | 5.2[1] | 16.3[2] | | | 1.2[1] | 7.0[1] | 19.3[2] | | | 1.8[1] | 8.8[2] | 23.4[2] |
| 4.40 | 305 | | | 3.7[1] | 7.3[2] | 15.2[2] | | | 5.8[2] | 10.3[2] | 19.9[3] | | 0.3[1] | 7.3[2] | 12.6[2] | 23.5[3] | | 0.6[2] | 8.7[2] | 15.0[3] | 27.8[3] |
| | 406 | | | 1.1[1] | 4.4[1] | 12.3[2] | | | 2.8[1] | 7.1[1] | 16.7[2] | | | 3.9[1] | 9.1[2] | 19.8[2] | | | 4.9[1] | 11.0[2] | 23.7[3] |
| | 610 | | | | | 7.3[1] | | | | 1.8[1] | 11.1[1] | | | | 3.0[1] | 13.3[1] | | | | 4.2[1] | 16.5[2] |
| 4.80 | 305 | | | 1.9[1] | 4.8[1] | 11.6[2] | | | 3.5[1] | 7.3[1] | 15.5[2] | | | 4.6[1] | 9.1[2] | 18.5[3] | | | 5.6[1] | 11.0[2] | 22.0[3] |
| | 406 | | | | 2.2[1] | 8.9[1] | | | 0.7[1] | 4.3[1] | 12.5[1] | | | 1.4[1] | 5.7[1] | 14.9[2] | | | 2.0[1] | 7.2[1] | 18.0[2] |
| | 610 | | | | | 4.1[1] | | | | | 7.2[1] | | | | | 8.7[1] | | | | 0.7[1] | 11.2[1] |
| 5.20 | 305 | | | 0.4[1] | 3.0[1] | 8.8[1] | | | 1.7[1] | 5.0[1] | 12.1[2] | | | 2.5[1] | 6.4[1] | 14.4[2] | | | 3.2[1] | 7.8[1] | 17.4[2] |
| | 406 | | | | 0.4[1] | 6.2[1] | | | | 2.1[1] | 9.1[1] | | | | 3.1[1] | 11.0[1] | | | | 4.2[1] | 13.5[2] |
| | 610 | | | | | 1.6[1] | | | | | 4.1[1] | | | | | 5.1[1] | | | | | 7.0[1] |
| 5.60 | 305 | | | | 1.5[1] | 6.6[1] | | | 0.3[1] | 3.1[1] | 9.3[1] | | | 0.9[1] | 4.2[1] | 11.1[1] | | | 1.3[1] | 5.3[1] | 13.6[2] |
| | 406 | | | | | 4.0[1] | | | | 0.4[1] | 6.5[1] | | | | 1.1[1] | 7.8[1] | | | | 1.8[1] | 9.9[1] |
| | 610 | | | | | | | | | | 1.8[1] | | | | | 2.2[1] | | | | | 3.6[1] |
| 6.00 | 305 | | | | 0.3[1] | 4.7[1] | | | | 1.7[1] | 7.1[1] | | | | 2.5[1] | 8.5[1] | | | | 3.2[1] | 10.5[1] |
| | 406 | | | | | 2.4[1] | | | | | 4.4[1] | | | | | 5.4[1] | | | | | 7.0[1] |
| | 610 | | | | | | | | | | | | | | | | | | | | 1.0[1] |

[1] Deflection meets L/120 [3] Deflection meets L/360

[2] Deflection meets L/240 [4] Deflection meets L/600

If no note, deflection meets L/720

Bailey Metal Products, Dass Metal Products, DCM Metal Corp., EB Metal Inc., Imperial Building Products, Manugypse, Groupe UP, Trebor Building Products Ltd.

# COMBINED AXIAL AND LATERAL LOAD TABLE

Limiting Factored Axial Compressive Resistance Per Stud (kN)

## 2.50 kPa Factored Lateral Load

| Wall Height (m) | Stud Spacing (mm) | 362S162 | | | | | 362S200 | | | | | 362S250 | | | | | 362S300 | | | | |
|---|---|---|---|---|---|---|---|---|---|---|---|---|---|---|---|---|---|---|---|---|---|
| | | 230 MPa | | 345 MPa | | | 230 MPa | | 345 MPa | | | 230 MPa | | 345 MPa | | | 230 MPa | | 345 MPa | | |
| | | 33 | 43 | 54 | 68 | 97 | 33 | 43 | 54 | 68 | 97 | 33 | 43 | 54 | 68 | 97 | 33 | 43 | 54 | 68 | 97 |
| 2.40 | 305 | 4.5[4] | 9.3 | 19.4 | 27.2 | 43.9 | 6.2 | 12.7 | 25.2 | 34.9 | 54.3 | 7.4 | 14.9 | 28.8 | 41.1 | 62.8 | 8.1 | 15.6 | 29.4 | 43.7 | 69.8 |
| | 406 | 2.0[3] | 6.6[4] | 16.8 | 24.6 | 41.4 | 3.5[3] | 9.8 | 22.3 | 32.0 | 51.6 | 4.6[4] | 11.8 | 25.7 | 37.9 | 59.7 | 5.2[4] | 12.4 | 26.5 | 40.5 | 66.6 |
| | 610 | | 1.7[3] | 12.0[3] | 19.7[4] | 36.5 | | 4.4[3] | 17.0[3] | 26.6 | 46.5 | | 6.0[3] | 19.9[4] | 31.9 | 53.9 | | 6.6[4] | 20.8 | 34.4 | 60.6 |
| 2.80 | 305 | 1.6[3] | 5.9[3] | 14.9[4] | 21.9 | 36.9 | 3.0[3] | 8.7[4] | 19.8 | 28.4 | 46.0 | 4.0[3] | 10.7[4] | 23.2 | 33.6 | 53.3 | 4.6[3] | 11.4 | 24.1 | 36.7 | 61.0 |
| | 406 | | 2.8[3] | 11.9[3] | 18.7[3] | 33.8 | | 5.3[3] | 16.4[3] | 24.9[4] | 42.6 | 0.7[3] | 6.9[3] | 19.5[4] | 29.8 | 49.5 | 1.2[3] | 7.5[3] | 20.4[4] | 32.7 | 56.9 |
| | 610 | | | 6.5[2] | 13.0[3] | 28.0[3] | | | 10.3[3] | 18.7[3] | 36.5[4] | | 0.2[2] | 12.8[3] | 22.8[3] | 42.5 | | 0.6[3] | 13.7[3] | 25.4[3] | 49.3 |
| 3.20 | 305 | | 2.7[2] | 10.7[3] | 16.6[3] | 29.7[4] | | 5.0[3] | 14.6[3] | 22.0[4] | 37.5 | 0.8[2] | 6.6[3] | 17.7[3] | 26.3[4] | 43.7 | 1.4[3] | 7.2[3] | 18.7[4] | 29.3 | 50.5 |
| | 406 | | | 7.5[2] | 13.2[3] | 26.2[3] | | 1.3[2] | 11.0[3] | 18.2[3] | 33.7[4] | | 2.4[2] | 13.6[3] | 22.1[3] | 39.4 | | 2.9[3] | 14.6[3] | 24.9[3] | 45.9 |
| | 610 | | | 1.8[1] | 7.2[2] | 20.1[2] | | | 4.6[2] | 11.6[2] | 27.0[3] | | | 6.4[2] | 14.6[2] | 31.7[3] | | | 7.3[2] | 17.0[3] | 37.5[3] |
| 3.60 | 305 | | | 7.0[2] | 11.9[3] | 23.0[3] | | 1.8[2] | 10.0[2] | 16.3[3] | 29.5[3] | | 2.9[2] | 12.4[3] | 19.7[3] | 34.7[4] | | 3.4[3] | 13.8[3] | 22.7[3] | 40.5 |
| | 406 | | | 3.7[1] | 8.5[2] | 19.5[3] | | | 6.4[2] | 12.5[2] | 25.7[3] | | | 8.3[2] | 15.4[3] | 30.2[3] | | | 9.4[2] | 18.0[3] | 35.6[3] |
| | 610 | | | | 2.6[1] | 13.3[2] | | | 0.1[1] | 5.9[1] | 18.9[2] | | | 1.1[1] | 8.0[2] | 22.4[2] | | | 1.8[1] | 9.9[2] | 27.0[3] |
| 4.00 | 305 | | | 4.0[1] | 8.1[2] | 17.4[2] | | | 6.3[2] | 11.6[2] | 22.8[3] | | | 8.1[2] | 14.2[3] | 26.9[3] | | 0.2[2] | 9.4[2] | 16.9[3] | 31.8[3] |
| | 406 | | | 0.8[1] | 4.8[1] | 14.0[2] | | | 2.8[1] | 7.9[1] | 19.0[2] | | | 4.1[1] | 10.1[2] | 22.5[3] | | | 5.0[1] | 12.2[2] | 26.9[3] |
| | 610 | | | | | 8.0[1] | | | | 1.6[1] | 12.5[1] | | | | 2.9[1] | 14.8[2] | | | | 4.2[1] | 18.5[2] |
| 4.40 | 305 | | | 1.7[1] | 5.1[1] | 13.0[2] | | | 3.5[1] | 7.9[1] | 17.4[2] | | | 4.7[1] | 9.9[2] | 20.7[3] | | | 5.8[1] | 12.0[2] | 24.7[3] |
| | 406 | | | | 1.9[1] | 9.7[1] | | | 0.1[1] | 4.4[1] | 13.8[1] | | | 0.9[1] | 5.9[1] | 16.4[2] | | | 1.5[1] | 7.4[1] | 20.0[2] |
| | 610 | | | | | 4.0[1] | | | | | 7.5[1] | | | | | 9.1[1] | | | | | 11.8[1] |
| 4.80 | 305 | | | | 2.8[1] | 9.5[1] | | | 1.3[1] | 5.0[1] | 13.2[2] | | | 2.1[1] | 6.6[1] | 15.7[2] | | | 2.8[1] | 8.1[1] | 19.0[2] |
| | 406 | | | | | 6.4[1] | | | | 1.7[1] | 9.7[1] | | | | 2.7[1] | 11.6[1] | | | | 3.8[1] | 14.4[2] |
| | 610 | | | | | 1.0[1] | | | | | 3.7[1] | | | | | 4.6[1] | | | | | 6.6[1] |
| 5.20 | 305 | | | | 1.0[1] | 6.8[1] | | | | 2.8[1] | 9.8[1] | | | 0.2[1] | 3.9[1] | 11.8[1] | | | 0.5[1] | 5.0[1] | 14.5[2] |
| | 406 | | | | | 3.8[1] | | | | | 6.5[1] | | | | 0.3[1] | 7.9[1] | | | | 0.9[1] | 10.1[1] |
| | 610 | | | | | | | | | | 0.9[1] | | | | | 1.2[1] | | | | | 2.7[1] |
| 5.60 | 305 | | | | | 4.6[1] | | | | 1.1[1] | 7.2[1] | | | | 1.8[1] | 8.6[1] | | | | 2.6[1] | 10.8[1] |
| | 406 | | | | | 1.8[1] | | | | | 4.0[1] | | | | | 4.9[1] | | | | | 6.6[1] |
| | 610 | | | | | | | | | | | | | | | | | | | | |
| 6.00 | 305 | | | | | 2.9[1] | | | | | 5.0[1] | | | | 0.2[1] | 6.1[1] | | | | 0.7[1] | 7.9[1] |
| | 406 | | | | | 0.2[1] | | | | | 2.0[1] | | | | | 2.6[1] | | | | | 3.9[1] |
| | 610 | | | | | | | | | | | | | | | | | | | | |

[1] Deflection meets L/120 [3] Deflection meets L/360

[2] Deflection meets L/240 [4] Deflection meets L/600

If no note, deflection meets L/720

Bailey Metal Products, Dass Metal Products, DCM Metal Corp., EB Metal Inc., Imperial Building Products, Manugypse, Groupe UP, Trebor Building Products Ltd.

# COMBINED AXIAL AND LATERAL LOAD TABLE

Limiting Factored Axial Compressive Resistance Per Stud (kN)

## 3.00 kPa Factored Lateral Load

| Wall Height (m) | Stud Spacing (mm) | 362S162 | | | | | 362S200 | | | | | 362S250 | | | | | 362S300 | | | | |
|---|---|---|---|---|---|---|---|---|---|---|---|---|---|---|---|---|---|---|---|---|---|
| | | 230 MPa | | 345 MPa | | | 230 MPa | | 345 MPa | | | 230 MPa | | 345 MPa | | | 230 MPa | | 345 MPa | | |
| | | 33 | 43 | 54 | 68 | 97 | 33 | 43 | 54 | 68 | 97 | 33 | 43 | 54 | 68 | 97 | 33 | 43 | 54 | 68 | 97 |
| 2.40 | 305 | 3.0[3] | 7.6[4] | 17.8 | 25.6 | 42.4 | 4.6[4] | 10.9 | 23.5 | 33.2 | 52.7 | 5.7[4] | 13.0 | 26.9 | 39.2 | 61.0 | 6.4 | 13.7 | 27.6 | 41.8 | 67.9 |
| | 406 | 0.1[3] | 4.6[3] | 14.8[4] | 22.6 | 39.4 | 1.4[3] | 7.6[4] | 20.1 | 29.8 | 49.5 | 2.4[3] | 9.4[4] | 23.3 | 35.4 | 57.4 | 3.0[3] | 10.0 | 24.2 | 38.0 | 64.1 |
| | 610 | | | 9.4[3] | 16.9[3] | 33.8[4] | | 1.4[3] | 14.0[3] | 23.6[4] | 43.5 | | 2.7[3] | 16.7[3] | 28.4[4] | 50.5 | | 3.2[3] | 17.6[4] | 30.9 | 57.1 |
| 2.80 | 305 | | 4.0[3] | 13.1[3] | 20.0[4] | 35.0 | 1.0[3] | 6.6[3] | 17.7[4] | 26.3 | 43.9 | 2.0[3] | 8.4[3] | 20.9[4] | 31.3 | 51.0 | 2.5[3] | 9.0[4] | 21.9 | 34.2 | 58.5 |
| | 406 | | 0.5[2] | 9.7[3] | 16.4[3] | 31.4[4] | | 2.8[3] | 13.9[3] | 22.3[3] | 40.1 | | 4.1[3] | 16.7[3] | 26.9[4] | 46.6 | | 4.7[3] | 17.7[3] | 29.7 | 53.8 |
| | 610 | | | 3.6[2] | 9.9[2] | 24.8[3] | | | 7.0[2] | 15.2[3] | 33.0[3] | | | 9.1[2] | 18.9[3] | 38.5[4] | | | 10.0[3] | 21.4[3] | 45.1[4] |
| 3.20 | 305 | | 0.7[2] | 8.7[2] | 14.5[3] | 27.6[3] | | 2.7[2] | 12.4[3] | 19.7[3] | 35.2[4] | | 4.0[3] | 15.2[3] | 23.7[3] | 41.1 | | 4.6[3] | 16.2[3] | 26.6[4] | 47.7 |
| | 406 | | | 5.1[2] | 10.7[2] | 23.7[3] | | | 8.3[2] | 15.5[3] | 31.0[3] | | | 10.6[2] | 19.0[3] | 36.2[4] | | | 11.5[3] | 21.6[3] | 42.4[4] |
| | 610 | | | | 4.0[1] | 16.7[2] | | | 1.2[1] | 8.1[2] | 23.4[2] | | | 2.5[1] | 10.6[2] | 27.5[3] | | | 3.3[2] | 12.7[2] | 32.9[3] |
| 3.60 | 305 | | | 5.0[2] | 9.8[2] | 20.8[3] | | | 7.8[2] | 13.9[2] | 27.2[3] | | 0.3[2] | 9.9[2] | 17.1[3] | 31.9[3] | | 0.6[2] | 11.1[2] | 19.8[3] | 37.5[4] |
| | 406 | | | 1.4[1] | 6.0[1] | 16.9[2] | | | 3.8[1] | 9.7[2] | 22.9[3] | | | 5.3[2] | 12.3[2] | 26.9[3] | | | 6.2[2] | 14.6[2] | 32.0[3] |
| | 610 | | | | | 10.0[1] | | | | 2.4[1] | 15.3[2] | | | | 4.0[1] | 18.1[2] | | | | 5.5[1] | 22.4[2] |
| 4.00 | 305 | | | 2.1[1] | 6.1[1] | 15.3[2] | | | 4.2[1] | 9.3[2] | 20.5[2] | | | 5.6[2] | 11.7[2] | 24.2[3] | | | 6.7[2] | 14.0[2] | 28.8[3] |
| | 406 | | | | 2.4[1] | 11.5[1] | | | 0.3[1] | 5.2[1] | 16.3[2] | | | 1.2[1] | 7.0[1] | 19.3[2] | | | 1.8[1] | 8.8[2] | 23.4[2] |
| | 610 | | | | | 4.8[1] | | | | | 9.0[1] | | | | | 10.8[1] | | | | | 14.0[1] |
| 4.40 | 305 | | | | 3.2[1] | 11.0[1] | | | 1.4[1] | 5.7[1] | 15.2[2] | | | 2.4[1] | 7.5[1] | 18.1[2] | | | 3.1[1] | 9.2[2] | 21.8[2] |
| | 406 | | | | | 7.3[1] | | | | 1.8[1] | 11.1[1] | | | | 3.0[1] | 13.3[1] | | | | 4.2[1] | 16.5[2] |
| | 610 | | | | | 1.0[1] | | | | | 4.2[1] | | | | | 5.2[1] | | | | | 7.5[1] |
| 4.80 | 305 | | | | 0.9[1] | 7.6[1] | | | | 3.0[1] | 11.1[1] | | | | 4.2[1] | 13.2[2] | | | 0.3[1] | 5.4[1] | 16.2[2] |
| | 406 | | | | | 4.1[1] | | | | | 7.2[1] | | | | | 8.7[1] | | | | 0.6[1] | 11.2[1] |
| | 610 | | | | | | | | | | 0.6[1] | | | | | 0.9[1] | | | | | 2.5[1] |
| 5.20 | 305 | | | | | 4.9[1] | | | | 0.9[1] | 7.8[1] | | | | 1.7[1] | 9.4[1] | | | | 2.5[1] | 11.8[1] |
| | 406 | | | | | 1.6[1] | | | | | 4.1[1] | | | | | 5.1[1] | | | | | 7.0[1] |
| | 610 | | | | | | | | | | | | | | | | | | | | |
| 5.60 | 305 | | | | | 2.9[1] | | | | | 5.2[1] | | | | | 6.3[1] | | | | 0.2[1] | 8.2[1] |
| | 406 | | | | | | | | | | 1.8[1] | | | | | 2.2[1] | | | | | 3.6[1] |
| | 610 | | | | | | | | | | | | | | | | | | | | |
| 6.00 | 305 | | | | | 1.3[1] | | | | | 3.2[1] | | | | | 3.9[1] | | | | | 5.4[1] |
| | 406 | | | | | | | | | | | | | | | | | | | | 1.0[1] |
| | 610 | | | | | | | | | | | | | | | | | | | | |

[1] Deflection meets L/120 [3] Deflection meets L/360

[2] Deflection meets L/240 [4] Deflection meets L/600

If no note, deflection meets L/720

Bailey Metal Products, Dass Metal Products, DCM Metal Corp., EB Metal Inc., Imperial Building Products, Manugypse, Groupe UP, Trebor Building Products Ltd.

# COMBINED AXIAL AND LATERAL LOAD TABLE

Limiting Factored Axial Compressive Resistance Per Stud (kN)

## 3.50 kPa Factored Lateral Load

| Wall Height (m) | Stud Spacing (mm) | 362S162 | | | | | 362S200 | | | | | 362S250 | | | | | 362S300 | | | | |
|---|---|---|---|---|---|---|---|---|---|---|---|---|---|---|---|---|---|---|---|---|---|
| | | 230 MPa | | 345 MPa | | | 230 MPa | | 345 MPa | | | 230 MPa | | 345 MPa | | | 230 MPa | | 345 MPa | | |
| | | 33 | 43 | 54 | 68 | 97 | 33 | 43 | 54 | 68 | 97 | 33 | 43 | 54 | 68 | 97 | 33 | 43 | 54 | 68 | 97 |
| 2.40 | 305 | 1.5[3] | 6.1[3] | 16.3[4] | 24.1 | 40.9 | 2.9[3] | 9.2[4] | 21.8 | 31.5 | 51.1 | 4.0[3] | 11.2 | 25.1 | 37.3 | 59.1 | 4.7[4] | 11.8 | 25.9 | 39.9 | 66.0 |
| | 406 | | 2.7[3] | 13.0[3] | 20.6[4] | 37.5 | | 5.4[3] | 18.0[4] | 27.7 | 47.5 | 0.3[3] | 7.1[4] | 21.1[4] | 33.0 | 55.0 | 0.9[3] | 7.7[4] | 21.9 | 35.6 | 61.7 |
| | 610 | | | 6.9[2] | 14.2[3] | 31.1[3] | | | 11.1[3] | 20.6[3] | 40.7[4] | | | 13.6[3] | 25.2[4] | 47.3 | | 0.1[3] | 14.6[3] | 27.6[4] | 53.7 |
| 2.80 | 305 | | 2.2[3] | 11.3[3] | 18.1[3] | 33.2 | | 4.6[3] | 15.7[3] | 24.3[4] | 42.0 | | 6.2[3] | 18.8[4] | 29.0 | 48.8 | 0.6[3] | 6.8[3] | 19.7[4] | 31.9 | 56.1 |
| | 406 | | | 7.5[2] | 14.1[3] | 29.1[3] | | 0.4[2] | 11.5[3] | 19.9[3] | 37.6[4] | | 1.5[3] | 14.1[3] | 24.1[3] | 43.8 | | 1.9[3] | 15.0[3] | 26.8[4] | 50.8 |
| | 610 | | | 0.8[1] | 7.0[2] | 21.8[3] | | | 3.9[2] | 12.0[2] | 29.7[3] | | | 5.6[2] | 15.2[3] | 34.8[3] | | | 6.5[2] | 17.5[3] | 41.1[3] |
| 3.20 | 305 | | | 6.9[2] | 12.6[3] | 25.6[3] | | 0.6[2] | 10.3[2] | 17.5[3] | 33.0[3] | | 1.7[2] | 12.8[3] | 21.3[3] | 38.6[4] | | 2.1[3] | 13.8[3] | 24.1[3] | 45.0 |
| | 406 | | | 2.9[1] | 8.4[2] | 21.2[3] | | | 5.8[2] | 12.9[2] | 28.3[3] | | | 7.7[2] | 16.1[3] | 33.2[3] | | | 8.6[2] | 18.5[3] | 39.1[3] |
| | 610 | | | | 1.0[1] | 13.6[2] | | | | 4.7[1] | 20.0[2] | | | | 6.9[2] | 23.5[2] | | | | 8.6[2] | 28.6[3] |
| 3.60 | 305 | | | 3.1[1] | 7.8[2] | 18.8[2] | | | 5.7[2] | 11.8[2] | 25.0[3] | | | 7.5[2] | 14.6[2] | 29.4[3] | | | 8.6[2] | 17.1[3] | 34.7[3] |
| | 406 | | | | 3.7[1] | 14.5[2] | | | 1.3[1] | 7.1[1] | 20.2[2] | | | 2.5[1] | 9.4[2] | 23.8[3] | | | 3.3[1] | 11.4[2] | 28.7[3] |
| | 610 | | | | | 6.9[1] | | | | | 11.9[1] | | | | 0.3[1] | 14.2[2] | | | | 1.4[1] | 18.1[2] |
| 4.00 | 305 | | | 0.3[1] | 4.1[1] | 13.3[2] | | | 2.2[1] | 7.2[1] | 18.3[2] | | | 3.3[1] | 9.3[2] | 21.7[2] | | | 4.2[1] | 11.3[2] | 26.0[3] |
| | 406 | | | | 0.1[1] | 9.1[1] | | | | 2.7[1] | 13.7[1] | | | | 4.2[1] | 16.3[2] | | | | 5.7[1] | 20.0[2] |
| | 610 | | | | | 1.9[1] | | | | | 5.7[1] | | | | | 7.0[1] | | | | | 9.8[1] |
| 4.40 | 305 | | | | 1.3[1] | 9.1[1] | | | | 3.7[1] | 13.1[1] | | | 0.2[1] | 5.2[1] | 15.6[2] | | | 0.7[1] | 6.6[1] | 19.1[2] |
| | 406 | | | | | 5.0[1] | | | | | 8.7[1] | | | | 0.3[1] | 10.4[1] | | | | 1.2[1] | 13.3[1] |
| | 610 | | | | | | | | | | 1.1[1] | | | | | 1.6[1] | | | | | 3.5[1] |
| 4.80 | 305 | | | | | 5.8[1] | | | | 1.1[1] | 9.1[1] | | | | 2.0[1] | 10.9[1] | | | | 3.0[1] | 13.6[1] |
| | 406 | | | | | 2.0[1] | | | | | 4.8[1] | | | | | 5.9[1] | | | | | 8.1[1] |
| | 610 | | | | | | | | | | | | | | | | | | | | |
| 5.20 | 305 | | | | | 3.2[1] | | | | | 5.9[1] | | | | | 7.1[1] | | | | 0.2[1] | 9.3[1] |
| | 406 | | | | | | | | | | 1.9[1] | | | | | 2.5[1] | | | | | 4.0[1] |
| | 610 | | | | | | | | | | | | | | | | | | | | |
| 5.60 | 305 | | | | | 1.3[1] | | | | | 3.4[1] | | | | | 4.2[1] | | | | | 5.9[1] |
| | 406 | | | | | | | | | | | | | | | | | | | | 0.9[1] |
| | 610 | | | | | | | | | | | | | | | | | | | | |
| 6.00 | 305 | | | | | | | | | | 1.5[1] | | | | | 1.9[1] | | | | | 3.2[1] |
| | 406 | | | | | | | | | | | | | | | | | | | | |
| | 610 | | | | | | | | | | | | | | | | | | | | |

[1] Deflection meets L/120 [3] Deflection meets L/360

[2] Deflection meets L/240 [4] Deflection meets L/600

If no note, deflection meets L/720

Bailey Metal Products, Dass Metal Products, DCM Metal Corp., EB Metal Inc., Imperial Building Products, Manugypse, Groupe UP, Trebor Building Products Ltd.

# COMBINED AXIAL AND LATERAL LOAD TABLE

Limiting Factored Axial Compressive Resistance Per Stud (kN)

## 0 kPa Factored Lateral Load

| Wall Height (m) | Stud Spacing (mm) | 400S162 | | | | | 400S200 | | | | | 400S250 | | | | | 400S300 | | | | |
|---|---|---|---|---|---|---|---|---|---|---|---|---|---|---|---|---|---|---|---|---|---|
| | | 230 MPa | | 345 MPa | | | 230 MPa | | 345 MPa | | | 230 MPa | | 345 MPa | | | 230 MPa | | 345 MPa | | |
| | | 33 | 43 | 54 | 68 | 97 | 33 | 43 | 54 | 68 | 97 | 33 | 43 | 54 | 68 | 97 | 33 | 43 | 54 | 68 | 97 |
| 2.40 | 305 | 14.4 | 19.8 | 31.0 | 41.1 | 59.9 | 16.9 | 24.3 | 38.6 | 50.6 | 72.5 | 18.2 | 27.1 | 41.7 | 57.3 | 83.7 | 18.9 | 27.6 | 42.6 | 59.5 | 90.5 |
| | 406 | 14.4 | 19.8 | 31.0 | 41.1 | 59.9 | 16.9 | 24.3 | 38.6 | 50.6 | 72.5 | 18.2 | 27.1 | 41.7 | 57.3 | 83.7 | 18.9 | 27.6 | 42.6 | 59.5 | 90.5 |
| | 610 | 14.4 | 19.8 | 31.0 | 41.1 | 59.9 | 16.9 | 24.3 | 38.6 | 50.6 | 72.5 | 18.2 | 27.1 | 41.7 | 57.3 | 83.7 | 18.9 | 27.6 | 42.6 | 59.5 | 90.5 |
| 2.80 | 305 | 13.9 | 19.1 | 29.4 | 38.9 | 56.1 | 16.4 | 23.4 | 36.3 | 47.5 | 67.5 | 17.6 | 26.3 | 40.4 | 54.7 | 77.8 | 18.3 | 26.8 | 40.7 | 57.1 | 85.2 |
| | 406 | 13.9 | 19.1 | 29.4 | 38.9 | 56.1 | 16.4 | 23.4 | 36.3 | 47.5 | 67.5 | 17.6 | 26.3 | 40.4 | 54.7 | 77.8 | 18.3 | 26.8 | 40.7 | 57.1 | 85.2 |
| | 610 | 13.9 | 19.1 | 29.4 | 38.9 | 56.1 | 16.3 | 23.4 | 36.3 | 47.5 | 67.5 | 17.6 | 26.3 | 40.4 | 54.7 | 77.8 | 18.3 | 26.8 | 40.7 | 57.1 | 85.2 |
| 3.20 | 305 | 13.3 | 18.3 | 27.4 | 36.2 | 51.4 | 15.7 | 22.2 | 33.6 | 43.8 | 61.6 | 16.9 | 25.3 | 38.1 | 50.8 | 71.2 | 17.7 | 25.9 | 38.5 | 54.1 | 79.6 |
| | 406 | 13.3 | 18.3 | 27.4 | 36.1 | 51.4 | 15.7 | 22.2 | 33.6 | 43.8 | 61.6 | 16.9 | 25.3 | 38.1 | 50.8 | 71.2 | 17.7 | 25.9 | 38.5 | 54.1 | 79.6 |
| | 610 | 13.3 | 18.3 | 27.4 | 36.1 | 51.4 | 15.7 | 22.2 | 33.6 | 43.8 | 61.6 | 16.9 | 25.3 | 38.1 | 50.8 | 71.2 | 17.7 | 25.9 | 38.5 | 54.0 | 79.6 |
| 3.60 | 305 | 12.6 | 17.3 | 25.1 | 32.7 | 46.2 | 14.9 | 20.9 | 30.6 | 39.7 | 55.3 | 16.2 | 24.2 | 35.7 | 46.1 | 64.1 | 16.9 | 24.8 | 36.0 | 49.7 | 72.7 |
| | 406 | 12.6 | 17.3 | 25.1 | 32.7 | 46.2 | 14.9 | 20.9 | 30.6 | 39.7 | 55.3 | 16.2 | 24.2 | 35.7 | 46.1 | 64.1 | 16.9 | 24.8 | 36.0 | 49.7 | 72.7 |
| | 610 | 12.6 | 17.3 | 25.1 | 32.7 | 46.2 | 14.9 | 20.9 | 30.6 | 39.7 | 55.3 | 16.2 | 24.2 | 35.6 | 46.1 | 64.1 | 16.9 | 24.8 | 36.0 | 49.7 | 72.7 |
| 4.00 | 305 | 11.8 | 16.2 | 22.6 | 29.0 | 40.7 | 14.1 | 19.5 | 27.5 | 35.1 | 48.8 | 15.3 | 22.7 | 32.1 | 41.0 | 56.9 | 16.0 | 23.7 | 33.6 | 45.1 | 64.7 |
| | 406 | 11.8 | 16.2 | 22.6 | 29.0 | 40.7 | 14.1 | 19.5 | 27.5 | 35.1 | 48.8 | 15.3 | 22.7 | 32.1 | 41.0 | 56.9 | 16.0 | 23.7 | 33.6 | 45.1 | 64.7 |
| | 610 | 11.8 | 16.2 | 22.6 | 29.0 | 40.7 | 14.1 | 19.5 | 27.5 | 35.1 | 48.8 | 15.3 | 22.7 | 32.1 | 41.0 | 56.9 | 16.0 | 23.7 | 33.6 | 45.1 | 64.7 |
| 4.40 | 305 | 10.9 | 15.0 | 20.2 | 25.5 | 35.4 | 13.2 | 18.0 | 24.3 | 30.7 | 42.5 | 14.4 | 21.0 | 28.5 | 35.9 | 49.7 | 15.1 | 22.4 | 31.3 | 40.8 | 56.7 |
| | 406 | 10.9 | 15.0 | 20.2 | 25.5 | 35.4 | 13.2 | 18.0 | 24.3 | 30.7 | 42.4 | 14.4 | 21.0 | 28.5 | 35.9 | 49.7 | 15.1 | 22.4 | 31.3 | 40.8 | 56.7 |
| | 610 | 10.9 | 15.0 | 20.2 | 25.5 | 35.4 | 13.2 | 18.0 | 24.3 | 30.7 | 42.4 | 14.4 | 21.0 | 28.5 | 35.9 | 49.7 | 15.1 | 22.4 | 31.3 | 40.8 | 56.7 |
| 4.80 | 305 | 10.0 | 13.7 | 18.0 | 22.4 | 30.9 | 12.1 | 16.5 | 21.6 | 26.9 | 37.1 | 13.4 | 19.2 | 25.3 | 31.6 | 43.5 | 14.2 | 21.1 | 28.5 | 36.1 | 49.9 |
| | 406 | 10.0 | 13.7 | 18.0 | 22.4 | 30.9 | 12.1 | 16.5 | 21.6 | 26.9 | 37.1 | 13.4 | 19.2 | 25.3 | 31.6 | 43.5 | 14.2 | 21.1 | 28.5 | 36.1 | 49.9 |
| | 610 | 10.0 | 13.7 | 18.0 | 22.4 | 30.9 | 12.1 | 16.5 | 21.6 | 26.9 | 37.1 | 13.4 | 19.2 | 25.3 | 31.6 | 43.5 | 14.2 | 21.1 | 28.5 | 36.1 | 49.9 |
| 5.20 | 305 | 9.0 | 12.4 | 16.0 | 19.8 | 27.1 | 11.0 | 14.9 | 19.2 | 23.7 | 32.6 | 12.4 | 17.5 | 22.5 | 27.9 | 38.3 | 13.2 | 19.7 | 25.8 | 31.9 | 44.0 |
| | 406 | 9.0 | 12.4 | 16.0 | 19.8 | 27.1 | 11.0 | 14.9 | 19.2 | 23.7 | 32.6 | 12.4 | 17.5 | 22.5 | 27.9 | 38.3 | 13.2 | 19.7 | 25.8 | 31.9 | 44.0 |
| | 610 | 9.0 | 12.4 | 16.0 | 19.7 | 27.1 | 11.0 | 14.9 | 19.2 | 23.7 | 32.6 | 12.4 | 17.5 | 22.5 | 27.9 | 38.3 | 13.2 | 19.7 | 25.8 | 31.9 | 44.0 |
| 5.60 | 305 | 8.1 | 11.1 | 14.2 | 17.5 | 23.9 | 9.9 | 13.4 | 17.0 | 21.0 | 28.8 | 11.4 | 15.7 | 20.0 | 24.7 | 33.9 | 12.2 | 18.0 | 22.9 | 28.4 | 39.1 |
| | 406 | 8.1 | 11.1 | 14.2 | 17.5 | 23.9 | 9.9 | 13.4 | 17.0 | 21.0 | 28.8 | 11.4 | 15.7 | 20.0 | 24.7 | 33.9 | 12.2 | 18.0 | 22.9 | 28.4 | 39.1 |
| | 610 | 8.1 | 11.1 | 14.2 | 17.5 | 23.9 | 9.9 | 13.4 | 17.0 | 21.0 | 28.8 | 11.4 | 15.7 | 20.0 | 24.7 | 33.9 | 12.2 | 18.0 | 22.9 | 28.4 | 39.1 |
| 6.00 | 305 | 7.4 | 10.0 | 12.6 | 15.6 | 21.2 | 8.9 | 12.0 | 15.2 | 18.7 | 25.5 | 10.5 | 14.1 | 17.8 | 22.0 | 30.2 | 11.2 | 16.2 | 20.5 | 25.3 | 34.8 |
| | 406 | 7.3 | 10.0 | 12.6 | 15.6 | 21.2 | 8.9 | 12.0 | 15.1 | 18.7 | 25.5 | 10.5 | 14.1 | 17.8 | 22.0 | 30.2 | 11.2 | 16.2 | 20.5 | 25.3 | 34.8 |
| | 610 | 7.3 | 10.0 | 12.6 | 15.5 | 21.2 | 8.9 | 12.0 | 15.1 | 18.7 | 25.5 | 10.4 | 14.1 | 17.8 | 22.0 | 30.2 | 11.2 | 16.2 | 20.5 | 25.3 | 34.8 |

[1] Deflection meets L/120 [3] Deflection meets L/360

[2] Deflection meets L/240 [4] Deflection meets L/600

If no note, deflection meets L/720

Bailey Metal Products, Dass Metal Products, DCM Metal Corp., EB Metal Inc., Imperial Building Products, Manugypse, Groupe UP, Trebor Building Products Ltd.

# COMBINED AXIAL AND LATERAL LOAD TABLE

Limiting Factored Axial Compressive Resistance Per Stud (kN)

## 0.50 kPa Factored Lateral Load

| Wall Height (m) | Stud Spacing (mm) | 400S162 | | | | | 400S200 | | | | | 400S250 | | | | | 400S300 | | | | |
|---|---|---|---|---|---|---|---|---|---|---|---|---|---|---|---|---|---|---|---|---|---|
| | | 230 MPa | | 345 MPa | | | 230 MPa | | 345 MPa | | | 230 MPa | | 345 MPa | | | 230 MPa | | 345 MPa | | |
| | | 33 | 43 | 54 | 68 | 97 | 33 | 43 | 54 | 68 | 97 | 33 | 43 | 54 | 68 | 97 | 33 | 43 | 54 | 68 | 97 |
| 2.40 | 305 | 12.5 | 17.9 | 29.2 | 39.3 | 58.2 | 14.9 | 22.3 | 36.6 | 48.6 | 70.8 | 16.2 | 24.9 | 39.7 | 55.2 | 81.7 | 16.9 | 25.5 | 40.6 | 57.4 | 88.5 |
| | 406 | 11.9 | 17.3 | 28.6 | 38.7 | 57.7 | 14.2 | 21.6 | 36.0 | 47.9 | 70.2 | 15.5 | 24.2 | 39.0 | 54.5 | 81.0 | 16.3 | 24.8 | 40.0 | 56.7 | 87.8 |
| | 610 | 10.7 | 16.1 | 27.4 | 37.5 | 56.6 | 13.0 | 20.3 | 34.7 | 46.6 | 69.0 | 14.3 | 22.9 | 37.7 | 53.1 | 79.7 | 15.0 | 23.5 | 38.7 | 55.4 | 86.5 |
| 2.80 | 305 | 11.3 | 16.5 | 26.9 | 36.3 | 53.7 | 13.6 | 20.5 | 33.5 | 44.6 | 65.0 | 14.9 | 23.3 | 37.5 | 51.6 | 75.0 | 15.6 | 23.9 | 38.0 | 54.2 | 82.3 |
| | 406 | 10.5 | 15.7 | 26.1 | 35.4 | 52.9 | 12.7 | 19.6 | 32.6 | 43.7 | 64.1 | 14.0 | 22.3 | 36.5 | 50.6 | 74.0 | 14.8 | 23.0 | 37.1 | 53.2 | 81.4 |
| | 610 | 9.0 | 14.1 | 24.5 | 33.8 | 51.4 | 11.0 | 17.9 | 30.9 | 42.0 | 62.6 | 12.3 | 20.5 | 34.7 | 48.7 | 72.2 | 13.1 | 21.2 | 35.4 | 51.3 | 79.6 |
| 3.20 | 305 | 10.0 | 14.8 | 24.1 | 32.7 | 48.3 | 12.1 | 18.5 | 30.0 | 40.1 | 58.3 | 13.3 | 21.3 | 34.2 | 46.7 | 67.4 | 14.1 | 22.0 | 34.9 | 50.0 | 75.7 |
| | 406 | 9.0 | 13.8 | 23.1 | 31.6 | 47.3 | 11.0 | 17.4 | 28.8 | 39.0 | 57.3 | 12.2 | 20.1 | 33.0 | 45.4 | 66.2 | 13.0 | 20.8 | 33.7 | 48.8 | 74.5 |
| | 610 | 7.1 | 11.8 | 21.2 | 29.6 | 45.4 | 9.0 | 15.2 | 26.7 | 36.7 | 55.3 | 10.2 | 17.8 | 30.7 | 43.0 | 63.9 | 10.9 | 18.5 | 31.5 | 46.3 | 72.1 |
| 3.60 | 305 | 8.5 | 13.0 | 21.1 | 28.5 | 42.4 | 10.4 | 16.3 | 26.2 | 35.1 | 51.3 | 11.7 | 19.1 | 30.7 | 41.0 | 59.5 | 12.5 | 19.9 | 31.4 | 44.7 | 67.8 |
| | 406 | 7.3 | 11.8 | 19.9 | 27.3 | 41.2 | 9.2 | 15.0 | 24.9 | 33.7 | 50.0 | 10.4 | 17.6 | 29.2 | 39.5 | 58.0 | 11.2 | 18.5 | 30.1 | 43.1 | 66.3 |
| | 610 | 5.2[3] | 9.5 | 17.7 | 24.9 | 39.0 | 6.9[4] | 12.5 | 22.5 | 31.2 | 47.6 | 8.0 | 14.9 | 26.5 | 36.7 | 55.3 | 8.7 | 15.7 | 27.5 | 40.3 | 63.3 |
| 4.00 | 305 | 7.0 | 11.1 | 18.0 | 24.2 | 36.2 | 8.8 | 14.0 | 22.3 | 29.9 | 44.1 | 10.0 | 16.6 | 26.4 | 35.2 | 51.4 | 10.8 | 17.7 | 28.0 | 39.2 | 59.0 |
| | 406 | 5.8[4] | 9.8 | 16.7 | 22.9 | 35.0 | 7.4 | 12.5 | 20.9 | 28.4 | 42.7 | 8.5 | 15.0 | 24.8 | 33.6 | 49.8 | 9.3 | 16.0 | 26.4 | 37.4 | 57.2 |
| | 610 | 3.5[3] | 7.3[3] | 14.4[4] | 20.4 | 32.6 | 4.9[3] | 9.9[4] | 18.4 | 25.8 | 40.1 | 5.9[3] | 12.0 | 21.9 | 30.6 | 46.8 | 6.6[4] | 12.9 | 23.5 | 34.2 | 54.0 |
| 4.40 | 305 | 5.6[4] | 9.3 | 15.1 | 20.3 | 30.7 | 7.2 | 11.8 | 18.8 | 25.1 | 37.4 | 8.3 | 14.1 | 22.2 | 29.7 | 43.8 | 9.1 | 15.4 | 24.7 | 34.0 | 50.4 |
| | 406 | 4.3[3] | 7.8[4] | 13.8 | 18.9 | 29.3 | 5.7[3] | 10.3 | 17.3 | 23.6 | 36.0 | 6.8[4] | 12.4 | 20.6 | 28.0 | 42.1 | 7.5[4] | 13.5 | 23.0 | 32.1 | 48.6 |
| | 610 | 2.0[2] | 5.3[3] | 11.5[3] | 16.5[4] | 26.9 | 3.2[3] | 7.5[3] | 14.7[4] | 20.9 | 33.3 | 4.0[3] | 9.2[3] | 17.6[4] | 24.9 | 39.0 | 4.6[3] | 10.2[4] | 19.8 | 28.7 | 45.3 |
| 4.80 | 305 | 4.3[3] | 7.6[4] | 12.6 | 17.0 | 25.9 | 5.7[3] | 9.8 | 15.8 | 21.1 | 31.8 | 6.8[4] | 11.8 | 18.7 | 25.0 | 37.3 | 7.5[4] | 13.2 | 21.3 | 28.9 | 43.1 |
| | 406 | 3.0[3] | 6.1[3] | 11.3[3] | 15.7 | 24.6 | 4.2[3] | 8.2[3] | 14.3[4] | 19.6 | 30.3 | 5.2[3] | 10.0[4] | 17.0 | 23.3 | 35.6 | 5.8[3] | 11.2[4] | 19.4 | 27.0 | 41.3 |
| | 610 | 0.8[2] | 3.6[2] | 9.0[3] | 13.2[3] | 22.2[4] | 1.7[2] | 5.4[3] | 11.7[3] | 16.9[3] | 27.7 | 2.4[2] | 6.8[3] | 14.1[3] | 20.3[4] | 32.5 | 2.9[2] | 7.8[3] | 16.2[3] | 23.6 | 37.9 |
| 5.20 | 305 | 3.2[3] | 6.0[3] | 10.5[4] | 14.3 | 22.0 | 4.4[3] | 8.0[3] | 13.2 | 17.8 | 27.1 | 5.3[3] | 9.6[4] | 15.7 | 21.1 | 31.9 | 6.0[3] | 11.1 | 18.1 | 24.5 | 37.0 |
| | 406 | 2.0[2] | 4.6[3] | 9.2[3] | 12.9[3] | 20.7 | 2.9[2] | 6.4[3] | 11.7[3] | 16.3[4] | 25.7 | 3.7[3] | 7.9[3] | 14.1[4] | 19.5 | 30.2 | 4.3[3] | 9.1[3] | 16.3[4] | 22.6 | 35.1 |
| | 610 | | 2.2[2] | 6.9[2] | 10.6[3] | 18.3[3] | 0.4[1] | 3.7[2] | 9.2[3] | 13.7[3] | 23.1[4] | 1.0[2] | 4.8[2] | 11.2[3] | 16.5[3] | 27.1[4] | 1.4[2] | 5.6[3] | 13.1[3] | 19.3[3] | 31.8 |
| 5.60 | 305 | 2.3[2] | 4.7[3] | 8.7[3] | 12.0[4] | 18.8 | 3.2[3] | 6.4[3] | 11.0[3] | 15.0[4] | 23.2 | 4.1[3] | 7.8[3] | 13.1[4] | 17.9 | 27.3 | 4.7[3] | 9.1[3] | 15.2[4] | 20.8 | 31.8 |
| | 406 | 1.1[1] | 3.4[2] | 7.4[3] | 10.7[3] | 17.5[4] | 1.8[2] | 4.8[2] | 9.6[3] | 13.5[3] | 21.8 | 2.5[2] | 6.1[3] | 11.5[3] | 16.3[4] | 25.6 | 3.0[2] | 7.1[3] | 13.4[3] | 18.9[4] | 30.0 |
| | 610 | | 1.0[1] | 5.2[2] | 8.4[2] | 15.2[3] | | 2.2[1] | 7.2[2] | 11.0[2] | 19.3[3] | | 3.1[2] | 8.8[2] | 13.4[3] | 22.7[3] | 0.1[1] | 3.7[2] | 10.3[2] | 15.7[3] | 26.7[4] |
| 6.00 | 305 | 1.6[2] | 3.7[2] | 7.2[3] | 10.1[3] | 16.0[4] | 2.3[2] | 5.0[3] | 9.1[3] | 12.7[3] | 19.9 | 3.0[2] | 6.2[3] | 11.0[3] | 15.2[4] | 23.5 | 3.5[2] | 7.3[3] | 12.7[3] | 17.7 | 27.5 |
| | 406 | 0.4[1] | 2.3[2] | 6.0[2] | 8.8[3] | 14.8[3] | 1.0[1] | 3.6[2] | 7.8[2] | 11.3[3] | 18.5[3] | 1.5[2] | 4.6[2] | 9.4[3] | 13.6[3] | 21.9[4] | 1.9[2] | 5.4[3] | 11.0[3] | 15.9[3] | 25.7 |
| | 610 | | 0.1[1] | 3.9[1] | 6.6[2] | 12.6[2] | | 1.1[1] | 5.5[1] | 8.9[2] | 16.1[3] | | 1.7[1] | 6.8[2] | 10.8[2] | 19.0[3] | | 2.1[2] | 8.0[2] | 12.8[3] | 22.5[3] |

[1] Deflection meets L/120 [3] Deflection meets L/360

[2] Deflection meets L/240 [4] Deflection meets L/600

If no note, deflection meets L/720

Bailey Metal Products, Dass Metal Products, DCM Metal Corp., EB Metal Inc., Imperial Building Products, Manugypse, Groupe UP, Trebor Building Products Ltd.

# COMBINED AXIAL AND LATERAL LOAD TABLE

Limiting Factored Axial Compressive Resistance Per Stud (kN)

## 1.00 kPa Factored Lateral Load

| Wall Height (m) | Stud Spacing (mm) | 400S162 | | | | | 400S200 | | | | | 400S250 | | | | | 400S300 | | | | |
|---|---|---|---|---|---|---|---|---|---|---|---|---|---|---|---|---|---|---|---|---|---|
| | | 230 MPa | | 345 MPa | | | 230 MPa | | 345 MPa | | | 230 MPa | | 345 MPa | | | 230 MPa | | 345 MPa | | |
| | | 33 | 43 | 54 | 68 | 97 | 33 | 43 | 54 | 68 | 97 | 33 | 43 | 54 | 68 | 97 | 33 | 43 | 54 | 68 | 97 |
| 2.40 | 305 | 10.7 | 16.1 | 27.4 | 37.5 | 56.6 | 13.0 | 20.3 | 34.7 | 46.6 | 69.0 | 14.3 | 22.9 | 37.7 | 53.1 | 79.7 | 15.0 | 23.5 | 38.7 | 55.4 | 86.5 |
| | 406 | 9.6 | 14.9 | 26.3 | 36.3 | 55.5 | 11.7 | 19.0 | 33.4 | 45.3 | 67.9 | 13.0 | 21.5 | 36.5 | 51.7 | 78.3 | 13.8 | 22.2 | 37.5 | 54.1 | 85.2 |
| | 610 | 7.4 | 12.7 | 24.1 | 34.0 | 53.4 | 9.4 | 16.6 | 31.0 | 42.9 | 65.6 | 10.6 | 18.9 | 34.0 | 49.1 | 75.7 | 11.4 | 19.6 | 35.1 | 51.4 | 82.6 |
| 2.80 | 305 | 9.0 | 14.1 | 24.5 | 33.8 | 51.4 | 11.0 | 17.9 | 30.9 | 42.0 | 62.6 | 12.3 | 20.5 | 34.7 | 48.7 | 72.2 | 13.1 | 21.2 | 35.4 | 51.3 | 79.6 |
| | 406 | 7.5 | 12.6 | 23.0 | 32.2 | 49.9 | 9.5 | 16.2 | 29.3 | 40.3 | 61.0 | 10.7 | 18.7 | 33.0 | 46.8 | 70.4 | 11.5 | 19.4 | 33.7 | 49.5 | 77.7 |
| | 610 | 4.8[4] | 9.7 | 20.2 | 29.3 | 47.1 | 6.5 | 13.1 | 26.1 | 37.0 | 58.0 | 7.7 | 15.4 | 29.7 | 43.3 | 67.0 | 8.4 | 16.1 | 30.5 | 46.0 | 74.2 |
| 3.20 | 305 | 7.1 | 11.8 | 21.2 | 29.6 | 45.4 | 9.0 | 15.2 | 26.7 | 36.7 | 55.3 | 10.2 | 17.8 | 30.7 | 43.0 | 63.9 | 10.9 | 18.5 | 31.5 | 46.3 | 72.1 |
| | 406 | 5.4[4] | 10.0 | 19.4 | 27.7 | 43.6 | 7.1 | 13.2 | 24.7 | 34.7 | 53.3 | 8.2 | 15.6 | 28.6 | 40.7 | 61.7 | 9.0 | 16.4 | 29.5 | 44.0 | 69.7 |
| | 610 | 2.3[3] | 6.7[3] | 16.1[4] | 24.2 | 40.1 | 3.7[3] | 9.6[4] | 21.1 | 30.8 | 49.7 | 4.7[3] | 11.6 | 24.6 | 36.4 | 57.5 | 5.4[3] | 12.3 | 25.6 | 39.6 | 65.3 |
| 3.60 | 305 | 5.2[3] | 9.5 | 17.7 | 24.9 | 39.0 | 6.9[4] | 12.5 | 22.5 | 31.2 | 47.6 | 8.0 | 14.9 | 26.5 | 36.7 | 55.3 | 8.7 | 15.7 | 27.5 | 40.3 | 63.3 |
| | 406 | 3.4[3] | 7.5[3] | 15.7[4] | 22.8 | 36.9 | 4.8[3] | 10.3[4] | 20.2 | 28.9 | 45.4 | 5.8[3] | 12.4 | 24.0 | 34.1 | 52.7 | 6.5[4] | 13.2 | 25.0 | 37.6 | 60.6 |
| | 610 | | 3.9[3] | 12.2[3] | 19.0[3] | 33.1 | 1.1[2] | 6.3[3] | 16.3[3] | 24.7[4] | 41.3 | 1.9[3] | 8.0[3] | 19.6[4] | 29.4 | 48.0 | 2.5[3] | 8.7[3] | 20.6[4] | 32.7 | 55.5 |
| 4.00 | 305 | 3.5[3] | 7.3[3] | 14.4[4] | 20.4 | 32.6 | 4.9[3] | 9.9[4] | 18.4 | 25.8 | 40.1 | 5.9[3] | 12.0 | 21.9 | 30.6 | 46.8 | 6.6[4] | 12.9 | 23.5 | 34.2 | 54.0 |
| | 406 | 1.6[2] | 5.2[3] | 12.3[3] | 18.2[4] | 30.4 | 2.7[3] | 7.5[3] | 16.1[4] | 23.3 | 37.8 | 3.6[3] | 9.3[3] | 19.3[4] | 27.8 | 44.1 | 4.2[3] | 10.2[4] | 20.8 | 31.3 | 51.0 |
| | 610 | | 1.4[2] | 8.7[2] | 14.4[3] | 26.5[3] | | 3.4[2] | 12.0[3] | 19.0[3] | 33.5[4] | | 4.7[3] | 14.7[3] | 23.0[3] | 39.1 | | 5.3[3] | 16.1[3] | 26.1[4] | 45.7 |
| 4.40 | 305 | 2.0[2] | 5.3[3] | 11.5[3] | 16.5[4] | 26.9 | 3.2[3] | 7.5[3] | 14.7[4] | 20.9 | 33.3 | 4.0[3] | 9.2[3] | 17.6[4] | 24.9 | 39.0 | 4.6[3] | 10.2[4] | 19.8 | 28.7 | 45.3 |
| | 406 | | 3.1[2] | 9.4[3] | 14.3[3] | 24.7[4] | 0.9[2] | 5.1[3] | 12.4[3] | 18.5[3] | 31.0 | 1.6[2] | 6.5[3] | 15.0[3] | 22.2[4] | 36.2 | 2.1[2] | 7.3[3] | 17.0[3] | 25.7[4] | 42.2 |
| | 610 | | | 5.8[2] | 10.5[2] | 20.8[3] | | 0.9[2] | 8.4[2] | 14.3[3] | 26.7[3] | | 1.8[2] | 10.5[2] | 17.4[3] | 31.3[3] | | 2.3[2] | 12.1[3] | 20.4[3] | 36.8[4] |
| 4.80 | 305 | 0.8[2] | 3.6[2] | 9.0[3] | 13.2[3] | 22.2[4] | 1.7[2] | 5.4[3] | 11.7[3] | 16.9[3] | 27.7 | 2.4[2] | 6.8[3] | 14.1[3] | 20.3[4] | 32.5 | 2.9[2] | 7.8[3] | 16.2[3] | 23.6 | 37.9 |
| | 406 | | 1.4[2] | 7.0[2] | 11.1[3] | 20.0[3] | | 3.0[2] | 9.5[2] | 14.6[3] | 25.4[3] | | 4.1[2] | 11.6[3] | 17.6[3] | 29.7[4] | 0.4[2] | 4.8[2] | 13.4[3] | 20.6[3] | 34.9 |
| | 610 | | | 3.5[1] | 7.4[2] | 16.3[2] | | | 5.6[1] | 10.5[2] | 21.2[3] | | | 7.2[2] | 13.0[2] | 24.9[3] | | | 8.5[2] | 15.5[3] | 29.5[3] |
| 5.20 | 305 | | 2.2[2] | 6.9[2] | 10.6[3] | 18.3[3] | 0.4[1] | 3.7[2] | 9.2[3] | 13.7[3] | 23.1[4] | 1.0[2] | 4.8[2] | 11.2[3] | 16.5[3] | 27.1[4] | 1.4[2] | 5.6[3] | 13.1[3] | 19.3[3] | 31.8 |
| | 406 | | 0.1[1] | 5.0[1] | 8.5[2] | 16.2[3] | | 1.4[1] | 7.1[2] | 11.4[2] | 20.8[3] | | 2.2[2] | 8.7[2] | 13.9[3] | 24.4[3] | | 2.7[2] | 10.3[2] | 16.4[3] | 28.8[4] |
| | 610 | | | 1.7[1] | 5.0[1] | 12.6[2] | | | 3.3[1] | 7.5[1] | 16.8[2] | | | 4.5[1] | 9.5[2] | 19.7[2] | | | 5.5[1] | 11.4[2] | 23.6[3] |
| 5.60 | 305 | | 1.0[1] | 5.2[2] | 8.4[2] | 15.2[3] | | 2.2[1] | 7.2[2] | 11.0[2] | 19.3[3] | | 3.1[2] | 8.8[2] | 13.4[3] | 22.7[3] | 0.1[1] | 3.7[2] | 10.3[2] | 15.7[3] | 26.7[4] |
| | 406 | | | 3.4[1] | 6.4[1] | 13.2[2] | | | 5.1[1] | 8.9[2] | 17.1[3] | | 0.6[1] | 6.4[2] | 10.9[2] | 20.1[3] | | 0.9[1] | 7.6[2] | 12.9[2] | 23.8[3] |
| | 610 | | | 0.2[1] | 3.1[1] | 9.7[1] | | | 1.6[1] | 5.2[1] | 13.3[2] | | | 2.4[1] | 6.7[1] | 15.5[2] | | | 3.1[1] | 8.2[1] | 18.8[2] |
| 6.00 | 305 | | 0.1[1] | 3.9[1] | 6.6[2] | 12.6[2] | | 1.1[1] | 5.5[1] | 8.9[2] | 16.1[3] | | 1.7[1] | 6.8[2] | 10.8[2] | 19.0[3] | | 2.1[2] | 8.0[2] | 12.8[3] | 22.5[3] |
| | 406 | | | 2.1[1] | 4.7[1] | 10.6[2] | | | 3.5[1] | 6.8[1] | 14.0[2] | | | 4.5[1] | 8.5[2] | 16.5[2] | | | 5.5[1] | 10.1[2] | 19.7[3] |
| | 610 | | | | 1.5[1] | 7.4[1] | | | 0.1[1] | 3.3[1] | 10.4[1] | | | 0.7[1] | 4.4[1] | 12.2[1] | | | 1.1[1] | 5.6[1] | 14.9[2] |

[1] Deflection meets L/120 [3] Deflection meets L/360

[2] Deflection meets L/240 [4] Deflection meets L/600

If no note, deflection meets L/720

Bailey Metal Products, Dass Metal Products, DCM Metal Corp., EB Metal Inc., Imperial Building Products, Manugypse, Groupe UP, Trebor Building Products Ltd.

# COMBINED AXIAL AND LATERAL LOAD TABLE

Limiting Factored Axial Compressive Resistance Per Stud (kN)

## 1.50 kPa Factored Lateral Load

| Wall Height (m) | Stud Spacing (mm) | 400S162 | | | | | 400S200 | | | | | 400S250 | | | | | 400S300 | | | | |
|---|---|---|---|---|---|---|---|---|---|---|---|---|---|---|---|---|---|---|---|---|---|
| | | 230 MPa | | 345 MPa | | | 230 MPa | | 345 MPa | | | 230 MPa | | 345 MPa | | | 230 MPa | | 345 MPa | | |
| | | 33 | 43 | 54 | 68 | 97 | 33 | 43 | 54 | 68 | 97 | 33 | 43 | 54 | 68 | 97 | 33 | 43 | 54 | 68 | 97 |
| 2.40 | 305 | 9.0 | 14.4 | 25.8 | 35.7 | 55.0 | 11.1 | 18.4 | 32.8 | 44.7 | 67.3 | 12.4 | 20.9 | 35.8 | 51.0 | 77.7 | 13.2 | 21.5 | 36.9 | 53.4 | 84.5 |
| | 406 | 7.4 | 12.7 | 24.1 | 34.0 | 53.4 | 9.4 | 16.6 | 31.0 | 42.9 | 65.6 | 10.6 | 18.9 | 34.0 | 49.1 | 75.7 | 11.4 | 19.6 | 35.1 | 51.4 | 82.6 |
| | 610 | 4.3[4] | 9.5 | 21.0 | 30.7 | 50.3 | 6.0 | 13.1 | 27.5 | 39.3 | 62.3 | 7.2 | 15.2 | 30.4 | 45.2 | 71.9 | 8.0 | 15.9 | 31.5 | 47.6 | 78.8 |
| 2.80 | 305 | 6.8 | 11.8 | 22.3 | 31.5 | 49.2 | 8.7 | 15.4 | 28.4 | 39.4 | 60.2 | 9.9 | 17.9 | 32.1 | 45.9 | 69.5 | 10.7 | 18.6 | 32.9 | 48.6 | 76.9 |
| | 406 | 4.8[4] | 9.7 | 20.2 | 29.3 | 47.1 | 6.5 | 13.1 | 26.1 | 37.0 | 58.0 | 7.7 | 15.4 | 29.7 | 43.3 | 67.0 | 8.4 | 16.1 | 30.5 | 46.0 | 74.2 |
| | 610 | 1.1[3] | 5.8[3] | 16.3[4] | 25.1 | 43.1 | 2.5[3] | 8.8[4] | 21.8 | 32.5 | 53.7 | 3.5[3] | 10.7 | 25.0 | 38.3 | 62.0 | 4.2[3] | 11.4 | 26.0 | 41.0 | 69.2 |
| 3.20 | 305 | 4.6[3] | 9.1 | 18.5 | 26.8 | 42.7 | 6.2[4] | 12.3 | 23.8 | 33.7 | 52.4 | 7.3 | 14.6 | 27.5 | 39.6 | 60.6 | 8.1 | 15.3 | 28.5 | 42.9 | 68.6 |
| | 406 | 2.3[3] | 6.7[3] | 16.1[4] | 24.2 | 40.1 | 3.7[3] | 9.6[4] | 21.1 | 30.8 | 49.7 | 4.7[3] | 11.6 | 24.6 | 36.4 | 57.5 | 5.4[3] | 12.3 | 25.6 | 39.6 | 65.3 |
| | 610 | | 2.2[3] | 11.7[3] | 19.4[3] | 35.4 | | 4.7[3] | 16.1[3] | 25.6[4] | 44.7 | | 6.3[3] | 19.2[3] | 30.6 | 51.6 | 0.5[3] | 6.9[3] | 20.2[4] | 33.7 | 59.2 |
| 3.60 | 305 | 2.5[3] | 6.5[3] | 14.8[4] | 21.8 | 35.9 | 3.8[3] | 9.2[3] | 19.2 | 27.8 | 44.4 | 4.8[3] | 11.3[4] | 22.9 | 32.9 | 51.5 | 5.5[3] | 12.0 | 23.9 | 36.3 | 59.3 |
| | 406 | | 3.9[3] | 12.2[3] | 19.0[3] | 33.1 | 1.1[2] | 6.3[3] | 16.3[3] | 24.7[4] | 41.3 | 1.9[3] | 8.0[3] | 19.6[4] | 29.4 | 48.0 | 2.5[3] | 8.7[3] | 20.6[4] | 32.7 | 55.5 |
| | 610 | | | 7.6[2] | 14.0[3] | 28.0[3] | | 1.1[2] | 11.1[3] | 19.1[3] | 35.9[4] | | 2.2[2] | 13.7[3] | 23.2[3] | 41.6 | | 2.7[3] | 14.8[3] | 26.1[3] | 48.7 |
| 4.00 | 305 | 0.7[2] | 4.2[3] | 11.4[3] | 17.2[3] | 29.4 | 1.7[2] | 6.4[3] | 15.0[3] | 22.2[4] | 36.7 | 2.5[3] | 8.1[3] | 18.1[4] | 26.5 | 42.8 | 3.1[3] | 8.9[3] | 19.6[4] | 30.0 | 49.6 |
| | 406 | | 1.4[2] | 8.7[2] | 14.4[3] | 26.5[3] | | 3.4[2] | 12.0[3] | 19.0[3] | 33.5[4] | | 4.7[3] | 14.7[3] | 23.0[3] | 39.1 | | 5.3[3] | 16.1[3] | 26.1[4] | 45.7 |
| | 610 | | | 4.1[1] | 9.4[2] | 21.4[3] | | | 6.8[2] | 13.5[2] | 28.0[3] | | | 8.8[2] | 16.7[3] | 32.6[3] | | | 9.9[2] | 19.4[3] | 38.6[3] |
| 4.40 | 305 | | 2.1[2] | 8.4[2] | 13.3[3] | 23.7[3] | | 4.0[2] | 11.4[3] | 17.4[3] | 29.8[4] | 0.5[2] | 5.3[3] | 13.8[3] | 20.9[3] | 34.9 | 1.0[2] | 6.0[3] | 15.7[3] | 24.3[4] | 40.8 |
| | 406 | | | 5.8[2] | 10.5[2] | 20.8[3] | | 0.9[2] | 8.4[2] | 14.3[3] | 26.7[3] | | 1.8[2] | 10.5[2] | 17.4[3] | 31.3[3] | | 2.3[2] | 12.1[3] | 20.4[3] | 36.8[4] |
| | 610 | | | 1.3[1] | 5.7[1] | 15.9[2] | | | 3.4[1] | 9.0[2] | 21.3[2] | | | 4.8[1] | 11.4[2] | 24.9[3] | | | 5.8[2] | 13.7[2] | 29.8[3] |
| 4.80 | 305 | | 0.5[1] | 6.0[2] | 10.1[2] | 19.0[3] | | 1.9[2] | 8.4[2] | 13.5[3] | 24.3[3] | | 2.9[2] | 10.4[2] | 16.4[3] | 28.4[4] | | 3.5[2] | 12.1[3] | 19.3[3] | 33.5[4] |
| | 406 | | | 3.5[1] | 7.4[2] | 16.3[2] | | | 5.6[1] | 10.5[2] | 21.3[3] | | | 7.2[2] | 13.0[2] | 24.9[3] | | | 8.5[2] | 15.5[3] | 29.5[3] |
| | 610 | | | | 2.8[1] | 11.5[1] | | | 0.8[1] | 5.4[1] | 16.0[2] | | | 1.6[1] | 7.2[1] | 18.7[2] | | | 2.3[1] | 8.9[2] | 22.7[2] |
| 5.20 | 305 | | | 4.1[1] | 7.6[2] | 15.3[2] | | 0.3[1] | 6.1[2] | 10.4[2] | 19.7[3] | | 1.0[1] | 7.6[2] | 12.7[2] | 23.2[3] | | 1.3[2] | 9.0[2] | 15.1[3] | 27.4[3] |
| | 406 | | | 1.7[1] | 5.0[1] | 12.6[2] | | | 3.3[1] | 7.5[1] | 16.8[2] | | | 4.5[1] | 9.5[2] | 19.7[2] | | | 5.5[1] | 11.4[2] | 23.6[3] |
| | 610 | | | | 0.6[1] | 8.1[1] | | | | 2.7[1] | 11.8[1] | | | | 3.9[1] | 13.8[1] | | | | 5.2[1] | 17.1[2] |
| 5.60 | 305 | | | 2.5[1] | 5.5[1] | 12.2[2] | | | 4.1[1] | 7.9[1] | 16.0[2] | | | 5.3[1] | 9.8[2] | 18.9[3] | | | 6.4[1] | 11.7[2] | 22.5[3] |
| | 406 | | | 0.2[1] | 3.1[1] | 9.7[1] | | | 1.6[1] | 5.2[1] | 13.3[2] | | | 2.4[1] | 6.7[1] | 15.5[2] | | | 3.1[1] | 8.2[1] | 18.8[2] |
| | 610 | | | | | 5.4[1] | | | | 0.5[1] | 8.5[1] | | | | 1.4[1] | 9.9[1] | | | | 2.2[1] | 12.5[1] |
| 6.00 | 305 | | | 1.3[1] | 3.9[1] | 9.8[1] | | | 2.6[1] | 5.9[1] | 13.0[2] | | | 3.5[1] | 7.4[1] | 15.3[2] | | | 4.3[1] | 8.9[2] | 18.4[2] |
| | 406 | | | | 1.5[1] | 7.4[1] | | | 0.1[1] | 3.3[1] | 10.4[1] | | | 0.7[1] | 4.4[1] | 12.2[1] | | | 1.1[1] | 5.6[1] | 14.9[2] |
| | 610 | | | | | 3.2[1] | | | | | 5.8[1] | | | | | 6.8[1] | | | | | 8.9[1] |

[1] Deflection meets L/120 [3] Deflection meets L/360

[2] Deflection meets L/240 [4] Deflection meets L/600

If no note, deflection meets L/720

Bailey Metal Products, Dass Metal Products, DCM Metal Corp., EB Metal Inc., Imperial Building Products, Manugypse, Groupe UP, Trebor Building Products Ltd.

# COMBINED AXIAL AND LATERAL LOAD TABLE

Limiting Factored Axial Compressive Resistance Per Stud (kN)

## 2.00 kPa Factored Lateral Load

| Wall Height (m) | Stud Spacing (mm) | 400S162 | | | | | 400S200 | | | | | 400S250 | | | | | 400S300 | | | | |
|---|---|---|---|---|---|---|---|---|---|---|---|---|---|---|---|---|---|---|---|---|---|
| | | 230 MPa | | 345 MPa | | | 230 MPa | | 345 MPa | | | 230 MPa | | 345 MPa | | | 230 MPa | | 345 MPa | | |
| | | 33 | 43 | 54 | 68 | 97 | 33 | 43 | 54 | 68 | 97 | 33 | 43 | 54 | 68 | 97 | 33 | 43 | 54 | 68 | 97 |
| 2.40 | 305 | 7.4 | 12.7 | 24.1 | 34.0 | 53.4 | 9.4 | 16.6 | 31.0 | 42.9 | 65.6 | 10.6 | 18.9 | 34.0 | 49.1 | 75.7 | 11.4 | 19.6 | 35.1 | 51.4 | 82.6 |
| | 406 | 5.3 | 10.5 | 22.0 | 31.8 | 51.3 | 7.1 | 14.2 | 28.6 | 40.5 | 63.4 | 8.3 | 16.5 | 31.6 | 46.5 | 73.2 | 9.1 | 17.1 | 32.7 | 48.9 | 80.0 |
| | 610 | 1.4[3] | 6.4[4] | 18.0 | 27.6 | 47.3 | 2.9[3] | 9.8 | 24.1 | 35.8 | 59.2 | 4.0[4] | 11.7 | 26.9 | 41.5 | 68.3 | 4.7[4] | 12.4 | 28.1 | 44.0 | 75.1 |
| 2.80 | 305 | 4.8[4] | 9.7 | 20.2 | 29.3 | 47.1 | 6.5 | 13.1 | 26.1 | 37.0 | 58.0 | 7.7 | 15.4 | 29.7 | 43.3 | 67.0 | 8.4 | 16.1 | 30.5 | 46.0 | 74.2 |
| | 406 | 2.3[3] | 7.0[4] | 17.6 | 26.5 | 44.4 | 3.8[3] | 10.2[4] | 23.2 | 34.0 | 55.1 | 4.9[4] | 12.2 | 26.5 | 39.9 | 63.6 | 5.5[4] | 12.9 | 27.4 | 42.6 | 70.9 |
| | 610 | | 2.2[3] | 12.8[3] | 21.3[4] | 39.3 | | 4.9[3] | 17.8[3] | 28.3[4] | 49.7 | | 6.4[3] | 20.7[4] | 33.6 | 57.4 | 0.2[3] | 7.1[3] | 21.7[4] | 36.3 | 64.4 |
| 3.20 | 305 | 2.3[3] | 6.7[3] | 16.1[4] | 24.2 | 40.1 | 3.7[3] | 9.6[4] | 21.1 | 30.8 | 49.7 | 4.7[3] | 11.6 | 24.6 | 36.4 | 57.5 | 5.4[3] | 12.3 | 25.6 | 39.6 | 65.3 |
| | 406 | | 3.7[3] | 13.1[3] | 20.9[4] | 37.0 | 0.6[3] | 6.3[3] | 17.7[3] | 27.3 | 46.3 | 1.5[3] | 8.0[3] | 20.9[4] | 32.5 | 53.5 | 2.1[3] | 8.6[4] | 21.9[4] | 35.6 | 61.2 |
| | 610 | | | 7.8[2] | 15.1[3] | 31.2[3] | | 0.4[2] | 11.7[3] | 20.9[3] | 40.0[4] | | 1.5[3] | 14.3[3] | 25.3[3] | 46.3 | | 1.9[3] | 15.4[3] | 28.2[4] | 53.5 |
| 3.60 | 305 | | 3.9[3] | 12.2[3] | 19.0[3] | 33.1 | 1.1[2] | 6.3[3] | 16.3[3] | 24.7[4] | 41.3 | 1.9[3] | 8.0[3] | 19.6[4] | 29.4 | 48.0 | 2.5[3] | 8.7[3] | 20.6[4] | 32.7 | 55.5 |
| | 406 | | 0.6[2] | 9.0[2] | 15.6[3] | 29.6[3] | | 2.7[2] | 12.7[3] | 20.9[3] | 37.6[4] | | 4.0[3] | 15.6[3] | 25.2[3] | 43.7 | | 4.6[3] | 16.6[3] | 28.2[4] | 50.9 |
| | 610 | | | 3.5[1] | 9.6[2] | 23.5[3] | | | 6.6[2] | 14.3[2] | 31.0[3] | | | 8.6[2] | 17.7[3] | 35.9[3] | | | 9.5[2] | 20.3[3] | 42.5[4] |
| 4.00 | 305 | | 1.4[2] | 8.7[2] | 14.4[3] | 26.5[3] | | 3.4[2] | 12.0[3] | 19.0[3] | 33.5[4] | | 4.7[3] | 14.7[3] | 23.0[3] | 39.1 | | 5.3[3] | 16.1[3] | 26.1[4] | 45.7 |
| | 406 | | | 5.5[2] | 10.9[2] | 23.0[3] | | | 8.5[2] | 15.3[3] | 29.8[3] | | 0.6[2] | 10.7[2] | 18.7[3] | 34.7[3] | | 1.0[2] | 11.9[3] | 21.5[3] | 40.8[4] |
| | 610 | | | 0.1[1] | 5.0[1] | 16.9[2] | | | 2.3[1] | 8.7[2] | 23.1[2] | | | 3.7[1] | 11.3[2] | 26.9[3] | | | 4.5[2] | 13.5[2] | 32.3[3] |
| 4.40 | 305 | | | 5.8[2] | 10.5[2] | 20.8[3] | | 0.9[2] | 8.4[2] | 14.3[3] | 26.7[3] | | 1.8[2] | 10.5[2] | 17.4[3] | 31.3[3] | | 2.3[2] | 12.1[3] | 20.4[3] | 36.8[4] |
| | 406 | | | 2.7[1] | 7.2[1] | 17.4[2] | | | 5.0[1] | 10.7[2] | 23.0[3] | | | 6.6[2] | 13.3[2] | 26.9[3] | | | 7.8[2] | 15.8[2] | 32.0[3] |
| | 610 | | | | 1.5[1] | 11.6[1] | | | | 4.4[1] | 16.6[2] | | | | 6.1[1] | 19.3[2] | | | 0.4[1] | 7.9[1] | 23.7[2] |
| 4.80 | 305 | | | 3.5[1] | 7.4[2] | 16.3[2] | | | 5.6[1] | 10.5[2] | 21.3[3] | | | 7.2[2] | 13.0[2] | 24.9[3] | | | 8.5[2] | 15.5[3] | 29.5[3] |
| | 406 | | | 0.5[1] | 4.3[1] | 13.0[2] | | | 2.3[1] | 7.0[1] | 17.7[2] | | | 3.4[1] | 9.0[2] | 20.6[2] | | | 4.3[1] | 11.0[2] | 24.9[3] |
| | 610 | | | | | 7.4[1] | | | | 1.0[1] | 11.5[1] | | | | 2.2[1] | 13.4[1] | | | | 3.3[1] | 16.8[2] |
| 5.20 | 305 | | | 1.7[1] | 5.0[1] | 12.6[2] | | | 3.3[1] | 7.5[1] | 16.8[2] | | | 4.5[1] | 9.5[2] | 19.7[2] | | | 5.5[1] | 11.4[2] | 23.6[3] |
| | 406 | | | | 2.0[1] | 9.5[1] | | | 0.2[1] | 4.2[1] | 13.4[1] | | | 0.9[1] | 5.7[1] | 15.7[2] | | | 1.4[1] | 7.1[1] | 19.1[2] |
| | 610 | | | | | 4.2[1] | | | | | 7.5[1] | | | | | 8.7[1] | | | | | 11.4[1] |
| 5.60 | 305 | | | 0.2[1] | 3.1[1] | 9.7[1] | | | 1.6[1] | 5.2[1] | 13.3[2] | | | 2.4[1] | 6.7[1] | 15.5[2] | | | 3.1[1] | 8.2[1] | 18.8[2] |
| | 406 | | | | 0.2[1] | 6.7[1] | | | | 2.0[1] | 10.0[1] | | | | 3.0[1] | 11.7[1] | | | | 4.1[1] | 14.5[2] |
| | 610 | | | | | 1.7[1] | | | | | 4.4[1] | | | | | 5.0[1] | | | | | 7.2[1] |
| 6.00 | 305 | | | | 1.5[1] | 7.4[1] | | | 0.1[1] | 3.3[1] | 10.4[1] | | | 0.7[1] | 4.4[1] | 12.2[1] | | | 1.1[1] | 5.6[1] | 14.9[2] |
| | 406 | | | | | 4.5[1] | | | | 0.2[1] | 7.2[1] | | | | 1.0[1] | 8.4[1] | | | | 1.7[1] | 10.8[1] |
| | 610 | | | | | | | | | | 1.9[1] | | | | | 2.1[1] | | | | | 3.8[1] |

[1] Deflection meets L/120 [3] Deflection meets L/360

[2] Deflection meets L/240 [4] Deflection meets L/600

If no note, deflection meets L/720

Bailey Metal Products, Dass Metal Products, DCM Metal Corp., EB Metal Inc., Imperial Building Products, Manugypse, Groupe UP, Trebor Building Products Ltd.

# COMBINED AXIAL AND LATERAL LOAD TABLE

Limiting Factored Axial Compressive Resistance Per Stud (kN)

## 2.50 kPa Factored Lateral Load

| Wall Height (m) | Stud Spacing (mm) | 400S162 | | | | | 400S200 | | | | | 400S250 | | | | | 400S300 | | | | |
|---|---|---|---|---|---|---|---|---|---|---|---|---|---|---|---|---|---|---|---|---|---|
| | | 230 MPa | | 345 MPa | | | 230 MPa | | 345 MPa | | | 230 MPa | | 345 MPa | | | 230 MPa | | 345 MPa | | |
| | | 33 | 43 | 54 | 68 | 97 | 33 | 43 | 54 | 68 | 97 | 33 | 43 | 54 | 68 | 97 | 33 | 43 | 54 | 68 | 97 |
| 2.40 | 305 | 5.8 | 11.0 | 22.5 | 32.4 | 51.8 | 7.7 | 14.8 | 29.2 | 41.0 | 64.0 | 8.9 | 17.1 | 32.1 | 47.1 | 73.8 | 9.7 | 17.7 | 33.3 | 49.5 | 80.7 |
| | 406 | 3.3[4] | 8.4 | 20.0 | 29.7 | 49.3 | 5.0[4] | 12.0 | 26.3 | 38.1 | 61.3 | 6.1 | 14.1 | 29.2 | 43.9 | 70.7 | 6.9 | 14.7 | 30.4 | 46.4 | 77.5 |
| | 610 | | 3.6[3] | 15.2[4] | 24.6 | 44.4 | | 6.6[4] | 21.0 | 32.6 | 56.1 | 1.0[3] | 8.4[4] | 23.6 | 37.9 | 64.7 | 1.6[3] | 9.0 | 24.8 | 40.4 | 71.5 |
| 2.80 | 305 | 2.9[3] | 7.7[4] | 18.2 | 27.2 | 45.1 | 4.4[3] | 10.9 | 23.9 | 34.7 | 55.8 | 5.5[4] | 13.0 | 27.3 | 40.7 | 64.5 | 6.2[4] | 13.7 | 28.2 | 43.4 | 71.7 |
| | 406 | | 4.5[3] | 15.1[3] | 23.8 | 41.8 | 1.2[3] | 7.5[3] | 20.4[4] | 31.1 | 52.4 | 2.2[3] | 9.3[4] | 23.5 | 36.7 | 60.5 | 2.8[3] | 9.9[4] | 24.5 | 39.4 | 67.6 |
| | 610 | | | 9.4[3] | 17.7[3] | 35.8[4] | | 1.2[3] | 14.0[3] | 24.3[3] | 45.9 | | 2.5[3] | 16.7[3] | 29.3[4] | 53.0 | | 3.0[3] | 17.7[3] | 31.8 | 59.9 |
| 3.20 | 305 | 0.2[2] | 4.4[3] | 13.9[3] | 21.7[4] | 37.7 | 1.3[3] | 7.1[3] | 18.5[4] | 28.1 | 47.1 | 2.3[3] | 8.9[3] | 21.8[4] | 33.4 | 54.5 | 2.9[3] | 9.5[4] | 22.8 | 36.6 | 62.2 |
| | 406 | | 0.9[2] | 10.4[3] | 17.9[3] | 34.0[4] | | 3.2[3] | 14.6[3] | 24.0[3] | 43.1 | | 4.6[3] | 17.5[3] | 28.8[4] | 49.8 | | 5.2[3] | 18.6[3] | 31.8 | 57.2 |
| | 610 | | | 4.2[2] | 11.2[2] | 27.2[3] | | | 7.7[2] | 16.6[3] | 35.7[3] | | | 9.9[2] | 20.5[3] | 41.3[4] | | | 10.9[3] | 23.1[3] | 48.2[4] |
| 3.60 | 305 | | 1.4[2] | 9.8[3] | 16.4[3] | 30.5[4] | | 3.6[2] | 13.6[3] | 21.8[3] | 38.5 | | 5.0[3] | 16.5[3] | 26.2[4] | 44.7 | | 5.6[3] | 17.6[3] | 29.3[4] | 52.0 |
| | 406 | | | 6.2[2] | 12.5[2] | 26.5[3] | | | 9.5[2] | 17.5[3] | 34.2[3] | | 0.4[2] | 12.0[3] | 21.3[3] | 39.7[4] | | 0.8[2] | 13.0[3] | 24.1[3] | 46.5 |
| | 610 | | | | 5.6[1] | 19.4[2] | | | 2.5[1] | 9.9[2] | 26.5[3] | | | 4.0[2] | 12.8[2] | 30.7[3] | | | 4.8[2] | 15.0[2] | 36.8[3] |
| 4.00 | 305 | | | 6.3[2] | 11.8[2] | 23.8[3] | | 0.6[2] | 9.3[2] | 16.2[3] | 30.7[3] | | 1.6[2] | 11.6[3] | 19.7[3] | 35.7[4] | | 2.0[2] | 12.9[3] | 22.6[3] | 42.0[4] |
| | 406 | | | 2.7[1] | 7.9[2] | 19.8[2] | | | 5.3[2] | 11.9[2] | 26.3[3] | | | 7.0[2] | 14.8[2] | 30.6[3] | | | 8.0[2] | 17.3[3] | 36.4[3] |
| | 610 | | | | 1.2[1] | 12.9[1] | | | | 4.4[1] | 18.7[2] | | | | 6.4[1] | 21.7[2] | | | | 8.1[2] | 26.6[2] |
| 4.40 | 305 | | | 3.4[1] | 8.0[2] | 18.3[2] | | | 5.8[2] | 11.5[2] | 23.9[3] | | | 7.5[2] | 14.3[2] | 27.9[3] | | | 8.8[2] | 16.9[3] | 33.2[3] |
| | 406 | | | | 4.2[1] | 14.4[2] | | | 1.9[1] | 7.4[1] | 19.7[2] | | | 3.1[1] | 9.6[2] | 22.9[2] | | | 3.9[1] | 11.7[2] | 27.7[3] |
| | 610 | | | | | 7.7[1] | | | | 0.3[1] | 12.3[1] | | | | 1.5[1] | 14.3[1] | | | | 2.6[1] | 18.1[2] |
| 4.80 | 305 | | | 1.2[1] | 5.0[1] | 13.8[2] | | | 3.1[1] | 7.9[1] | 18.5[2] | | | 4.3[1] | 10.0[2] | 21.7[3] | | | 5.3[1] | 12.1[2] | 26.0[3] |
| | 406 | | | | 1.4[1] | 10.1[1] | | | | 3.9[1] | 14.4[1] | | | | 5.5[1] | 16.8[2] | | | 0.5[1] | 7.0[1] | 20.7[2] |
| | 610 | | | | | 3.7[1] | | | | | 7.4[1] | | | | | 8.6[1] | | | | | 11.5[1] |
| 5.20 | 305 | | | | 2.7[1] | 10.3[1] | | | 0.9[1] | 5.0[1] | 14.2[2] | | | 1.7[1] | 6.6[1] | 16.6[2] | | | 2.4[1] | 8.2[1] | 20.2[2] |
| | 406 | | | | | 6.7[1] | | | | 1.2[1] | 10.3[1] | | | | 2.3[1] | 12.0[1] | | | | 3.3[1] | 15.1[2] |
| | 610 | | | | | 0.7[1] | | | | | 3.7[1] | | | | | 4.2[1] | | | | | 6.4[1] |
| 5.60 | 305 | | | | 0.9[1] | 7.4[1] | | | | 2.7[1] | 10.8[1] | | | | 3.9[1] | 12.6[1] | | | 0.1[1] | 5.1[1] | 15.5[2] |
| | 406 | | | | | 4.1[1] | | | | | 7.0[1] | | | | | 8.2[1] | | | | 0.5[1] | 10.7[1] |
| | 610 | | | | | | | | | | 0.7[1] | | | | | 0.7[1] | | | | | 2.4[1] |
| 6.00 | 305 | | | | | 5.2[1] | | | | 1.0[1] | 8.0[1] | | | | 1.8[1] | 9.3[1] | | | | 2.6[1] | 11.8[1] |
| | 406 | | | | | 2.0[1] | | | | | 4.4[1] | | | | | 5.1[1] | | | | | 7.1[1] |
| | 610 | | | | | | | | | | | | | | | | | | | | |

[1] Deflection meets L/120 [3] Deflection meets L/360

[2] Deflection meets L/240 [4] Deflection meets L/600

If no note, deflection meets L/720

Bailey Metal Products, Dass Metal Products, DCM Metal Corp., EB Metal Inc., Imperial Building Products, Manugypse, Groupe UP, Trebor Building Products Ltd.

# COMBINED AXIAL AND LATERAL LOAD TABLE

Limiting Factored Axial Compressive Resistance Per Stud (kN)

## 3.00 kPa Factored Lateral Load

| Wall Height (m) | Stud Spacing (mm) | 400S162 | | | | | 400S200 | | | | | 400S250 | | | | | 400S300 | | | | |
|---|---|---|---|---|---|---|---|---|---|---|---|---|---|---|---|---|---|---|---|---|---|
| | | 230 MPa | | 345 MPa | | | 230 MPa | | 345 MPa | | | 230 MPa | | 345 MPa | | | 230 MPa | | 345 MPa | | |
| | | 33 | 43 | 54 | 68 | 97 | 33 | 43 | 54 | 68 | 97 | 33 | 43 | 54 | 68 | 97 | 33 | 43 | 54 | 68 | 97 |
| 2.40 | 305 | 4.3[4] | 9.5 | 21.0 | 30.7 | 50.3 | 6.0 | 13.1 | 27.5 | 39.3 | 62.3 | 7.2 | 15.2 | 30.4 | 45.2 | 71.9 | 8.0 | 15.9 | 31.5 | 47.6 | 78.8 |
| | 406 | 1.4[3] | 6.4[4] | 18.0 | 27.6 | 47.3 | 2.9[3] | 9.8 | 24.1 | 35.8 | 59.2 | 4.0[4] | 11.7 | 26.9 | 41.5 | 68.3 | 4.7[4] | 12.4 | 28.1 | 44.0 | 75.1 |
| | 610 | | 0.8[3] | 12.5[3] | 21.7[4] | 41.6 | | 3.6[3] | 17.9[4] | 29.4 | 53.1 | | 5.2[3] | 20.5[4] | 34.5 | 61.2 | | 5.7[4] | 21.7 | 37.0 | 68.0 |
| 2.80 | 305 | 1.1[3] | 5.8[3] | 16.3[4] | 25.1 | 43.1 | 2.5[3] | 8.8[4] | 21.8 | 32.5 | 53.7 | 3.5[3] | 10.7 | 25.0 | 38.3 | 62.0 | 4.2[3] | 11.4 | 26.0 | 41.0 | 69.2 |
| | 406 | | 2.2[3] | 12.8[3] | 21.3[4] | 39.3 | | 4.9[3] | 17.8[3] | 28.3[4] | 49.7 | | 6.4[3] | 20.7[4] | 33.6 | 57.4 | 0.2[3] | 7.1[3] | 21.7[4] | 36.3 | 64.4 |
| | 610 | | | 6.3[2] | 14.3[3] | 32.4[3] | | | 10.5[3] | 20.6[3] | 42.2[4] | | | 12.9[3] | 25.1[3] | 48.7 | | | 13.9[3] | 27.6[4] | 55.5 |
| 3.20 | 305 | | 2.2[3] | 11.7[3] | 19.4[3] | 35.4 | | 4.7[3] | 16.1[3] | 25.6[4] | 44.7 | | 6.3[3] | 19.2[3] | 30.6 | 51.6 | 0.5[3] | 6.9[3] | 20.2[4] | 33.7 | 59.2 |
| | 406 | | | 7.8[2] | 15.1[3] | 31.2[3] | | 0.4[2] | 11.7[3] | 20.9[3] | 40.0[4] | | 1.5[3] | 14.3[3] | 25.3[3] | 46.3 | | 1.9[3] | 15.4[3] | 28.2[4] | 53.5 |
| | 610 | | | 0.9[1] | 7.6[2] | 23.5[3] | | | 4.0[2] | 12.6[2] | 31.7[3] | | | 5.7[2] | 16.0[3] | 36.6[3] | | | 6.6[2] | 18.4[3] | 43.2[3] |
| 3.60 | 305 | | | 7.6[2] | 14.0[3] | 28.0[3] | | 1.1[2] | 11.1[3] | 19.1[3] | 35.9[4] | | 2.2[2] | 13.7[3] | 23.2[3] | 41.6 | | 2.7[3] | 14.8[3] | 26.1[3] | 48.7 |
| | 406 | | | 3.5[1] | 9.6[2] | 23.5[3] | | | 6.6[2] | 14.3[2] | 31.0[3] | | | 8.6[2] | 17.7[3] | 35.9[3] | | | 9.5[2] | 20.3[3] | 42.5[4] |
| | 610 | | | | 2.0[1] | 15.6[2] | | | | 5.8[1] | 22.4[2] | | | | 8.2[2] | 25.9[3] | | | 0.4[1] | 10.1[2] | 31.5[3] |
| 4.00 | 305 | | | 4.1[1] | 9.4[2] | 21.4[3] | | | 6.8[2] | 13.5[2] | 28.0[3] | | | 8.8[2] | 16.7[3] | 32.6[3] | | | 9.9[2] | 19.4[3] | 38.6[3] |
| | 406 | | | 0.1[1] | 5.0[1] | 16.9[2] | | | 2.3[1] | 8.7[2] | 23.1[2] | | | 3.7[1] | 11.3[2] | 26.9[3] | | | 4.5[2] | 13.5[2] | 32.3[3] |
| | 610 | | | | | 9.2[1] | | | | 0.5[1] | 14.6[1] | | | | 1.9[1] | 16.9[2] | | | | 3.2[1] | 21.3[2] |
| 4.40 | 305 | | | 1.3[1] | 5.7[1] | 15.9[2] | | | 3.4[1] | 9.0[2] | 21.3[2] | | | 4.8[1] | 11.4[2] | 24.9[3] | | | 5.8[2] | 13.7[2] | 29.8[3] |
| | 406 | | | | 1.5[1] | 11.6[1] | | | | 4.4[1] | 16.6[2] | | | | 6.1[1] | 19.3[2] | | | 0.4[1] | 7.9[1] | 23.7[2] |
| | 610 | | | | | 4.2[1] | | | | | 8.4[1] | | | | | 9.7[1] | | | | | 13.1[1] |
| 4.80 | 305 | | | | 2.8[1] | 11.5[1] | | | 0.8[1] | 5.4[1] | 16.0[2] | | | 1.6[1] | 7.2[1] | 18.7[2] | | | 2.3[1] | 8.9[2] | 22.7[2] |
| | 406 | | | | | 7.4[1] | | | | 1.0[1] | 11.5[1] | | | | 2.2[1] | 13.4[1] | | | | 3.3[1] | 16.8[2] |
| | 610 | | | | | 0.4[1] | | | | | 3.7[1] | | | | | 4.2[1] | | | | | 6.7[1] |
| 5.20 | 305 | | | | 0.6[1] | 8.1[1] | | | | 2.7[1] | 11.8[1] | | | | 3.9[1] | 13.8[1] | | | | 5.2[1] | 17.1[2] |
| | 406 | | | | | 4.2[1] | | | | | 7.5[1] | | | | | 8.7[1] | | | | | 11.4[1] |
| | 610 | | | | | | | | | | 0.2[1] | | | | | | | | | | 1.8[1] |
| 5.60 | 305 | | | | | 5.4[1] | | | | 0.5[1] | 8.5[1] | | | | 1.4[1] | 9.9[1] | | | | 2.2[1] | 12.5[1] |
| | 406 | | | | | 1.7[1] | | | | | 4.4[1] | | | | | 5.0[1] | | | | | 7.2[1] |
| | 610 | | | | | | | | | | | | | | | | | | | | |
| 6.00 | 305 | | | | | 3.2[1] | | | | | 5.8[1] | | | | | 6.8[1] | | | | | 8.9[1] |
| | 406 | | | | | | | | | | 1.9[1] | | | | | 2.1[1] | | | | | 3.8[1] |
| | 610 | | | | | | | | | | | | | | | | | | | | |

[1] Deflection meets L/120 [3] Deflection meets L/360

[2] Deflection meets L/240 [4] Deflection meets L/600

If no note, deflection meets L/720

Bailey Metal Products, Dass Metal Products, DCM Metal Corp., EB Métal Inc., Imperial Building Products, Manugypse, Groupe UP, Trebor Building Products Ltd.

# COMBINED AXIAL AND LATERAL LOAD TABLE

Limiting Factored Axial Compressive Resistance Per Stud (kN)

## 3.50 kPa Factored Lateral Load

| Wall Height (m) | Stud Spacing (mm) | 400S162 | | | | | 400S200 | | | | | 400S250 | | | | | 400S300 | | | | |
|---|---|---|---|---|---|---|---|---|---|---|---|---|---|---|---|---|---|---|---|---|---|
| | | 230 MPa | | 345 MPa | | | 230 MPa | | 345 MPa | | | 230 MPa | | 345 MPa | | | 230 MPa | | 345 MPa | | |
| | | 33 | 43 | 54 | 68 | 97 | 33 | 43 | 54 | 68 | 97 | 33 | 43 | 54 | 68 | 97 | 33 | 43 | 54 | 68 | 97 |
| 2.40 | 305 | 2.8[3] | 7.9 | 19.5 | 29.2 | 48.8 | 4.4[4] | 11.4 | 25.8 | 37.5 | 60.7 | 5.6 | 13.5 | 28.6 | 43.3 | 70.1 | 6.3 | 14.1 | 29.8 | 45.8 | 76.9 |
| | 406 | | 4.5[3] | 16.1[4] | 25.6 | 45.4 | 0.9[3] | 7.7[4] | 22.0 | 33.6 | 57.1 | 2.0[3] | 9.5 | 24.7 | 39.1 | 65.9 | 2.6[4] | 10.1 | 25.9 | 41.6 | 72.7 |
| | 610 | | | 9.9[3] | 19.0[3] | 38.9 | | 0.7[3] | 15.0[3] | 26.3[4] | 50.2 | | 2.1[3] | 17.4[3] | 31.2 | 57.9 | | 2.6[3] | 18.6[4] | 33.6 | 64.6 |
| 2.80 | 305 | | 3.9[3] | 14.5[3] | 23.2[4] | 41.2 | 0.6[3] | 6.8[3] | 19.7[4] | 30.4 | 51.7 | 1.6[3] | 8.5[4] | 22.8 | 35.9 | 59.7 | 2.2[3] | 9.2[4] | 23.8 | 38.6 | 66.8 |
| | 406 | | | 10.5[3] | 18.9[3] | 37.0[4] | | 2.4[3] | 15.2[3] | 25.6[4] | 47.1 | | 3.8[3] | 18.0[3] | 30.7[4] | 54.4 | | 4.3[3] | 19.0[4] | 33.3 | 61.4 |
| | 610 | | | 3.3[2] | 11.1[2] | 29.2[3] | | | 7.2[2] | 17.1[3] | 38.8[3] | | | 9.3[3] | 21.2[3] | 44.7[4] | | | 10.3[3] | 23.6[3] | 51.3 |
| 3.20 | 305 | | 0.2[2] | 9.7[3] | 17.2[3] | 33.3[4] | | 2.5[3] | 13.9[3] | 23.2[3] | 42.3 | | 3.8[3] | 16.7[3] | 27.9[4] | 48.9 | | 4.4[3] | 17.7[3] | 30.9[4] | 56.3 |
| | 406 | | | 5.4[2] | 12.5[2] | 28.5[3] | | | 9.0[2] | 18.0[3] | 37.1[3] | | | 11.3[3] | 22.1[3] | 42.9[4] | | | 12.3[3] | 24.8[3] | 49.9 |
| | 610 | | | | 4.2[1] | 20.0[2] | | | 0.5[1] | 8.8[2] | 27.9[3] | | | 1.8[2] | 11.8[2] | 32.2[3] | | | 2.7[2] | 13.9[2] | 38.4[3] |
| 3.60 | 305 | | | 5.5[2] | 11.7[2] | 25.7[3] | | | 8.8[2] | 16.6[3] | 33.4[3] | | | 11.1[2] | 20.4[3] | 38.7[4] | | | 12.1[3] | 23.1[3] | 45.5[4] |
| | 406 | | | 1.0[1] | 6.9[2] | 20.7[2] | | | 3.8[1] | 11.3[2] | 28.0[3] | | | 5.5[2] | 14.4[2] | 32.4[3] | | | 6.3[2] | 16.7[3] | 38.6[3] |
| | 610 | | | | | 12.1[1] | | | | 2.0[1] | 18.5[2] | | | | 3.9[1] | 21.3[2] | | | | 5.5[2] | 26.6[2] |
| 4.00 | 305 | | | 2.0[1] | 7.1[1] | 19.1[2] | | | 4.5[1] | 11.1[2] | 25.5[3] | | | 6.2[2] | 13.9[2] | 29.6[3] | | | 7.1[2] | 16.3[2] | 35.3[3] |
| | 406 | | | | 2.4[1] | 14.2[2] | | | | 5.8[1] | 20.1[2] | | | 0.6[1] | 8.0[2] | 23.3[2] | | | 1.3[1] | 9.8[2] | 28.4[3] |
| | 610 | | | | | 5.7[1] | | | | | 10.8[1] | | | | | 12.4[1] | | | | | 16.4[2] |
| 4.40 | 305 | | | | 3.5[1] | 13.6[2] | | | 1.2[1] | 6.6[1] | 18.9[2] | | | 2.2[1] | 8.7[2] | 22.0[2] | | | 3.0[1] | 10.7[2] | 26.6[3] |
| | 406 | | | | | 8.9[1] | | | | 1.6[1] | 13.7[1] | | | | 3.0[1] | 15.9[2] | | | | 4.3[1] | 19.9[2] |
| | 610 | | | | | 0.9[1] | | | | | 4.8[1] | | | | | 5.5[1] | | | | | 8.4[1] |
| 4.80 | 305 | | | | 0.8[1] | 9.4[1] | | | | 3.2[1] | 13.7[1] | | | | 4.6[1] | 15.9[2] | | | | 6.1[1] | 19.7[2] |
| | 406 | | | | | 4.9[1] | | | | | 8.7[1] | | | | | 10.1[1] | | | | | 13.2[1] |
| | 610 | | | | | | | | | | 0.3[1] | | | | | 0.2[1] | | | | | 2.2[1] |
| 5.20 | 305 | | | | | 6.1[1] | | | | 0.5[1] | 9.6[1] | | | | 1.5[1] | 11.2[1] | | | | 2.4[1] | 14.2[1] |
| | 406 | | | | | 1.8[1] | | | | | 4.9[1] | | | | | 5.6[1] | | | | | 8.0[1] |
| | 610 | | | | | | | | | | | | | | | | | | | | |
| 5.60 | 305 | | | | | 3.5[1] | | | | | 6.4[1] | | | | | 7.4[1] | | | | | 9.8[1] |
| | 406 | | | | | | | | | | 1.9[1] | | | | | 2.1[1] | | | | | 3.9[1] |
| | 610 | | | | | | | | | | | | | | | | | | | | |
| 6.00 | 305 | | | | | 1.4[1] | | | | | 3.8[1] | | | | | 4.4[1] | | | | | 6.2[1] |
| | 406 | | | | | | | | | | | | | | | | | | | | 0.7[1] |
| | 610 | | | | | | | | | | | | | | | | | | | | |

[1] Deflection meets L/120 [3] Deflection meets L/360

[2] Deflection meets L/240 [4] Deflection meets L/600

If no note, deflection meets L/720

Bailey Metal Products, Dass Metal Products, DCM Metal Corp., EB Metal Inc., Imperial Building Products, Manugypse, Groupe UP, Trebor Building Products Ltd.

# COMBINED AXIAL AND LATERAL LOAD TABLE

Limiting Factored Axial Compressive Resistance Per Stud (kN)

## 0 kPa Factored Lateral Load

| Wall Height (m) | Stud Spacing (mm) | 600S162 | | | | | 600S200 | | | | | 600S250 | | | | | 600S300 | | | | |
|---|---|---|---|---|---|---|---|---|---|---|---|---|---|---|---|---|---|---|---|---|---|
| | | 230 MPa | | 345 MPa | | | 230 MPa | | 345 MPa | | | 230 MPa | | 345 MPa | | | 230 MPa | | 345 MPa | | |
| | | 33 | 43 | 54 | 68 | 97 | 33 | 43 | 54 | 68 | 97 | 33 | 43 | 54 | 68 | 97 | 33 | 43 | 54 | 68 | 97 |
| 2.40 | 305 | 16.4 | 22.5 | 36.6 | 48.4 | 73.7 | 19.0 | 28.6 | 48.8 | 64.8 | 101 | 20.6 | 30.8 | 49.9 | 71.9 | 118 | 21.5 | 31.4 | 51.8 | 72.7 | 126 |
| | 406 | 16.4 | 22.5 | 36.6 | 48.4 | 73.7 | 19.0 | 28.6 | 48.8 | 64.8 | 101 | 20.6 | 30.8 | 49.9 | 71.9 | 118 | 21.5 | 31.4 | 51.8 | 72.7 | 126 |
| | 610 | 16.4 | 22.5 | 36.6 | 48.4 | 73.7 | 19.0 | 28.6 | 48.8 | 64.8 | 101 | 20.6 | 30.8 | 49.9 | 71.9 | 118 | 21.5 | 31.4 | 51.8 | 72.7 | 126 |
| 2.80 | 305 | 16.4 | 22.5 | 36.6 | 48.4 | 73.7 | 18.9 | 28.3 | 47.9 | 63.7 | 99.4 | 20.4 | 30.5 | 49.1 | 70.5 | 116 | 21.2 | 31.1 | 51.0 | 71.4 | 123 |
| | 406 | 16.4 | 22.5 | 36.6 | 48.4 | 73.7 | 18.9 | 28.2 | 47.9 | 63.7 | 99.4 | 20.4 | 30.5 | 49.1 | 70.5 | 116 | 21.2 | 31.1 | 51.0 | 71.4 | 123 |
| | 610 | 16.4 | 22.5 | 36.6 | 48.4 | 73.7 | 18.9 | 28.2 | 47.9 | 63.7 | 99.4 | 20.4 | 30.5 | 49.1 | 70.5 | 116 | 21.2 | 31.1 | 51.0 | 71.4 | 123 |
| 3.20 | 305 | 16.3 | 22.5 | 36.6 | 48.4 | 73.7 | 18.6 | 27.8 | 46.8 | 62.1 | 96.9 | 20.1 | 30.1 | 48.1 | 68.8 | 112 | 20.9 | 30.7 | 49.9 | 69.9 | 120 |
| | 406 | 16.3 | 22.5 | 36.6 | 48.4 | 73.7 | 18.6 | 27.8 | 46.8 | 62.1 | 96.9 | 20.1 | 30.1 | 48.1 | 68.8 | 112 | 20.9 | 30.7 | 49.9 | 69.8 | 120 |
| | 610 | 16.3 | 22.5 | 36.6 | 48.4 | 73.7 | 18.6 | 27.8 | 46.8 | 62.1 | 96.9 | 20.1 | 30.1 | 48.1 | 68.8 | 112 | 20.9 | 30.7 | 49.9 | 69.8 | 120 |
| 3.60 | 305 | 16.0 | 22.2 | 36.3 | 48.4 | 73.7 | 18.4 | 27.2 | 45.3 | 60.2 | 93.8 | 19.8 | 29.6 | 46.9 | 66.8 | 108 | 20.6 | 30.2 | 48.6 | 68.2 | 116 |
| | 406 | 16.0 | 22.2 | 36.3 | 48.4 | 73.7 | 18.4 | 27.2 | 45.3 | 60.2 | 93.8 | 19.8 | 29.6 | 46.9 | 66.8 | 108 | 20.6 | 30.2 | 48.6 | 68.2 | 116 |
| | 610 | 16.0 | 22.2 | 36.3 | 48.4 | 73.6 | 18.4 | 27.2 | 45.3 | 60.2 | 93.8 | 19.8 | 29.6 | 46.9 | 66.8 | 108 | 20.6 | 30.2 | 48.6 | 68.2 | 116 |
| 4.00 | 305 | 15.7 | 21.8 | 35.2 | 47.4 | 73.7 | 18.0 | 26.5 | 43.5 | 57.8 | 90.0 | 19.4 | 29.0 | 45.4 | 64.5 | 104 | 20.1 | 29.6 | 47.2 | 66.3 | 111 |
| | 406 | 15.7 | 21.8 | 35.2 | 47.4 | 73.6 | 18.0 | 26.5 | 43.5 | 57.8 | 90.0 | 19.4 | 29.0 | 45.4 | 64.5 | 104 | 20.1 | 29.6 | 47.2 | 66.3 | 111 |
| | 610 | 15.7 | 21.8 | 35.2 | 47.4 | 73.6 | 18.0 | 26.5 | 43.5 | 57.8 | 90.0 | 19.4 | 29.0 | 45.4 | 64.5 | 104 | 20.1 | 29.6 | 47.2 | 66.3 | 111 |
| 4.40 | 305 | 15.3 | 21.2 | 33.9 | 45.5 | 72.1 | 17.6 | 25.7 | 41.5 | 55.1 | 85.5 | 18.9 | 28.3 | 44.1 | 62.0 | 98.3 | 19.7 | 28.9 | 45.5 | 64.2 | 106 |
| | 406 | 15.3 | 21.2 | 33.9 | 45.5 | 72.1 | 17.6 | 25.7 | 41.5 | 55.1 | 85.5 | 18.9 | 28.3 | 44.1 | 62.0 | 98.3 | 19.7 | 28.9 | 45.5 | 64.2 | 106 |
| | 610 | 15.3 | 21.2 | 33.9 | 45.5 | 72.1 | 17.5 | 25.7 | 41.5 | 55.1 | 85.5 | 18.9 | 28.3 | 44.1 | 62.0 | 98.3 | 19.7 | 28.9 | 45.5 | 64.2 | 106 |
| 4.80 | 305 | 14.8 | 20.5 | 32.2 | 43.2 | 68.3 | 17.1 | 24.7 | 39.2 | 52.0 | 80.7 | 18.4 | 27.6 | 42.8 | 59.4 | 92.7 | 19.2 | 28.2 | 43.7 | 62.0 | 101 |
| | 406 | 14.8 | 20.5 | 32.2 | 43.2 | 68.3 | 17.1 | 24.7 | 39.2 | 52.0 | 80.7 | 18.4 | 27.6 | 42.8 | 59.4 | 92.7 | 19.2 | 28.2 | 43.7 | 62.0 | 101 |
| | 610 | 14.8 | 20.5 | 32.2 | 43.2 | 68.3 | 17.0 | 24.7 | 39.2 | 52.0 | 80.7 | 18.4 | 27.6 | 42.8 | 59.3 | 92.7 | 19.1 | 28.2 | 43.7 | 62.0 | 101 |
| 5.20 | 305 | 14.2 | 19.7 | 30.3 | 40.7 | 64.1 | 16.5 | 23.7 | 36.7 | 48.7 | 75.5 | 17.8 | 26.7 | 41.3 | 56.7 | 86.8 | 18.6 | 27.4 | 41.8 | 59.6 | 95.7 |
| | 406 | 14.2 | 19.7 | 30.3 | 40.7 | 64.1 | 16.5 | 23.7 | 36.7 | 48.7 | 75.5 | 17.8 | 26.7 | 41.3 | 56.7 | 86.8 | 18.6 | 27.4 | 41.8 | 59.6 | 95.7 |
| | 610 | 14.2 | 19.7 | 30.3 | 40.7 | 64.1 | 16.5 | 23.7 | 36.7 | 48.7 | 75.5 | 17.8 | 26.7 | 41.2 | 56.7 | 86.8 | 18.6 | 27.4 | 41.8 | 59.6 | 95.7 |
| 5.60 | 305 | 13.6 | 18.9 | 28.3 | 38.0 | 59.6 | 15.8 | 22.6 | 34.2 | 45.4 | 70.1 | 17.1 | 25.8 | 39.1 | 52.8 | 80.7 | 17.9 | 26.5 | 39.8 | 56.7 | 90.6 |
| | 406 | 13.6 | 18.9 | 28.3 | 38.0 | 59.6 | 15.8 | 22.6 | 34.2 | 45.4 | 70.1 | 17.1 | 25.8 | 39.1 | 52.8 | 80.7 | 17.9 | 26.5 | 39.8 | 56.7 | 90.6 |
| | 610 | 13.6 | 18.9 | 28.3 | 38.0 | 59.6 | 15.8 | 22.6 | 34.2 | 45.4 | 70.1 | 17.1 | 25.8 | 39.1 | 52.8 | 80.7 | 17.9 | 26.5 | 39.8 | 56.7 | 90.6 |
| 6.00 | 305 | 12.9 | 17.9 | 26.2 | 35.1 | 54.9 | 15.2 | 21.5 | 31.6 | 41.9 | 64.6 | 16.5 | 24.8 | 37.0 | 48.8 | 74.6 | 17.3 | 25.6 | 37.7 | 53.1 | 84.4 |
| | 406 | 12.9 | 17.9 | 26.2 | 35.1 | 54.9 | 15.2 | 21.5 | 31.6 | 41.9 | 64.6 | 16.5 | 24.8 | 37.0 | 48.8 | 74.6 | 17.3 | 25.6 | 37.7 | 53.0 | 84.4 |
| | 610 | 12.9 | 17.9 | 26.2 | 35.1 | 54.9 | 15.2 | 21.4 | 31.6 | 41.9 | 64.6 | 16.5 | 24.8 | 37.0 | 48.8 | 74.6 | 17.3 | 25.6 | 37.6 | 53.0 | 84.4 |

[1] Deflection meets L/120 [3] Deflection meets L/360

[2] Deflection meets L/240 [4] Deflection meets L/600

If no note, deflection meets L/720

Bailey Metal Products, Dass Metal Products, DCM Metal Corp., EB Metal Inc., Imperial Building Products, Manugypse, Groupe UP, Trebor Building Products Ltd.

# COMBINED AXIAL AND LATERAL LOAD TABLE

Limiting Factored Axial Compressive Resistance Per Stud (kN)

## 0.50 kPa Factored Lateral Load

| Wall Height (m) | Stud Spacing (mm) | 600S162 | | | | | 600S200 | | | | | 600S250 | | | | | 600S300 | | | | |
|---|---|---|---|---|---|---|---|---|---|---|---|---|---|---|---|---|---|---|---|---|---|
| | | 230 MPa | | 345 MPa | | | 230 MPa | | 345 MPa | | | 230 MPa | | 345 MPa | | | 230 MPa | | 345 MPa | | |
| | | 33 | 43 | 54 | 68 | 97 | 33 | 43 | 54 | 68 | 97 | 33 | 43 | 54 | 68 | 97 | 33 | 43 | 54 | 68 | 97 |
| 2.40 | 305 | 15.1 | 21.3 | 35.5 | 47.2 | 72.5 | 17.8 | 27.2 | 47.4 | 63.5 | 99.8 | 19.3 | 29.4 | 48.6 | 70.4 | 117 | 20.1 | 30.1 | 50.5 | 71.3 | 125 |
| | 406 | 14.7 | 20.9 | 35.1 | 46.9 | 72.1 | 17.4 | 26.8 | 47.0 | 63.0 | 99.3 | 18.9 | 29.0 | 48.2 | 70.0 | 116 | 19.7 | 29.6 | 50.1 | 70.9 | 124 |
| | 610 | 13.9 | 20.1 | 34.3 | 46.1 | 71.4 | 16.5 | 25.9 | 46.1 | 62.1 | 98.4 | 18.0 | 28.1 | 47.3 | 69.0 | 115 | 18.8 | 28.7 | 49.2 | 70.0 | 123 |
| 2.80 | 305 | 14.6 | 20.8 | 35.0 | 46.8 | 72.0 | 17.1 | 26.4 | 46.0 | 61.8 | 97.4 | 18.6 | 28.6 | 47.3 | 68.5 | 113 | 19.4 | 29.2 | 49.1 | 69.5 | 121 |
| | 406 | 14.1 | 20.3 | 34.5 | 46.2 | 71.5 | 16.5 | 25.7 | 45.4 | 61.1 | 96.7 | 18.0 | 28.0 | 46.7 | 67.9 | 113 | 18.8 | 28.6 | 48.5 | 68.9 | 120 |
| | 610 | 12.9 | 19.2 | 33.4 | 45.2 | 70.4 | 15.4 | 24.5 | 44.1 | 59.9 | 95.4 | 16.8 | 26.7 | 45.5 | 66.6 | 111 | 17.6 | 27.4 | 47.4 | 67.6 | 119 |
| 3.20 | 305 | 14.0 | 20.2 | 34.4 | 46.1 | 71.3 | 16.3 | 25.3 | 44.2 | 59.6 | 94.2 | 17.7 | 27.6 | 45.7 | 66.2 | 109 | 18.5 | 28.2 | 47.5 | 67.3 | 117 |
| | 406 | 13.2 | 19.5 | 33.7 | 45.4 | 70.6 | 15.6 | 24.5 | 43.4 | 58.7 | 93.3 | 17.0 | 26.7 | 44.9 | 65.3 | 108 | 17.7 | 27.4 | 46.7 | 66.5 | 116 |
| | 610 | 11.7 | 18.0 | 32.2 | 44.0 | 69.1 | 14.1 | 22.9 | 41.7 | 57.0 | 91.5 | 15.4 | 25.1 | 43.3 | 63.5 | 106 | 16.2 | 25.8 | 45.1 | 64.8 | 114 |
| 3.60 | 305 | 13.1 | 19.3 | 33.4 | 45.4 | 70.5 | 15.4 | 24.0 | 42.0 | 56.8 | 90.2 | 16.7 | 26.3 | 43.7 | 63.3 | 104 | 17.5 | 27.0 | 45.5 | 64.8 | 112 |
| | 406 | 12.1 | 18.3 | 32.4 | 44.4 | 69.5 | 14.4 | 23.0 | 40.9 | 55.7 | 89.0 | 15.8 | 25.3 | 42.7 | 62.2 | 103 | 16.5 | 26.0 | 44.5 | 63.8 | 111 |
| | 610 | 10.3 | 16.5 | 30.5 | 42.5 | 67.4 | 12.6 | 21.0 | 38.8 | 53.6 | 86.7 | 13.8 | 23.2 | 40.7 | 59.9 | 101 | 14.6 | 23.9 | 42.5 | 61.6 | 108 |
| 4.00 | 305 | 12.0 | 18.1 | 31.5 | 43.5 | 69.4 | 14.3 | 22.5 | 39.4 | 53.6 | 85.3 | 15.6 | 24.9 | 41.4 | 60.1 | 98.6 | 16.4 | 25.6 | 43.3 | 62.1 | 106 |
| | 406 | 10.9 | 16.9 | 30.3 | 42.3 | 68.0 | 13.1 | 21.3 | 38.1 | 52.2 | 83.9 | 14.4 | 23.6 | 40.2 | 58.6 | 97.0 | 15.2 | 24.3 | 42.0 | 60.7 | 105 |
| | 610 | 8.7 | 14.7 | 28.0 | 39.9 | 65.4 | 10.9 | 18.8 | 35.5 | 49.6 | 81.0 | 12.1 | 21.1 | 37.7 | 55.9 | 93.9 | 12.9 | 21.9 | 39.6 | 58.1 | 102 |
| 4.40 | 305 | 10.9 | 16.7 | 29.3 | 40.7 | 66.6 | 13.1 | 20.8 | 36.4 | 49.9 | 79.8 | 14.4 | 23.3 | 39.2 | 56.5 | 92.2 | 15.1 | 24.1 | 40.8 | 59.0 | 100 |
| | 406 | 9.6 | 15.4 | 27.9 | 39.2 | 64.9 | 11.7 | 19.4 | 34.9 | 48.2 | 78.0 | 13.0 | 21.8 | 37.6 | 54.8 | 90.2 | 13.7 | 22.6 | 39.3 | 57.3 | 98.0 |
| | 610 | 7.1 | 12.8 | 25.3 | 36.4 | 61.6 | 9.2 | 16.5 | 32.0 | 45.1 | 74.5 | 10.3 | 18.8 | 34.7 | 51.5 | 86.5 | 11.0 | 19.7 | 36.4 | 54.1 | 94.3 |
| 4.80 | 305 | 9.7 | 15.3 | 26.9 | 37.6 | 61.7 | 11.8 | 19.0 | 33.3 | 45.8 | 73.7 | 13.0 | 21.6 | 36.8 | 52.7 | 85.3 | 13.8 | 22.4 | 38.0 | 55.6 | 93.4 |
| | 406 | 8.2 | 13.7 | 25.3 | 35.8 | 59.6 | 10.3 | 17.4 | 31.5 | 44.0 | 71.6 | 11.4 | 19.8 | 35.0 | 50.7 | 83.0 | 12.2 | 20.7 | 36.3 | 53.6 | 91.1 |
| | 610 | 5.4[4] | 10.8 | 22.3 | 32.7 | 55.9 | 7.4 | 14.2 | 28.3 | 40.5 | 67.7 | 8.5 | 16.4 | 31.6 | 46.9 | 78.7 | 9.2 | 17.3 | 33.0 | 49.9 | 86.7 |
| 5.20 | 305 | 8.4 | 13.7 | 24.2 | 34.2 | 56.3 | 10.5 | 17.2 | 30.0 | 41.7 | 67.4 | 11.6 | 19.8 | 34.2 | 48.8 | 78.1 | 12.4 | 20.7 | 35.2 | 52.0 | 86.7 |
| | 406 | 6.8 | 12.0 | 22.5 | 32.3 | 54.1 | 8.8 | 15.3 | 28.1 | 39.6 | 65.0 | 9.9 | 17.7 | 32.1 | 46.5 | 75.5 | 10.6 | 18.7 | 33.2 | 49.7 | 84.1 |
| | 610 | 3.9[3] | 8.8[4] | 19.3 | 28.8 | 49.9 | 5.7[3] | 11.9 | 24.6 | 35.8 | 60.6 | 6.7[4] | 14.1 | 28.3 | 42.3 | 70.8 | 7.3[4] | 15.0 | 29.5 | 45.5 | 79.1 |
| 5.60 | 305 | 7.2 | 12.1 | 21.6 | 30.7 | 50.8 | 9.1 | 15.3 | 26.8 | 37.5 | 60.9 | 10.2 | 17.9 | 31.0 | 44.0 | 70.8 | 11.0 | 18.8 | 32.2 | 47.9 | 80.1 |
| | 406 | 5.5[4] | 10.3 | 19.8 | 28.7 | 48.4 | 7.3[4] | 13.3 | 24.8 | 35.3 | 58.4 | 8.3 | 15.7 | 28.8 | 41.5 | 68.1 | 9.0 | 16.6 | 30.1 | 45.3 | 77.1 |
| | 610 | 2.4[3] | 7.0[3] | 16.4[4] | 25.0 | 44.0 | 4.1[3] | 9.7[4] | 21.1 | 31.3 | 53.8 | 4.9[3] | 11.7[4] | 24.8 | 37.1 | 63.0 | 5.5[3] | 12.7 | 26.1 | 40.7 | 71.7 |
| 6.00 | 305 | 6.0[4] | 10.5 | 19.0 | 27.3 | 45.4 | 7.8 | 13.5 | 23.7 | 33.4 | 54.6 | 8.9 | 16.0 | 28.0 | 39.3 | 63.7 | 9.6 | 17.0 | 29.3 | 43.3 | 72.7 |
| | 406 | 4.2[3] | 8.6[4] | 17.1 | 25.2 | 42.9 | 5.9[3] | 11.4 | 21.6 | 31.1 | 52.0 | 6.9[4] | 13.6 | 25.7 | 36.8 | 60.8 | 7.5[4] | 14.6 | 26.9 | 40.6 | 69.5 |
| | 610 | 1.1[2] | 5.2[3] | 13.8[3] | 21.5[4] | 38.4 | 2.6[3] | 7.7[3] | 17.9[4] | 27.1 | 47.2 | 3.3[3] | 9.5[3] | 21.5[4] | 32.2 | 55.6 | 3.8[3] | 10.4[4] | 22.8 | 35.8 | 63.8 |

[1] Deflection meets L/120 [3] Deflection meets L/360

[2] Deflection meets L/240 [4] Deflection meets L/600

If no note, deflection meets L/720

Bailey Metal Products, Dass Metal Products, DCM Metal Corp., EB Metal Inc., Imperial Building Products, Manugypse, Groupe UP, Trebor Building Products Ltd.

# COMBINED AXIAL AND LATERAL LOAD TABLE

Limiting Factored Axial Compressive Resistance Per Stud (kN)

## 1.00 kPa Factored Lateral Load

| Wall Height (m) | Stud Spacing (mm) | 600S162 | | | | | 600S200 | | | | | 600S250 | | | | | 600S300 | | | | |
|---|---|---|---|---|---|---|---|---|---|---|---|---|---|---|---|---|---|---|---|---|---|
| | | 230 MPa | | 345 MPa | | | 230 MPa | | 345 MPa | | | 230 MPa | | 345 MPa | | | 230 MPa | | 345 MPa | | |
| | | 33 | 43 | 54 | 68 | 97 | 33 | 43 | 54 | 68 | 97 | 33 | 43 | 54 | 68 | 97 | 33 | 43 | 54 | 68 | 97 |
| 2.40 | 305 | 13.9 | 20.1 | 34.3 | 46.1 | 71.4 | 16.5 | 25.9 | 46.1 | 62.1 | 98.4 | 18.0 | 28.1 | 47.3 | 69.0 | 115 | 18.8 | 28.7 | 49.2 | 70.0 | 123 |
| | 406 | 13.1 | 19.3 | 33.6 | 45.4 | 70.6 | 15.7 | 25.0 | 45.2 | 61.2 | 97.5 | 17.1 | 27.2 | 46.4 | 68.1 | 114 | 18.0 | 27.8 | 48.3 | 69.1 | 122 |
| | 610 | 11.5 | 17.7 | 32.1 | 43.9 | 69.1 | 14.0 | 23.2 | 43.4 | 59.4 | 95.6 | 15.4 | 25.4 | 44.7 | 66.2 | 112 | 16.2 | 26.1 | 46.6 | 67.3 | 120 |
| 2.80 | 305 | 12.9 | 19.2 | 33.4 | 45.2 | 70.4 | 15.4 | 24.5 | 44.1 | 59.9 | 95.4 | 16.8 | 26.7 | 45.5 | 66.6 | 111 | 17.6 | 27.4 | 47.4 | 67.6 | 119 |
| | 406 | 11.8 | 18.1 | 32.3 | 44.1 | 69.3 | 14.3 | 23.3 | 42.9 | 58.6 | 94.1 | 15.6 | 25.5 | 44.3 | 65.3 | 110 | 16.4 | 26.2 | 46.2 | 66.4 | 118 |
| | 610 | 9.6 | 15.9 | 30.2 | 42.0 | 67.1 | 12.1 | 20.9 | 40.4 | 56.1 | 91.5 | 13.4 | 23.0 | 41.9 | 62.7 | 107 | 14.1 | 23.8 | 43.8 | 63.9 | 115 |
| 3.20 | 305 | 11.7 | 18.0 | 32.2 | 44.0 | 69.1 | 14.1 | 22.9 | 41.7 | 57.0 | 91.5 | 15.4 | 25.1 | 43.3 | 63.5 | 106 | 16.2 | 25.8 | 45.1 | 64.8 | 114 |
| | 406 | 10.3 | 16.6 | 30.8 | 42.5 | 67.6 | 12.6 | 21.3 | 40.1 | 55.4 | 89.8 | 13.9 | 23.5 | 41.7 | 61.8 | 105 | 14.7 | 24.2 | 43.6 | 63.1 | 112 |
| | 610 | 7.5 | 13.8 | 28.0 | 39.7 | 64.7 | 9.8 | 18.2 | 36.9 | 52.1 | 86.3 | 11.0 | 20.3 | 38.6 | 58.4 | 101 | 11.7 | 21.1 | 40.5 | 59.9 | 108 |
| 3.60 | 305 | 10.3 | 16.5 | 30.5 | 42.5 | 67.4 | 12.6 | 21.0 | 38.8 | 53.6 | 86.7 | 13.8 | 23.2 | 40.7 | 59.9 | 101 | 14.6 | 23.9 | 42.5 | 61.6 | 108 |
| | 406 | 8.5 | 14.7 | 28.7 | 40.6 | 65.5 | 10.8 | 19.0 | 36.8 | 51.5 | 84.4 | 12.0 | 21.2 | 38.7 | 57.8 | 98.2 | 12.7 | 21.9 | 40.6 | 59.5 | 106 |
| | 610 | 5.2 | 11.2 | 25.2 | 37.0 | 61.6 | 7.4 | 15.3 | 32.9 | 47.5 | 80.1 | 8.5 | 17.3 | 34.9 | 53.5 | 93.4 | 9.2 | 18.1 | 36.8 | 55.4 | 101 |
| 4.00 | 305 | 8.7 | 14.7 | 28.0 | 39.9 | 65.4 | 10.9 | 18.8 | 35.5 | 49.6 | 81.0 | 12.1 | 21.1 | 37.7 | 55.9 | 93.9 | 12.9 | 21.9 | 39.6 | 58.1 | 102 |
| | 406 | 6.7 | 12.6 | 25.9 | 37.6 | 62.8 | 8.8 | 16.5 | 33.1 | 47.0 | 78.2 | 9.9 | 18.7 | 35.3 | 53.2 | 90.9 | 10.7 | 19.5 | 37.2 | 55.5 | 98.5 |
| | 610 | 2.9[3] | 8.6[4] | 21.8 | 33.2 | 58.0 | 4.9[4] | 12.2 | 28.6 | 42.3 | 72.9 | 5.8[4] | 14.1 | 30.8 | 48.1 | 85.2 | 6.5 | 15.0 | 32.7 | 50.5 | 92.7 |
| 4.40 | 305 | 7.1 | 12.8 | 25.3 | 36.4 | 61.6 | 9.2 | 16.5 | 32.0 | 45.1 | 74.5 | 10.3 | 18.8 | 34.7 | 51.5 | 86.5 | 11.0 | 19.7 | 36.4 | 54.1 | 94.3 |
| | 406 | 4.8[4] | 10.4 | 22.8 | 33.7 | 58.5 | 6.8[4] | 13.9 | 29.2 | 42.2 | 71.3 | 7.8 | 16.0 | 31.9 | 48.4 | 83.0 | 8.5 | 16.9 | 33.6 | 51.0 | 90.7 |
| | 610 | 0.6[3] | 5.9[3] | 18.2[4] | 28.8 | 52.8 | 2.5[3] | 9.1[4] | 24.1 | 36.8 | 65.1 | 3.2[3] | 10.9[4] | 26.7 | 42.5 | 76.3 | 3.8[3] | 11.7 | 28.4 | 45.3 | 83.9 |
| 4.80 | 305 | 5.4[4] | 10.8 | 22.3 | 32.7 | 55.9 | 7.4 | 14.2 | 28.3 | 40.5 | 67.7 | 8.5 | 16.4 | 31.6 | 46.9 | 78.7 | 9.2 | 17.3 | 33.0 | 49.9 | 86.7 |
| | 406 | 3.0[3] | 8.1[4] | 19.6 | 29.7 | 52.4 | 4.8[3] | 11.3 | 25.2 | 37.3 | 64.0 | 5.7[4] | 13.3 | 28.4 | 43.4 | 74.7 | 6.4[4] | 14.2 | 29.9 | 46.4 | 82.6 |
| | 610 | | 3.3[3] | 14.6[3] | 24.3[4] | 46.1 | 0.2[3] | 6.1[3] | 19.8[3] | 31.4 | 57.2 | 0.8[3] | 7.7[3] | 22.6[4] | 36.9 | 67.4 | 1.2[3] | 8.5[3] | 24.1[4] | 39.8 | 75.0 |
| 5.20 | 305 | 3.9[3] | 8.8[4] | 19.3 | 28.8 | 49.9 | 5.7[3] | 11.9 | 24.6 | 35.8 | 60.6 | 6.7[4] | 14.1 | 28.3 | 42.3 | 70.8 | 7.3[4] | 15.0 | 29.5 | 45.5 | 79.1 |
| | 406 | 1.3[3] | 6.0[3] | 16.4[4] | 25.7 | 46.2 | 3.0[3] | 8.8[3] | 21.4[4] | 32.4 | 56.7 | 3.7[3] | 10.7[4] | 24.8 | 38.4 | 66.5 | 4.3[3] | 11.6[4] | 26.1 | 41.6 | 74.5 |
| | 610 | | 1.0[2] | 11.3[3] | 20.0[3] | 39.5[4] | | 3.3[3] | 15.7[3] | 26.2[3] | 49.5 | | 4.7[3] | 18.6[3] | 31.5[4] | 58.6 | | 5.5[3] | 19.9[3] | 34.5[4] | 66.2 |
| 5.60 | 305 | 2.4[3] | 7.0[3] | 16.4[4] | 25.0 | 44.0 | 4.1[3] | 9.7[4] | 21.1 | 31.3 | 53.8 | 4.9[3] | 11.7[4] | 24.8 | 37.1 | 63.0 | 5.5[3] | 12.7 | 26.1 | 40.7 | 71.7 |
| | 406 | | 4.0[3] | 13.5[3] | 21.8[3] | 40.2 | 1.2[2] | 6.5[3] | 17.8[3] | 27.8[4] | 49.6 | 1.9[3] | 8.2[3] | 21.1[4] | 33.1 | 58.5 | 2.3[3] | 9.0[3] | 22.5[4] | 36.6 | 66.8 |
| | 610 | | | 8.3[2] | 16.1[3] | 33.3[3] | | 0.9[2] | 12.1[3] | 21.5[3] | 42.3[4] | | 1.9[2] | 14.7[3] | 26.0[3] | 50.4 | | 2.6[3] | 16.0[3] | 29.2[3] | 58.0 |
| 6.00 | 305 | 1.1[2] | 5.2[3] | 13.8[3] | 21.5[4] | 38.4 | 2.6[3] | 7.7[3] | 17.9[4] | 27.1 | 47.2 | 3.3[3] | 9.5[3] | 21.5[4] | 32.2 | 55.6 | 3.8[3] | 10.4[4] | 22.8 | 35.8 | 63.8 |
| | 406 | | 2.2[2] | 10.8[3] | 18.2[3] | 34.5[4] | | 4.4[3] | 14.6[3] | 23.5[3] | 43.0 | 0.2[2] | 5.8[3] | 17.7[3] | 28.2[4] | 51.0 | 0.5[2] | 6.7[3] | 19.0[3] | 31.5[4] | 58.7 |
| | 610 | | | 5.6[2] | 12.5[2] | 27.7[3] | | | 8.9[2] | 17.2[3] | 35.7[3] | | | 11.2[2] | 21.1[3] | 42.9[3] | | 0.1[2] | 12.4[3] | 24.0[3] | 49.8[4] |

[1] Deflection meets L/120 [3] Deflection meets L/360

[2] Deflection meets L/240 [4] Deflection meets L/600

If no note, deflection meets L/720

Bailey Metal Products, Dass Metal Products, DCM Metal Corp., EB Metal Inc., Imperial Building Products, Manugypse, Groupe UP, Trebor Building Products Ltd.

# COMBINED AXIAL AND LATERAL LOAD TABLE

Limiting Factored Axial Compressive Resistance Per Stud (kN)

## 1.50 kPa Factored Lateral Load

| Wall Height (m) | Stud Spacing (mm) | 600S162 | | | | | 600S200 | | | | | 600S250 | | | | | 600S300 | | | | |
|---|---|---|---|---|---|---|---|---|---|---|---|---|---|---|---|---|---|---|---|---|---|
| | | 230 MPa | | 345 MPa | | | 230 MPa | | 345 MPa | | | 230 MPa | | 345 MPa | | | 230 MPa | | 345 MPa | | |
| | | 33 | 43 | 54 | 68 | 97 | 33 | 43 | 54 | 68 | 97 | 33 | 43 | 54 | 68 | 97 | 33 | 43 | 54 | 68 | 97 |
| 2.40 | 305 | 12.7 | 18.9 | 33.2 | 45.0 | 70.2 | 15.3 | 24.5 | 44.7 | 60.8 | 97.0 | 16.7 | 26.7 | 46.0 | 67.6 | 114 | 17.5 | 27.4 | 47.9 | 68.6 | 122 |
| | 406 | 11.5 | 17.7 | 32.1 | 43.9 | 69.1 | 14.0 | 23.2 | 43.4 | 59.4 | 95.6 | 15.4 | 25.4 | 44.7 | 66.2 | 112 | 16.2 | 26.1 | 46.6 | 67.3 | 120 |
| | 610 | 9.1 | 15.4 | 29.9 | 41.7 | 66.8 | 11.6 | 20.6 | 40.8 | 56.8 | 92.9 | 12.9 | 22.7 | 42.2 | 63.5 | 109 | 13.7 | 23.4 | 44.1 | 64.6 | 117 |
| 2.80 | 305 | 11.3 | 17.5 | 31.8 | 43.6 | 68.7 | 13.7 | 22.7 | 42.3 | 58.0 | 93.4 | 15.1 | 24.8 | 43.7 | 64.6 | 109 | 15.9 | 25.5 | 45.6 | 65.8 | 117 |
| | 406 | 9.6 | 15.9 | 30.2 | 42.0 | 67.1 | 12.1 | 20.9 | 40.4 | 56.1 | 91.5 | 13.4 | 23.0 | 41.9 | 62.7 | 107 | 14.1 | 23.8 | 43.8 | 63.9 | 115 |
| | 610 | 6.5 | 12.8 | 27.2 | 38.9 | 63.9 | 8.9 | 17.4 | 36.9 | 52.5 | 87.7 | 10.0 | 19.4 | 38.5 | 58.9 | 103 | 10.8 | 20.2 | 40.4 | 60.3 | 111 |
| 3.20 | 305 | 9.6 | 15.9 | 30.1 | 41.8 | 66.9 | 11.9 | 20.5 | 39.3 | 54.6 | 88.9 | 13.2 | 22.7 | 40.9 | 60.9 | 104 | 13.9 | 23.4 | 42.8 | 62.3 | 111 |
| | 406 | 7.5 | 13.8 | 28.0 | 39.7 | 64.7 | 9.8 | 18.2 | 36.9 | 52.1 | 86.3 | 11.0 | 20.3 | 38.6 | 58.4 | 101 | 11.7 | 21.1 | 40.5 | 59.9 | 108 |
| | 610 | 3.6 | 9.8 | 24.0 | 35.7 | 60.4 | 5.8 | 13.8 | 32.4 | 47.5 | 81.3 | 6.8 | 15.8 | 34.2 | 53.5 | 95.3 | 7.5 | 16.6 | 36.1 | 55.2 | 103 |
| 3.60 | 305 | 7.7 | 13.8 | 27.8 | 39.7 | 64.5 | 9.9 | 18.0 | 35.8 | 50.5 | 83.3 | 11.1 | 20.2 | 37.7 | 56.7 | 97.0 | 11.8 | 21.0 | 39.6 | 58.5 | 105 |
| | 406 | 5.2 | 11.2 | 25.2 | 37.0 | 61.6 | 7.4 | 15.3 | 32.9 | 47.5 | 80.1 | 8.5 | 17.3 | 34.9 | 53.5 | 93.4 | 9.2 | 18.1 | 36.8 | 55.4 | 101 |
| | 610 | 0.6[3] | 6.5[4] | 20.3 | 31.9 | 56.1 | 2.7[3] | 10.0 | 27.4 | 41.7 | 73.8 | 3.5[4] | 11.8 | 29.5 | 47.5 | 86.6 | 4.1[4] | 12.7 | 31.3 | 49.6 | 94.1 |
| 4.00 | 305 | 5.7 | 11.5 | 24.8 | 36.5 | 61.6 | 7.8 | 15.4 | 31.9 | 45.8 | 76.8 | 8.9 | 17.5 | 34.1 | 51.9 | 89.4 | 9.6 | 18.3 | 36.0 | 54.2 | 97.0 |
| | 406 | 2.9[3] | 8.6[4] | 21.8 | 33.2 | 58.0 | 4.9[4] | 12.2 | 28.6 | 42.3 | 72.9 | 5.8[4] | 14.1 | 30.8 | 48.2 | 85.2 | 6.5 | 15.0 | 32.7 | 50.5 | 92.7 |
| | 610 | | 3.1[3] | 16.2[3] | 27.2 | 51.2 | | 6.2[3] | 22.3[4] | 35.6 | 65.5 | 0.2[3] | 7.8[4] | 24.5 | 41.1 | 77.1 | 0.7[3] | 8.7[4] | 26.3 | 43.5 | 84.5 |
| 4.40 | 305 | 3.7[3] | 9.2 | 21.6 | 32.5 | 57.0 | 5.7[4] | 12.6 | 27.9 | 40.8 | 69.7 | 6.6[4] | 14.7 | 30.5 | 46.9 | 81.3 | 7.3 | 15.6 | 32.3 | 49.6 | 88.9 |
| | 406 | 0.6[3] | 5.9[3] | 18.2[4] | 28.8 | 52.8 | 2.5[3] | 9.1[4] | 24.1 | 36.8 | 65.1 | 3.2[3] | 10.9[4] | 26.7 | 42.5 | 76.4 | 3.8[3] | 11.7 | 28.4 | 45.3 | 83.9 |
| | 610 | | | 12.0[3] | 22.1[3] | 44.9 | | 2.5[3] | 17.2[3] | 29.5[4] | 56.8 | | 3.9[3] | 19.6[3] | 34.6 | 67.3 | | 4.7[3] | 21.3[4] | 37.3 | 74.5 |
| 4.80 | 305 | 1.8[3] | 6.9[3] | 18.3[4] | 28.3 | 50.8 | 3.6[3] | 9.9[4] | 23.8 | 35.7 | 62.2 | 4.4[3] | 11.9 | 26.9 | 41.7 | 72.8 | 5.0[3] | 12.8 | 28.4 | 44.7 | 80.6 |
| | 406 | | 3.3[3] | 14.6[3] | 24.3[4] | 46.1 | 0.2[3] | 6.1[3] | 19.8[3] | 31.4 | 57.2 | 0.8[3] | 7.7[3] | 22.6[4] | 36.9 | 67.4 | 1.2[3] | 8.6[3] | 24.1[4] | 39.8 | 75.0 |
| | 610 | | | 8.1[2] | 17.2[3] | 37.7[3] | | | 12.6[3] | 23.6[3] | 48.3[4] | | 0.2[3] | 15.0[3] | 28.4[3] | 57.6 | | 1.0[3] | 16.4[3] | 31.1[4] | 64.7 |
| 5.20 | 305 | | 4.7[3] | 15.1[3] | 24.2[4] | 44.4 | 1.7[3] | 7.4[3] | 19.9[4] | 30.8 | 54.8 | 2.4[3] | 9.1[3] | 23.2[4] | 36.6 | 64.4 | 2.8[3] | 10.0[4] | 24.5 | 39.7 | 72.4 |
| | 406 | | 1.0[2] | 11.3[3] | 20.0[3] | 39.5[4] | | 3.3[3] | 15.7[3] | 26.2[3] | 49.5 | | 4.7[3] | 18.6[3] | 31.5[4] | 58.6 | | 5.5[3] | 19.9[3] | 34.5[4] | 66.2 |
| | 610 | | | 4.6[2] | 12.7[2] | 30.9[3] | | | 8.4[2] | 18.2[3] | 40.2[3] | | | 10.6[2] | 22.6[3] | 48.4[4] | | | 11.8[3] | 25.2[3] | 55.3[4] |
| 5.60 | 305 | | 2.7[2] | 12.1[3] | 20.3[3] | 38.4 | | 5.0[3] | 16.3[3] | 26.1[4] | 47.7 | 0.4[2] | 6.5[3] | 19.4[3] | 31.2[4] | 56.3 | 0.8[3] | 7.4[3] | 20.8[3] | 34.6 | 64.5 |
| | 406 | | | 8.3[2] | 16.1[3] | 33.3[3] | | 0.9[2] | 12.1[3] | 21.5[3] | 42.3[4] | | 1.9[2] | 14.7[3] | 26.0[3] | 50.4 | | 2.6[3] | 16.0[3] | 29.2[3] | 58.0 |
| | 610 | | | 1.6[1] | 8.7[2] | 24.7[3] | | | 4.7[2] | 13.4[2] | 32.9[3] | | | 6.6[2] | 17.0[2] | 40.0[3] | | | 7.7[2] | 19.6[3] | 46.7[3] |
| 6.00 | 305 | | 0.9[2] | 9.4[2] | 16.7[3] | 32.7[3] | | 2.9[2] | 13.1[3] | 21.8[3] | 41.1[4] | | 4.1[3] | 16.0[3] | 26.3[3] | 48.8 | | 4.9[3] | 17.3[3] | 29.5[4] | 56.4 |
| | 406 | | | 5.6[2] | 12.5[2] | 27.7[3] | | | 8.9[2] | 17.2[3] | 35.7[3] | | | 11.2[2] | 21.1[3] | 42.9[3] | | 0.1[2] | 12.4[3] | 24.0[3] | 49.8[4] |
| | 610 | | | | 5.3[1] | 19.2[2] | | | 1.6[1] | 9.3[2] | 26.4[2] | | | 3.1[1] | 12.2[2] | 32.6[3] | | | 4.0[2] | 14.4[2] | 38.5[3] |

[1] Deflection meets L/120 [3] Deflection meets L/360

[2] Deflection meets L/240 [4] Deflection meets L/600

If no note, deflection meets L/720

Bailey Metal Products, Dass Metal Products, DCM Metal Corp., EB Metal Inc., Imperial Building Products, Manugypse, Groupe UP, Trebor Building Products Ltd.

# COMBINED AXIAL AND LATERAL LOAD TABLE

Limiting Factored Axial Compressive Resistance Per Stud (kN)

## 2.00 kPa Factored Lateral Load

| Wall Height (m) | Stud Spacing (mm) | 600S162 | | | | | 600S200 | | | | | 600S250 | | | | | 600S300 | | | | |
|---|---|---|---|---|---|---|---|---|---|---|---|---|---|---|---|---|---|---|---|---|---|
| | | 230 MPa | | 345 MPa | | | 230 MPa | | 345 MPa | | | 230 MPa | | 345 MPa | | | 230 MPa | | 345 MPa | | |
| | | 33 | 43 | 54 | 68 | 97 | 33 | 43 | 54 | 68 | 97 | 33 | 43 | 54 | 68 | 97 | 33 | 43 | 54 | 68 | 97 |
| 2.40 | 305 | 11.5 | 17.7 | 32.1 | 43.9 | 69.1 | 14.0 | 23.2 | 43.4 | 59.4 | 95.6 | 15.4 | 25.4 | 44.7 | 66.2 | 112 | 16.2 | 26.1 | 46.6 | 67.3 | 120 |
| | 406 | 9.9 | 16.2 | 30.6 | 42.4 | 67.6 | 12.4 | 21.5 | 41.6 | 57.7 | 93.8 | 13.8 | 23.6 | 43.0 | 64.4 | 110 | 14.6 | 24.3 | 44.9 | 65.5 | 118 |
| | 610 | 6.8 | 13.1 | 27.7 | 39.5 | 64.6 | 9.3 | 18.0 | 38.1 | 54.2 | 90.2 | 10.5 | 20.1 | 39.6 | 60.7 | 106 | 11.2 | 20.9 | 41.6 | 62.0 | 114 |
| 2.80 | 305 | 9.6 | 15.9 | 30.2 | 42.0 | 67.1 | 12.1 | 20.9 | 40.4 | 56.1 | 91.5 | 13.4 | 23.0 | 41.9 | 62.7 | 107 | 14.1 | 23.8 | 43.8 | 63.9 | 115 |
| | 406 | 7.5 | 13.8 | 28.2 | 39.9 | 65.0 | 9.9 | 18.6 | 38.0 | 53.7 | 89.0 | 11.1 | 20.6 | 39.6 | 60.2 | 104 | 11.9 | 21.4 | 41.5 | 61.5 | 112 |
| | 610 | 3.5 | 9.7 | 24.2 | 35.9 | 60.8 | 5.8 | 14.0 | 33.4 | 49.0 | 83.9 | 6.8 | 15.9 | 35.1 | 55.2 | 98.8 | 7.5 | 16.8 | 37.0 | 56.7 | 107 |
| 3.20 | 305 | 7.5 | 13.8 | 28.0 | 39.7 | 64.7 | 9.8 | 18.2 | 36.9 | 52.1 | 86.3 | 11.0 | 20.3 | 38.6 | 58.4 | 101 | 11.7 | 21.1 | 40.5 | 59.9 | 108 |
| | 406 | 4.9 | 11.1 | 25.3 | 37.0 | 61.8 | 7.1 | 15.3 | 33.9 | 49.0 | 82.9 | 8.2 | 17.2 | 35.7 | 55.1 | 97.1 | 8.9 | 18.1 | 37.5 | 56.7 | 105 |
| | 610 | | 5.9[4] | 20.2 | 31.8 | 56.3 | 2.0[4] | 9.6 | 28.0 | 42.9 | 76.4 | 2.9[4] | 11.4 | 29.9 | 48.8 | 90.1 | 3.5 | 12.3 | 31.8 | 50.6 | 97.5 |
| 3.60 | 305 | 5.2 | 11.2 | 25.2 | 37.0 | 61.6 | 7.4 | 15.3 | 32.9 | 47.5 | 80.1 | 8.5 | 17.3 | 34.9 | 53.5 | 93.4 | 9.2 | 18.1 | 36.8 | 55.4 | 101 |
| | 406 | 2.1[3] | 8.0 | 21.9 | 33.6 | 57.9 | 4.2[4] | 11.7 | 29.2 | 43.6 | 75.8 | 5.1 | 13.6 | 31.2 | 49.5 | 88.9 | 5.7 | 14.5 | 33.1 | 51.5 | 96.3 |
| | 610 | | 2.0[3] | 15.8[4] | 27.1 | 50.9 | | 5.1[3] | 22.3[4] | 36.3 | 67.8 | | 6.7[4] | 24.3 | 41.8 | 80.2 | | 7.6[4] | 26.2 | 43.9 | 87.5 |
| 4.00 | 305 | 2.9[3] | 8.6[4] | 21.8 | 33.2 | 58.0 | 4.9[4] | 12.2 | 28.6 | 42.3 | 72.9 | 5.8[4] | 14.1 | 30.8 | 48.2 | 85.2 | 6.5 | 15.0 | 32.7 | 50.5 | 92.7 |
| | 406 | | 4.9[3] | 18.0[4] | 29.2 | 53.4 | 1.3[3] | 8.1[4] | 24.3 | 37.8 | 67.9 | 2.0[3] | 9.8[4] | 26.5 | 43.4 | 79.7 | 2.6[3] | 10.7 | 28.4 | 45.8 | 87.1 |
| | 610 | | | 11.0[3] | 21.7[3] | 44.9 | | 0.7[3] | 16.5[3] | 29.5[4] | 58.6 | | 2.0[3] | 18.7[3] | 34.5 | 69.6 | | 2.9[3] | 20.4[4] | 37.0 | 76.8 |
| 4.40 | 305 | 0.6[3] | 5.9[3] | 18.2[4] | 28.8 | 52.8 | 2.5[3] | 9.1[4] | 24.1 | 36.8 | 65.1 | 3.2[3] | 10.9[4] | 26.7 | 42.5 | 76.4 | 3.8[3] | 11.7 | 28.4 | 45.3 | 83.9 |
| | 406 | | 1.9[3] | 14.0[3] | 24.3[4] | 47.5 | | 4.6[3] | 19.4[3] | 31.8[4] | 59.5 | | 6.1[3] | 21.9[4] | 37.2 | 70.2 | | 7.0[3] | 23.6[4] | 39.9 | 77.6 |
| | 610 | | | 6.5[2] | 16.1[3] | 37.9[3] | | | 11.1[3] | 22.9[3] | 49.2[4] | | | 13.2[3] | 27.4[3] | 59.0 | | | 14.8[3] | 30.0[3] | 65.9 |
| 4.80 | 305 | | 3.3[3] | 14.6[3] | 24.3[4] | 46.1 | 0.2[3] | 6.1[3] | 19.8[3] | 31.4 | 57.2 | 0.8[3] | 7.7[3] | 22.6[4] | 36.9 | 67.4 | 1.2[3] | 8.6[3] | 24.1[4] | 39.8 | 75.0 |
| | 406 | | | 10.2[3] | 19.5[3] | 40.4[4] | | 1.4[3] | 14.9[3] | 26.1[3] | 51.1 | | 2.6[3] | 17.4[3] | 31.1[4] | 60.7 | | 3.4[3] | 18.9[3] | 33.9[4] | 68.0 |
| | 610 | | | 2.4[2] | 11.0[2] | 30.3[3] | | | 6.2[2] | 16.7[3] | 40.3[3] | | | 8.2[2] | 20.8[3] | 48.8[3] | | | 9.4[2] | 23.3[3] | 55.4[4] |
| 5.20 | 305 | | 1.0[2] | 11.3[3] | 20.0[3] | 39.5[4] | | 3.3[3] | 15.7[3] | 26.2[3] | 49.5 | | 4.7[3] | 18.6[3] | 31.5[4] | 58.6 | | 5.5[3] | 19.9[3] | 34.5[4] | 66.2 |
| | 406 | | | 6.7[2] | 15.0[3] | 33.6[3] | | | 10.7[2] | 20.8[3] | 43.2[3] | | | 13.2[3] | 25.4[3] | 51.7[4] | | | 14.4[3] | 28.1[3] | 58.8 |
| | 610 | | | | 6.4[2] | 23.3[2] | | | 2.0[1] | 11.2[2] | 32.1[3] | | | 3.6[2] | 14.7[2] | 39.4[3] | | | 4.6[2] | 17.0[2] | 45.7[3] |
| 5.60 | 305 | | | 8.3[2] | 16.1[3] | 33.3[3] | | 0.9[2] | 12.1[3] | 21.5[3] | 42.3[4] | | 1.9[2] | 14.7[3] | 26.0[3] | 50.4 | | 2.6[3] | 16.0[3] | 29.2[3] | 58.0 |
| | 406 | | | 3.7[2] | 11.0[2] | 27.4[3] | | | 7.1[2] | 16.0[2] | 35.9[3] | | | 9.1[2] | 19.9[3] | 43.3[3] | | | 10.3[2] | 22.6[3] | 50.3[4] |
| | 610 | | | | 2.4[1] | 17.1[2] | | | | 6.5[1] | 24.8[2] | | | | 9.2[2] | 31.0[3] | | | 0.4[1] | 11.2[2] | 36.8[3] |
| 6.00 | 305 | | | 5.6[2] | 12.5[2] | 27.7[3] | | | 8.9[2] | 17.2[3] | 35.7[3] | | | 11.2[2] | 21.1[3] | 42.9[3] | | 0.1[2] | 12.4[3] | 24.0[3] | 49.8[4] |
| | 406 | | | 1.1[1] | 7.6[2] | 21.9[2] | | | 3.9[1] | 11.8[2] | 29.3[3] | | | 5.6[2] | 15.0[2] | 35.8[3] | | | 6.7[2] | 17.4[2] | 42.1[3] |
| | 610 | | | | | 11.8[1] | | | | 2.4[1] | 18.4[2] | | | | 4.5[1] | 23.7[2] | | | | 6.1[1] | 28.7[2] |

[1] Deflection meets L/120 [3] Deflection meets L/360

[2] Deflection meets L/240 [4] Deflection meets L/600

If no note, deflection meets L/720

Bailey Metal Products, Dass Metal Products, DCM Metal Corp., EB Metal Inc., Imperial Building Products, Manugypse, Groupe UP, Trebor Building Products Ltd.

# COMBINED AXIAL AND LATERAL LOAD TABLE

Limiting Factored Axial Compressive Resistance Per Stud (kN)

## 2.50 kPa Factored Lateral Load

| Wall Height (m) | Stud Spacing (mm) | 600S162 | | | | | 600S200 | | | | | 600S250 | | | | | 600S300 | | | | |
|---|---|---|---|---|---|---|---|---|---|---|---|---|---|---|---|---|---|---|---|---|---|
| | | 230 MPa | | 345 MPa | | | 230 MPa | | 345 MPa | | | 230 MPa | | 345 MPa | | | 230 MPa | | 345 MPa | | |
| | | 33 | 43 | 54 | 68 | 97 | 33 | 43 | 54 | 68 | 97 | 33 | 43 | 54 | 68 | 97 | 33 | 43 | 54 | 68 | 97 |
| 2.40 | 305 | 10.3 | 16.6 | 31.0 | 42.8 | 67.9 | 12.8 | 21.9 | 42.1 | 58.1 | 94.2 | 14.2 | 24.0 | 43.4 | 64.8 | 111 | 15.0 | 24.7 | 45.4 | 66.0 | 119 |
| | 406 | 8.3 | 14.6 | 29.1 | 40.9 | 66.1 | 10.8 | 19.7 | 39.9 | 55.9 | 92.0 | 12.1 | 21.8 | 41.3 | 62.5 | 108 | 12.9 | 22.6 | 43.2 | 63.7 | 116 |
| | 610 | 4.5 | 10.9 | 25.5 | 37.3 | 62.4 | 6.9 | 15.5 | 35.6 | 51.6 | 87.5 | 8.0 | 17.5 | 37.2 | 58.0 | 103 | 8.8 | 18.3 | 39.1 | 59.4 | 111 |
| 2.80 | 305 | 8.0 | 14.3 | 28.7 | 40.5 | 65.5 | 10.4 | 19.1 | 38.6 | 54.3 | 89.6 | 11.7 | 21.2 | 40.2 | 60.8 | 105 | 12.4 | 22.0 | 42.1 | 62.1 | 113 |
| | 406 | 5.5 | 11.7 | 26.2 | 37.9 | 62.9 | 7.8 | 16.3 | 35.7 | 51.3 | 86.4 | 8.9 | 18.3 | 37.3 | 57.6 | 102 | 9.7 | 19.1 | 39.2 | 59.1 | 109 |
| | 610 | 0.5[4] | 6.7 | 21.3 | 33.0 | 57.8 | 2.8 | 10.7 | 30.0 | 45.5 | 80.3 | 3.7 | 12.5 | 31.8 | 51.5 | 94.8 | 4.3 | 13.4 | 33.7 | 53.2 | 102 |
| 3.20 | 305 | 5.5 | 11.7 | 26.0 | 37.7 | 62.5 | 7.8 | 16.0 | 34.6 | 49.8 | 83.8 | 8.9 | 18.0 | 36.4 | 55.9 | 98.0 | 9.6 | 18.8 | 38.3 | 57.5 | 106 |
| | 406 | 2.3[4] | 8.5 | 22.7 | 34.3 | 59.0 | 4.5 | 12.4 | 30.9 | 45.9 | 79.6 | 5.5 | 14.3 | 32.7 | 51.9 | 93.6 | 6.1 | 15.1 | 34.6 | 53.6 | 101 |
| | 610 | | 2.3[3] | 16.6[4] | 28.0 | 52.3 | | 5.6[4] | 23.8 | 38.6 | 71.7 | | 7.2 | 25.8 | 44.2 | 84.9 | | 8.1 | 27.6 | 46.1 | 92.3 |
| 3.60 | 305 | 2.9[4] | 8.8 | 22.7 | 34.4 | 58.9 | 5.0[4] | 12.6 | 30.1 | 44.5 | 76.9 | 5.9 | 14.5 | 32.1 | 50.5 | 90.0 | 6.6 | 15.4 | 34.0 | 52.5 | 97.4 |
| | 406 | | 4.9[3] | 18.8 | 30.2 | 54.4 | 1.2[3] | 8.3[4] | 25.6 | 39.9 | 71.8 | 1.9[3] | 10.1 | 27.7 | 45.6 | 84.4 | 2.5[4] | 11.0 | 29.6 | 47.7 | 91.8 |
| | 610 | | | 11.4[3] | 22.5[4] | 45.9 | | 0.5[3] | 17.4[3] | 31.2[4] | 62.2 | | 1.8[3] | 19.5[4] | 36.3 | 74.0 | | 2.7[3] | 21.2[4] | 38.6 | 81.2 |
| 4.00 | 305 | 0.2[3] | 5.8[3] | 18.9[4] | 30.1 | 54.5 | 2.2[3] | 9.1[4] | 25.3 | 38.9 | 69.1 | 3.0[3] | 10.9 | 27.6 | 44.5 | 81.1 | 3.5[4] | 11.8 | 29.4 | 47.0 | 88.5 |
| | 406 | | 1.4[3] | 14.4[3] | 25.3[4] | 49.1 | | 4.3[3] | 20.3[4] | 33.5 | 63.1 | | 5.8[3] | 22.5[4] | 38.9 | 74.6 | | 6.7[4] | 24.3 | 41.3 | 81.9 |
| | 610 | | | 6.2[2] | 16.5[3] | 39.1[3] | | | 11.2[3] | 23.8[3] | 52.1[4] | | | 13.2[3] | 28.4[3] | 62.6 | | | 14.8[3] | 30.8[4] | 69.5 |
| 4.40 | 305 | | 2.8[3] | 15.0[3] | 25.4[4] | 48.7 | | 5.7[3] | 20.6[4] | 33.0 | 60.9 | 0.1[3] | 7.3[3] | 23.1[4] | 38.5 | 71.7 | 0.5[3] | 8.1[4] | 24.7 | 41.2 | 79.1 |
| | 406 | | | 10.1[3] | 20.1[3] | 42.5[4] | | 0.5[3] | 15.1[3] | 27.2[3] | 54.2 | | 1.7[3] | 17.4[3] | 32.1[4] | 64.4 | | 2.5[3] | 19.0[3] | 34.8[4] | 71.6 |
| | 610 | | | 1.4[2] | 10.6[2] | 31.4[3] | | | 5.5[2] | 16.8[3] | 42.3[3] | | | 7.3[2] | 20.8[3] | 51.3[4] | | | 8.7[3] | 23.2[3] | 57.9[4] |
| 4.80 | 305 | | 0.1[2] | 11.3[3] | 20.7[3] | 41.7[4] | | 2.5[3] | 16.0[3] | 27.4[3] | 52.6 | | 3.8[3] | 18.7[3] | 32.5[4] | 62.3 | | 4.6[3] | 20.1[3] | 35.3 | 69.7 |
| | 406 | | | 6.1[2] | 15.1[3] | 35.1[3] | | | 10.4[2] | 21.2[3] | 45.5[4] | | | 12.6[3] | 25.7[3] | 54.6[4] | | | 14.0[3] | 28.4[3] | 61.5 |
| | 610 | | | | 5.3[2] | 23.5[2] | | | 0.4[1] | 10.4[2] | 33.0[3] | | | 2.0[2] | 13.8[2] | 40.8[3] | | | 3.1[2] | 16.1[3] | 47.0[3] |
| 5.20 | 305 | | | 7.8[2] | 16.2[3] | 35.0[3] | | | 11.9[3] | 22.1[3] | 44.7[4] | | 0.7[2] | 14.5[3] | 26.9[3] | 53.3 | | 1.4[3] | 15.7[3] | 29.7[3] | 60.6 |
| | 406 | | | 2.6[2] | 10.5[2] | 28.2[3] | | | 6.2[2] | 15.8[2] | 37.4[3] | | | 8.2[2] | 19.8[3] | 45.3[3] | | | 9.3[2] | 22.4[3] | 52.0[4] |
| | 610 | | | | 0.6[1] | 16.5[2] | | | | 4.9[1] | 24.7[2] | | | | 7.6[2] | 31.3[3] | | | | 9.6[2] | 36.9[3] |
| 5.60 | 305 | | | 4.8[2] | 12.2[2] | 28.8[3] | | | 8.3[2] | 17.3[3] | 37.4[3] | | | 10.5[2] | 21.3[3] | 45.0[3] | | | 11.7[2] | 24.2[3] | 52.1[4] |
| | 406 | | | | 6.5[1] | 22.0[2] | | | 2.5[1] | 11.0[2] | 30.1[3] | | | 4.1[2] | 14.3[2] | 36.9[3] | | | 5.1[2] | 16.7[2] | 43.3[3] |
| | 610 | | | | | 10.4[1] | | | | 0.2[1] | 17.5[2] | | | | 2.1[1] | 23.0[2] | | | | 3.7[1] | 28.0[2] |
| 6.00 | 305 | | | 2.2[1] | 8.7[2] | 23.3[2] | | | 5.1[2] | 13.1[2] | 30.9[3] | | | 7.0[2] | 16.4[2] | 37.5[3] | | | 8.0[2] | 19.0[3] | 43.9[3] |
| | 406 | | | | 3.1[1] | 16.6[2] | | | | 6.9[1] | 23.6[2] | | | 0.6[1] | 9.5[2] | 29.5[2] | | | 1.5[1] | 11.5[2] | 35.1[3] |
| | 610 | | | | | 5.3[1] | | | | | 11.3[1] | | | | | 15.8[1] | | | | | 20.0[2] |

[1] Deflection meets L/120 [3] Deflection meets L/360

[2] Deflection meets L/240 [4] Deflection meets L/600

If no note, deflection meets L/720

Bailey Metal Products, Dass Metal Products, DCM Metal Corp., EB Metal Inc., Imperial Building Products, Manugypse, Groupe UP, Trebor Building Products Ltd.

# COMBINED AXIAL AND LATERAL LOAD TABLE

Limiting Factored Axial Compressive Resistance Per Stud (kN)

## 3.00 kPa Factored Lateral Load

| Wall Height (m) | Stud Spacing (mm) | 600S162 | | | | | 600S200 | | | | | 600S250 | | | | | 600S300 | | | | |
|---|---|---|---|---|---|---|---|---|---|---|---|---|---|---|---|---|---|---|---|---|---|
| | | 230 MPa | | 345 MPa | | | 230 MPa | | 345 MPa | | | 230 MPa | | 345 MPa | | | 230 MPa | | 345 MPa | | |
| | | 33 | 43 | 54 | 68 | 97 | 33 | 43 | 54 | 68 | 97 | 33 | 43 | 54 | 68 | 97 | 33 | 43 | 54 | 68 | 97 |
| 2.40 | 305 | 9.1 | 15.4 | 29.9 | 41.7 | 66.8 | 11.6 | 20.6 | 40.8 | 56.8 | 92.9 | 12.9 | 22.7 | 42.2 | 63.5 | 109 | 13.7 | 23.4 | 44.1 | 64.6 | 117 |
| | 406 | 6.8 | 13.1 | 27.7 | 39.5 | 64.6 | 9.3 | 18.0 | 38.1 | 54.2 | 90.2 | 10.5 | 20.1 | 39.6 | 60.7 | 106 | 11.2 | 20.9 | 41.6 | 62.0 | 114 |
| | 610 | 2.3 | 8.6 | 23.4 | 35.2 | 60.2 | 4.6 | 13.0 | 33.0 | 49.0 | 84.8 | 5.7 | 14.9 | 34.7 | 55.3 | 100 | 6.3 | 15.8 | 36.6 | 56.8 | 108 |
| 2.80 | 305 | 6.5 | 12.8 | 27.2 | 38.9 | 63.9 | 8.9 | 17.4 | 36.9 | 52.5 | 87.7 | 10.0 | 19.4 | 38.5 | 58.9 | 103 | 10.8 | 20.2 | 40.4 | 60.3 | 111 |
| | 406 | 3.5 | 9.7 | 24.2 | 35.9 | 60.8 | 5.8 | 14.0 | 33.4 | 49.0 | 83.9 | 6.8 | 15.9 | 35.1 | 55.2 | 98.8 | 7.5 | 16.8 | 37.0 | 56.7 | 107 |
| | 610 | | 3.9[4] | 18.5 | 30.1 | 54.7 | | 7.5 | 26.7 | 42.1 | 76.6 | 0.6[4] | 9.2 | 28.5 | 48.0 | 90.9 | 1.2 | 10.1 | 30.4 | 49.7 | 98.4 |
| 3.20 | 305 | 3.6 | 9.8 | 24.0 | 35.7 | 60.4 | 5.8 | 13.8 | 32.4 | 47.5 | 81.3 | 6.8 | 15.8 | 34.2 | 53.5 | 95.3 | 7.5 | 16.6 | 36.1 | 55.2 | 103 |
| | 406 | | 5.9[4] | 20.2 | 31.8 | 56.3 | 2.0[4] | 9.6 | 28.0 | 42.9 | 76.4 | 2.9[4] | 11.4 | 29.9 | 48.8 | 90.1 | 3.5 | 12.3 | 31.8 | 50.6 | 97.5 |
| | 610 | | | 13.0[3] | 24.3[4] | 48.4 | | 1.8[3] | 19.8[4] | 34.4 | 67.1 | | 3.2[4] | 21.8 | 39.8 | 79.9 | | 4.1[4] | 23.6 | 41.8 | 87.3 |
| 3.60 | 305 | 0.6[3] | 6.4[4] | 20.3 | 31.9 | 56.1 | 2.7[3] | 10.0 | 27.4 | 41.7 | 73.8 | 3.5[4] | 11.8 | 29.5 | 47.5 | 86.6 | 4.1[4] | 12.7 | 31.3 | 49.6 | 94.1 |
| | 406 | | 2.0[3] | 15.8[4] | 27.1 | 50.9 | | 5.1[3] | 22.3[4] | 36.3 | 67.8 | | 6.7[4] | 24.3 | 41.8 | 80.2 | | 7.6[4] | 26.2 | 43.9 | 87.5 |
| | 610 | | | 7.3[3] | 18.2[3] | 41.2[4] | | | 12.8[3] | 26.3[3] | 56.7 | | | 14.8[3] | 31.1[4] | 68.0 | | | 16.5[3] | 33.4[4] | 75.1 |
| 4.00 | 305 | | 3.1[3] | 16.2[3] | 27.2 | 51.2 | | 6.2[3] | 22.3[4] | 35.6 | 65.5 | 0.2[3] | 7.8[4] | 24.5 | 41.1 | 77.1 | 0.7[3] | 8.7[4] | 26.3 | 43.5 | 84.5 |
| | 406 | | | 11.0[3] | 21.7[3] | 44.9 | | 0.7[3] | 16.5[3] | 29.5[4] | 58.6 | | 2.0[3] | 18.7[3] | 34.5 | 69.6 | | 2.9[3] | 20.4[4] | 37.0 | 76.8 |
| | 610 | | | 1.7[2] | 11.7[3] | 33.5[3] | | | 6.2[2] | 18.4[3] | 46.1[3] | | | 8.1[3] | 22.6[3] | 55.9[4] | | | 9.6[3] | 25.0[3] | 62.6 |
| 4.40 | 305 | | | 12.0[3] | 22.1[3] | 44.9 | | 2.5[3] | 17.2[3] | 29.5[4] | 56.8 | | 3.9[3] | 19.6[3] | 34.6 | 67.3 | | 4.7[3] | 21.3[4] | 37.3 | 74.5 |
| | 406 | | | 6.5[2] | 16.1[3] | 37.9[3] | | | 11.1[3] | 22.9[3] | 49.2[4] | | | 13.2[3] | 27.4[3] | 59.0 | | | 14.8[3] | 30.0[3] | 65.9 |
| | 610 | | | | 5.5[2] | 25.4[3] | | | 0.2[2] | 11.1[2] | 35.8[3] | | | 1.9[2] | 14.6[3] | 44.2[3] | | | 3.1[2] | 16.9[3] | 50.4[3] |
| 4.80 | 305 | | | 8.1[2] | 17.2[3] | 37.7[3] | | | 12.6[3] | 23.6[3] | 48.3[4] | | 0.2[3] | 15.0[3] | 28.4[3] | 57.6 | | 1.0[3] | 16.4[3] | 31.1[4] | 64.7 |
| | 406 | | | 2.4[2] | 11.0[2] | 30.3[3] | | | 6.2[2] | 16.7[3] | 40.3[3] | | | 8.2[2] | 20.8[3] | 48.8[3] | | | 9.4[2] | 23.3[3] | 55.4[4] |
| | 610 | | | | | 17.3[2] | | | | 4.6[2] | 26.3[2] | | | | 7.4[2] | 33.4[3] | | | | 9.4[2] | 39.1[3] |
| 5.20 | 305 | | | 4.6[2] | 12.7[2] | 30.9[3] | | | 8.4[2] | 18.2[3] | 40.2[3] | | | 10.6[2] | 22.6[3] | 48.4[4] | | | 11.8[3] | 25.2[3] | 55.3[4] |
| | 406 | | | | 6.4[2] | 23.3[2] | | | 2.0[1] | 11.2[2] | 32.1[3] | | | 3.6[2] | 14.7[2] | 39.4[3] | | | 4.6[2] | 17.0[2] | 45.7[3] |
| | 610 | | | | | 10.3[1] | | | | | 18.0[2] | | | | 1.1[1] | 23.9[2] | | | | 2.7[1] | 28.9[2] |
| 5.60 | 305 | | | 1.6[1] | 8.7[2] | 24.7[3] | | | 4.7[2] | 13.4[2] | 32.9[3] | | | 6.6[2] | 17.0[2] | 40.0[3] | | | 7.7[2] | 19.6[3] | 46.7[3] |
| | 406 | | | | 2.4[1] | 17.1[2] | | | | 6.5[1] | 24.8[2] | | | | 9.2[2] | 31.0[3] | | | 0.4[1] | 11.2[2] | 36.8[3] |
| | 610 | | | | | 4.3[1] | | | | | 10.8[1] | | | | | 15.6[2] | | | | | 19.9[2] |
| 6.00 | 305 | | | | 5.3[1] | 19.2[2] | | | 1.6[1] | 9.3[2] | 26.4[2] | | | 3.1[1] | 12.2[2] | 32.6[3] | | | 4.0[2] | 14.4[2] | 38.5[3] |
| | 406 | | | | | 11.8[1] | | | | 2.4[1] | 18.4[2] | | | | 4.5[1] | 23.7[2] | | | | 6.1[1] | 28.7[2] |
| | 610 | | | | | | | | | | 4.8[1] | | | | | 8.6[1] | | | | | 12.0[1] |

[1] Deflection meets L/120 [3] Deflection meets L/360

[2] Deflection meets L/240 [4] Deflection meets L/600

If no note, deflection meets L/720

Bailey Metal Products, Dass Metal Products, DCM Metal Corp., EB Métal Inc., Imperial Building Products, Manugypse, Groupe UP, Trebor Building Products Ltd.

# COMBINED AXIAL AND LATERAL LOAD TABLE

Limiting Factored Axial Compressive Resistance Per Stud (kN)

## 3.50 kPa Factored Lateral Load

| Wall Height (m) | Stud Spacing (mm) | 600S162 | | | | | 600S200 | | | | | 600S250 | | | | | 600S300 | | | | |
|---|---|---|---|---|---|---|---|---|---|---|---|---|---|---|---|---|---|---|---|---|---|
| | | 230 MPa | | 345 MPa | | | 230 MPa | | 345 MPa | | | 230 MPa | | 345 MPa | | | 230 MPa | | 345 MPa | | |
| | | 33 | 43 | 54 | 68 | 97 | 33 | 43 | 54 | 68 | 97 | 33 | 43 | 54 | 68 | 97 | 33 | 43 | 54 | 68 | 97 |
| 2.40 | 305 | 7.9 | 14.3 | 28.8 | 40.6 | 65.7 | 10.4 | 19.3 | 39.4 | 55.5 | 91.5 | 11.7 | 21.4 | 40.9 | 62.1 | 108 | 12.5 | 22.1 | 42.8 | 63.3 | 116 |
| | 406 | 5.3 | 11.6 | 26.2 | 38.0 | 63.1 | 7.7 | 16.4 | 36.4 | 52.4 | 88.4 | 8.9 | 18.3 | 38.0 | 58.9 | 104 | 9.6 | 19.1 | 39.9 | 60.2 | 112 |
| | 610 | 0.1 | 6.5 | 21.2 | 33.0 | 58.0 | 2.4 | 10.6 | 30.5 | 46.5 | 82.1 | 3.3 | 12.4 | 32.3 | 52.7 | 97.4 | 3.9 | 13.3 | 34.2 | 54.2 | 105 |
| 2.80 | 305 | 5.0 | 11.2 | 25.7 | 37.4 | 62.4 | 7.3 | 15.7 | 35.1 | 50.7 | 85.8 | 8.4 | 17.7 | 36.8 | 57.0 | 101 | 9.1 | 18.5 | 38.7 | 58.5 | 109 |
| | 406 | 1.5[4] | 7.7 | 22.3 | 34.0 | 58.8 | 3.7 | 11.8 | 31.1 | 46.7 | 81.5 | 4.7 | 13.7 | 32.9 | 52.8 | 96.1 | 5.3 | 14.5 | 34.8 | 54.3 | 104 |
| | 610 | | 1.1[3] | 15.7 | 27.3 | 51.8 | | 4.4[4] | 23.4 | 38.8 | 73.1 | | 6.0 | 25.4 | 44.5 | 87.0 | | 6.9 | 27.2 | 46.3 | 94.5 |
| 3.20 | 305 | 1.7[4] | 7.8 | 22.1 | 33.7 | 58.3 | 3.9[4] | 11.7 | 30.1 | 45.2 | 78.8 | 4.8 | 13.6 | 32.0 | 51.1 | 92.7 | 5.5 | 14.4 | 33.9 | 52.8 | 100 |
| | 406 | | 3.5[4] | 17.8 | 29.2 | 53.6 | | 6.9[4] | 25.2 | 40.0 | 73.3 | 0.3[3] | 8.6 | 27.1 | 45.7 | 86.6 | 0.8[4] | 9.5 | 29.0 | 47.6 | 94.0 |
| | 610 | | | 9.6[3] | 20.8[4] | 44.6 | | | 15.9[3] | 30.3[4] | 62.7 | | | 17.9[4] | 35.5 | 75.1 | | 0.2[3] | 19.7[4] | 37.5 | 82.3 |
| 3.60 | 305 | | 4.2[3] | 18.0[4] | 29.4 | 53.5 | 0.4[3] | 7.5[4] | 24.8 | 39.0 | 70.8 | 1.2[3] | 9.2 | 26.9 | 44.6 | 83.4 | 1.7[3] | 10.1 | 28.7 | 46.7 | 90.7 |
| | 406 | | | 12.8[3] | 24.0[4] | 47.6 | | 2.0[3] | 19.0[4] | 32.9 | 64.0 | | 3.4[3] | 21.1[4] | 38.1 | 76.0 | | 4.3[4] | 22.9[4] | 40.3 | 83.3 |
| | 610 | | | 3.4[2] | 14.0[3] | 36.6[3] | | | 8.4[3] | 21.7[3] | 51.5[4] | | | 10.4[3] | 26.2[3] | 62.3 | | | 12.0[3] | 28.4[4] | 69.2 |
| 4.00 | 305 | | 0.6[3] | 13.5[3] | 24.4[4] | 48.0 | | 3.4[3] | 19.3[3] | 32.5 | 62.0 | | 4.9[3] | 21.5[4] | 37.8 | 73.3 | | 5.7[3] | 23.3[4] | 40.2 | 80.6 |
| | 406 | | | 7.8[3] | 18.2[3] | 41.0[4] | | | 12.9[3] | 25.7[3] | 54.3 | | | 15.0[3] | 30.4[4] | 64.9 | | | 16.7[3] | 32.9[4] | 71.9 |
| | 610 | | | | 7.1[2] | 28.3[3] | | | 1.4[2] | 13.3[3] | 40.3[3] | | | 3.2[2] | 17.1[3] | 49.6[3] | | | 4.5[2] | 19.4[3] | 56.0[4] |
| 4.40 | 305 | | | 9.2[3] | 19.1[3] | 41.3[4] | | | 14.1[3] | 26.1[3] | 52.9 | | 0.7[3] | 16.4[3] | 30.9[4] | 63.0 | | 1.5[3] | 17.9[3] | 33.6[4] | 70.2 |
| | 406 | | | 3.1[2] | 12.4[2] | 33.5[3] | | | 7.3[2] | 18.7[3] | 44.5[3] | | | 9.3[3] | 23.0[3] | 53.8[4] | | | 10.7[3] | 25.4[3] | 60.5 |
| | 610 | | | | 0.7[1] | 19.7[2] | | | | 5.8[2] | 29.6[3] | | | | 8.8[2] | 37.5[3] | | | | 10.9[2] | 43.3[3] |
| 4.80 | 305 | | | 5.2[2] | 14.0[3] | 33.9[3] | | | 9.3[2] | 20.1[3] | 44.2[3] | | | 11.5[3] | 24.5[3] | 53.1[4] | | | 12.8[3] | 27.1[3] | 60.0 |
| | 406 | | | | 7.1[2] | 25.7[3] | | | 2.3[2] | 12.5[2] | 35.4[3] | | | 4.0[2] | 16.1[2] | 43.4[3] | | | 5.2[2] | 18.4[3] | 49.7[3] |
| | 610 | | | | | 11.5[2] | | | | | 20.1[2] | | | | 1.4[1] | 26.5[2] | | | | 3.2[2] | 31.7[3] |
| 5.20 | 305 | | | 1.7[1] | 9.5[2] | 27.0[3] | | | 5.1[2] | 14.6[2] | 36.0[3] | | | 7.0[2] | 18.5[3] | 43.8[3] | | | 8.1[2] | 21.0[3] | 50.4[3] |
| | 406 | | | | 2.5[1] | 18.7[2] | | | | 6.9[2] | 27.1[2] | | | | 9.9[2] | 33.9[3] | | | 0.2[1] | 12.0[2] | 39.8[3] |
| | 610 | | | | | 4.5[1] | | | | | 11.7[1] | | | | | 16.9[2] | | | | | 21.4[2] |
| 5.60 | 305 | | | | 5.5[1] | 20.8[2] | | | 1.5[1] | 9.8[2] | 28.7[3] | | | 2.9[1] | 13.0[2] | 35.4[3] | | | 3.9[2] | 15.3[2] | 41.6[3] |
| | 406 | | | | | 12.6[1] | | | | 2.2[1] | 19.8[2] | | | | 4.4[1] | 25.6[2] | | | | 6.2[2] | 30.9[2] |
| | 610 | | | | | | | | | | 4.7[1] | | | | | 8.8[1] | | | | | 12.4[1] |
| 6.00 | 305 | | | | 2.1[1] | 15.4[2] | | | | 5.7[1] | 22.3[2] | | | | 8.2[2] | 28.0[2] | | | 0.2[1] | 10.1[2] | 33.4[3] |
| | 406 | | | | | 7.4[1] | | | | | 13.6[1] | | | | | 18.4[2] | | | | 1.1[1] | 22.8[2] |
| | 610 | | | | | | | | | | | | | | | 1.9[1] | | | | | 4.7[1] |

[1] Deflection meets L/120 [3] Deflection meets L/360

[2] Deflection meets L/240 [4] Deflection meets L/600

If no note, deflection meets L/720

Bailey Metal Products, Dass Metal Products, DCM Metal Corp., EB Metal Inc., Imperial Building Products, Manugypse, Groupe UP, Trebor Building Products Ltd.

# COMBINED AXIAL AND LATERAL LOAD TABLE

Limiting Factored Axial Compressive Resistance Per Stud (kN)

## 0 kPa Factored Lateral Load

| Wall Height (m) | Stud Spacing (mm) | 800S162 | | | | 800S200 | | | | 800S250 | | | | 800S300 | | | |
|---|---|---|---|---|---|---|---|---|---|---|---|---|---|---|---|---|---|
| | | 230 MPa | 345 MPa | | | 230 MPa | 345 MPa | | | 230 MPa | 345 MPa | | | 230 MPa | 345 MPa | | |
| | | 43 | 54 | 68 | 97 | 43 | 54 | 68 | 97 | 43 | 54 | 68 | 97 | 43 | 54 | 68 | 97 |
| 2.40 | 305 | 22.1 | 35.3 | 46.9 | 72.6 | 29.3 | 50.3 | 66.5 | 103 | 32.1 | 53.0 | 76.3 | 127 | 32.8 | 55.2 | 78.0 | 139 |
| | 406 | 22.1 | 35.3 | 46.9 | 72.6 | 29.3 | 50.3 | 66.5 | 103 | 32.1 | 53.0 | 76.3 | 127 | 32.8 | 55.2 | 78.0 | 139 |
| | 610 | 22.1 | 35.3 | 46.9 | 72.6 | 29.3 | 50.3 | 66.5 | 103 | 32.1 | 53.0 | 76.3 | 127 | 32.8 | 55.2 | 78.0 | 139 |
| 2.80 | 305 | 22.1 | 35.3 | 46.9 | 72.6 | 29.3 | 50.3 | 66.5 | 103 | 32.0 | 52.7 | 75.9 | 127 | 32.6 | 54.8 | 77.4 | 138 |
| | 406 | 22.1 | 35.3 | 46.9 | 72.6 | 29.3 | 50.3 | 66.5 | 103 | 32.0 | 52.7 | 75.9 | 127 | 32.6 | 54.8 | 77.4 | 138 |
| | 610 | 22.1 | 35.3 | 46.9 | 72.6 | 29.3 | 50.3 | 66.5 | 103 | 32.0 | 52.7 | 75.9 | 127 | 32.6 | 54.8 | 77.4 | 138 |
| 3.20 | 305 | 22.1 | 35.3 | 46.9 | 72.6 | 29.3 | 50.3 | 66.5 | 103 | 31.8 | 52.3 | 75.4 | 126 | 32.4 | 54.3 | 76.6 | 136 |
| | 406 | 22.1 | 35.3 | 46.9 | 72.6 | 29.3 | 50.3 | 66.5 | 103 | 31.8 | 52.3 | 75.4 | 126 | 32.4 | 54.3 | 76.6 | 136 |
| | 610 | 22.1 | 35.3 | 46.9 | 72.6 | 29.3 | 50.3 | 66.5 | 103 | 31.8 | 52.3 | 75.4 | 126 | 32.4 | 54.3 | 76.6 | 136 |
| 3.60 | 305 | 22.1 | 35.3 | 46.9 | 72.6 | 29.3 | 50.3 | 66.5 | 103 | 31.6 | 51.7 | 74.7 | 124 | 32.2 | 53.6 | 75.7 | 134 |
| | 406 | 22.1 | 35.3 | 46.9 | 72.6 | 29.3 | 50.3 | 66.5 | 103 | 31.6 | 51.7 | 74.7 | 124 | 32.2 | 53.6 | 75.7 | 134 |
| | 610 | 22.1 | 35.3 | 46.9 | 72.6 | 29.3 | 50.3 | 66.5 | 103 | 31.6 | 51.7 | 74.7 | 124 | 32.2 | 53.6 | 75.7 | 134 |
| 4.00 | 305 | 22.1 | 35.3 | 46.9 | 72.6 | 29.2 | 50.1 | 66.5 | 103 | 31.3 | 51.0 | 73.8 | 123 | 31.9 | 52.8 | 74.5 | 131 |
| | 406 | 22.1 | 35.3 | 46.9 | 72.6 | 29.2 | 50.1 | 66.5 | 103 | 31.3 | 51.0 | 73.8 | 123 | 31.9 | 52.8 | 74.5 | 131 |
| | 610 | 22.1 | 35.3 | 46.9 | 72.6 | 29.2 | 50.1 | 66.5 | 103 | 31.3 | 51.0 | 73.8 | 123 | 31.9 | 52.8 | 74.5 | 131 |
| 4.40 | 305 | 22.1 | 35.3 | 46.9 | 72.6 | 28.8 | 49.2 | 65.5 | 103 | 31.0 | 50.1 | 72.3 | 120 | 31.5 | 51.9 | 73.0 | 128 |
| | 406 | 22.1 | 35.3 | 46.9 | 72.6 | 28.8 | 49.2 | 65.5 | 103 | 31.0 | 50.1 | 72.3 | 120 | 31.5 | 51.9 | 73.0 | 128 |
| | 610 | 22.1 | 35.3 | 46.9 | 72.6 | 28.8 | 49.2 | 65.5 | 103 | 31.0 | 50.1 | 72.3 | 120 | 31.5 | 51.9 | 73.0 | 127 |
| 4.80 | 305 | 22.1 | 35.3 | 46.9 | 72.6 | 28.3 | 47.9 | 63.9 | 101 | 30.5 | 49.0 | 70.4 | 116 | 31.1 | 50.8 | 71.4 | 124 |
| | 406 | 22.1 | 35.3 | 46.9 | 72.6 | 28.3 | 47.9 | 63.9 | 101 | 30.5 | 49.0 | 70.4 | 116 | 31.1 | 50.8 | 71.4 | 124 |
| | 610 | 22.1 | 35.3 | 46.9 | 72.6 | 28.3 | 47.9 | 63.9 | 101 | 30.5 | 49.0 | 70.4 | 116 | 31.1 | 50.8 | 71.4 | 124 |
| 5.20 | 305 | 22.1 | 35.3 | 46.9 | 72.6 | 27.7 | 46.4 | 61.9 | 97.5 | 30.0 | 47.8 | 68.4 | 112 | 30.6 | 49.5 | 69.7 | 120 |
| | 406 | 22.1 | 35.3 | 46.9 | 72.6 | 27.7 | 46.4 | 61.9 | 97.5 | 30.0 | 47.8 | 68.4 | 112 | 30.6 | 49.5 | 69.7 | 120 |
| | 610 | 22.1 | 35.3 | 46.9 | 72.6 | 27.7 | 46.4 | 61.9 | 97.5 | 30.0 | 47.8 | 68.4 | 112 | 30.6 | 49.5 | 69.7 | 120 |
| 5.60 | 305 | 22.1 | 35.3 | 46.9 | 72.6 | 27.1 | 44.7 | 59.6 | 93.9 | 29.5 | 46.4 | 66.2 | 108 | 30.0 | 48.2 | 68.0 | 116 |
| | 406 | 22.1 | 35.3 | 46.9 | 72.6 | 27.1 | 44.7 | 59.6 | 93.9 | 29.5 | 46.4 | 66.2 | 108 | 30.0 | 48.2 | 68.0 | 116 |
| | 610 | 22.1 | 35.3 | 46.9 | 72.6 | 27.1 | 44.7 | 59.6 | 93.9 | 29.5 | 46.4 | 66.2 | 108 | 30.0 | 48.2 | 68.0 | 116 |
| 6.00 | 305 | 21.9 | 35.2 | 46.9 | 72.6 | 26.3 | 42.8 | 57.1 | 89.9 | 28.9 | 45.1 | 64.0 | 103 | 29.5 | 46.8 | 66.2 | 111 |
| | 406 | 21.9 | 35.2 | 46.9 | 72.6 | 26.3 | 42.8 | 57.1 | 89.9 | 28.9 | 45.1 | 64.0 | 103 | 29.5 | 46.8 | 66.2 | 111 |
| | 610 | 21.9 | 35.2 | 46.9 | 72.6 | 26.3 | 42.8 | 57.1 | 89.9 | 28.9 | 45.1 | 64.0 | 103 | 29.5 | 46.7 | 66.1 | 111 |

[1] Deflection meets L/120 [3] Deflection meets L/360

[2] Deflection meets L/240 [4] Deflection meets L/600

If no note, deflection meets L/720

Bailey Metal Products, Dass Metal Products, DCM Metal Corp., EB Métal Inc., Imperial Building Products, Manugypse, Groupe UP, Trebor Building Products Ltd.

# COMBINED AXIAL AND LATERAL LOAD TABLE

Limiting Factored Axial Compressive Resistance Per Stud (kN)

## 0.50 kPa Factored Lateral Load

| Wall Height (m) | Stud Spacing (mm) | 800S162 | | | | 800S200 | | | | 800S250 | | | | 800S300 | | | |
|---|---|---|---|---|---|---|---|---|---|---|---|---|---|---|---|---|---|
| | | 230 MPa | 345 MPa | | | 230 MPa | 345 MPa | | | 230 MPa | 345 MPa | | | 230 MPa | 345 MPa | | |
| | | 43 | 54 | 68 | 97 | 43 | 54 | 68 | 97 | 43 | 54 | 68 | 97 | 43 | 54 | 68 | 97 |
| 2.40 | 305 | 21.2 | 34.5 | 46.1 | 71.8 | 28.4 | 49.3 | 65.5 | 102 | 31.1 | 52.0 | 75.2 | 126 | 31.8 | 54.2 | 77.0 | 138 |
| | 406 | 20.9 | 34.3 | 45.9 | 71.6 | 28.0 | 49.0 | 65.2 | 102 | 30.8 | 51.7 | 74.9 | 126 | 31.4 | 53.9 | 76.6 | 137 |
| | 610 | 20.4 | 33.8 | 45.4 | 71.1 | 27.4 | 48.3 | 64.6 | 101 | 30.1 | 51.1 | 74.2 | 125 | 30.8 | 53.2 | 76.0 | 137 |
| 2.80 | 305 | 20.9 | 34.2 | 45.9 | 71.5 | 28.0 | 48.9 | 65.1 | 102 | 30.6 | 51.4 | 74.5 | 125 | 31.3 | 53.5 | 76.0 | 136 |
| | 406 | 20.5 | 33.9 | 45.5 | 71.2 | 27.5 | 48.5 | 64.7 | 101 | 30.1 | 50.9 | 74.0 | 125 | 30.8 | 53.0 | 75.6 | 135 |
| | 610 | 19.7 | 33.2 | 44.8 | 70.5 | 26.6 | 47.6 | 63.8 | 100 | 29.2 | 50.0 | 73.1 | 124 | 29.9 | 52.1 | 74.6 | 134 |
| 3.20 | 305 | 20.5 | 33.9 | 45.5 | 71.2 | 27.5 | 48.4 | 64.7 | 101 | 30.0 | 50.5 | 73.5 | 124 | 30.6 | 52.5 | 74.8 | 134 |
| | 406 | 20.0 | 33.4 | 45.0 | 70.7 | 26.9 | 47.8 | 64.1 | 101 | 29.4 | 49.9 | 72.9 | 123 | 30.0 | 51.9 | 74.2 | 133 |
| | 610 | 19.0 | 32.5 | 44.1 | 69.8 | 25.7 | 46.7 | 62.9 | 99 | 28.1 | 48.7 | 71.6 | 122 | 28.8 | 50.8 | 73.0 | 132 |
| 3.60 | 305 | 20.1 | 33.5 | 45.1 | 70.8 | 27.0 | 47.9 | 64.1 | 101 | 29.2 | 49.4 | 72.2 | 122 | 29.9 | 51.4 | 73.3 | 131 |
| | 406 | 19.4 | 32.8 | 44.5 | 70.2 | 26.2 | 47.1 | 63.4 | 99.8 | 28.4 | 48.7 | 71.4 | 121 | 29.1 | 50.6 | 72.5 | 130 |
| | 610 | 18.1 | 31.6 | 43.3 | 69.0 | 24.7 | 45.6 | 61.8 | 98.2 | 26.9 | 47.2 | 69.8 | 119 | 27.6 | 49.1 | 70.9 | 128 |
| 4.00 | 305 | 19.6 | 33.0 | 44.6 | 70.3 | 26.3 | 47.1 | 63.5 | 99.9 | 28.4 | 48.1 | 70.7 | 119 | 29.0 | 50.0 | 71.5 | 127 |
| | 406 | 18.7 | 32.2 | 43.8 | 69.5 | 25.3 | 46.1 | 62.5 | 98.9 | 27.4 | 47.2 | 69.7 | 118 | 28.0 | 49.0 | 70.5 | 126 |
| | 610 | 17.1 | 30.7 | 42.3 | 68.0 | 23.4 | 44.2 | 60.5 | 96.9 | 25.5 | 45.3 | 67.6 | 116 | 26.1 | 47.2 | 68.5 | 124 |
| 4.40 | 305 | 19.0 | 32.4 | 44.0 | 69.7 | 25.2 | 45.5 | 61.8 | 99.0 | 27.3 | 46.6 | 68.4 | 115 | 28.0 | 48.4 | 69.3 | 123 |
| | 406 | 18.0 | 31.4 | 43.0 | 68.7 | 24.1 | 44.3 | 60.6 | 97.8 | 26.2 | 45.4 | 67.1 | 114 | 26.8 | 47.2 | 68.1 | 122 |
| | 610 | 16.0 | 29.5 | 41.2 | 66.8 | 21.8 | 41.9 | 58.2 | 95.3 | 23.8 | 43.2 | 64.6 | 111 | 24.5 | 45.0 | 65.8 | 119 |
| 4.80 | 305 | 18.3 | 31.7 | 43.3 | 68.9 | 24.1 | 43.5 | 59.4 | 95.9 | 26.2 | 44.8 | 65.8 | 111 | 26.8 | 46.6 | 66.9 | 119 |
| | 406 | 17.1 | 30.5 | 42.1 | 67.7 | 22.7 | 42.0 | 57.9 | 94.3 | 24.8 | 43.4 | 64.3 | 109 | 25.5 | 45.2 | 65.5 | 117 |
| | 610 | 14.8 | 28.3 | 39.9 | 65.4 | 20.0 | 39.3 | 55.1 | 91.3 | 22.1 | 40.7 | 61.3 | 106 | 22.8 | 42.6 | 62.7 | 114 |
| 5.20 | 305 | 17.6 | 30.9 | 42.5 | 68.1 | 22.7 | 41.2 | 56.6 | 91.8 | 24.9 | 42.8 | 62.9 | 106 | 25.6 | 44.6 | 64.4 | 114 |
| | 406 | 16.2 | 29.5 | 41.1 | 66.6 | 21.2 | 39.5 | 54.9 | 90.0 | 23.3 | 41.2 | 61.1 | 104 | 24.0 | 43.0 | 62.7 | 112 |
| | 610 | 13.5 | 26.8 | 38.4 | 63.8 | 18.1 | 36.3 | 51.6 | 86.4 | 20.2 | 38.1 | 57.7 | 100 | 20.9 | 39.9 | 59.4 | 108 |
| 5.60 | 305 | 16.8 | 30.0 | 41.6 | 67.0 | 21.3 | 38.7 | 53.5 | 87.2 | 23.5 | 40.6 | 59.8 | 101 | 24.3 | 42.5 | 61.8 | 108 |
| | 406 | 15.1 | 28.4 | 39.9 | 65.3 | 19.5 | 36.8 | 51.5 | 85.1 | 21.7 | 38.8 | 57.7 | 98.2 | 22.4 | 40.6 | 59.8 | 106 |
| | 610 | 12.0 | 25.3 | 36.7 | 61.9 | 16.1 | 33.2 | 47.8 | 81.0 | 18.2 | 35.3 | 53.8 | 93.8 | 19.0 | 37.2 | 56.0 | 102 |
| 6.00 | 305 | 15.7 | 29.0 | 40.5 | 65.8 | 19.8 | 36.0 | 50.1 | 82.2 | 22.1 | 38.4 | 56.5 | 94.8 | 22.8 | 40.2 | 59.0 | 103 |
| | 406 | 13.9 | 27.1 | 38.5 | 63.7 | 17.8 | 34.0 | 48.0 | 79.8 | 20.0 | 36.4 | 54.2 | 92.2 | 20.8 | 38.2 | 56.7 | 100 |
| | 610 | 10.5 | 23.5 | 34.9 | 59.7 | 14.1 | 30.1 | 43.9 | 75.3 | 16.1 | 32.5 | 49.9 | 87.3 | 16.9 | 34.3 | 52.4 | 95.0 |

[1] Deflection meets L/120 [3] Deflection meets L/360

[2] Deflection meets L/240 [4] Deflection meets L/600

If no note, deflection meets L/720

Bailey Metal Products, Dass Metal Products, DCM Metal Corp., EB Métal Inc., Imperial Building Products, Manugypse, Groupe UP, Trebor Building Products Ltd.

# COMBINED AXIAL AND LATERAL LOAD TABLE

Limiting Factored Axial Compressive Resistance Per Stud (kN)

## 1.00 kPa Factored Lateral Load

| Wall Height (m) | Stud Spacing (mm) | 800S162 | | | | 800S200 | | | | 800S250 | | | | 800S300 | | | |
|---|---|---|---|---|---|---|---|---|---|---|---|---|---|---|---|---|---|
| | | 230 MPa | 345 MPa | | | 230 MPa | 345 MPa | | | 230 MPa | 345 MPa | | | 230 MPa | 345 MPa | | |
| | | 43 | 54 | 68 | 97 | 43 | 54 | 68 | 97 | 43 | 54 | 68 | 97 | 43 | 54 | 68 | 97 |
| 2.40 | 305 | 20.4 | 33.8 | 45.4 | 71.1 | 27.4 | 48.3 | 64.6 | 101 | 30.1 | 51.1 | 74.2 | 125 | 30.8 | 53.2 | 76.0 | 137 |
| | 406 | 19.8 | 33.3 | 44.9 | 70.6 | 26.7 | 47.7 | 64.0 | 100 | 29.4 | 50.4 | 73.5 | 124 | 30.1 | 52.6 | 75.3 | 136 |
| | 610 | 18.7 | 32.2 | 43.9 | 69.6 | 25.4 | 46.4 | 62.7 | 99.2 | 28.1 | 49.2 | 72.2 | 123 | 28.8 | 51.3 | 74.0 | 134 |
| 2.80 | 305 | 19.7 | 33.2 | 44.8 | 70.5 | 26.6 | 47.6 | 63.8 | 100 | 29.2 | 50.0 | 73.1 | 124 | 29.9 | 52.1 | 74.6 | 134 |
| | 406 | 19.0 | 32.5 | 44.1 | 69.8 | 25.7 | 46.7 | 63.0 | 99.4 | 28.3 | 49.2 | 72.1 | 123 | 29.0 | 51.2 | 73.7 | 133 |
| | 610 | 17.5 | 31.1 | 42.7 | 68.5 | 24.0 | 44.9 | 61.2 | 97.7 | 26.4 | 47.4 | 70.2 | 121 | 27.2 | 49.5 | 71.9 | 131 |
| 3.20 | 305 | 19.0 | 32.5 | 44.1 | 69.8 | 25.7 | 46.7 | 62.9 | 99.4 | 28.1 | 48.7 | 71.6 | 122 | 28.8 | 50.8 | 73.0 | 132 |
| | 406 | 18.0 | 31.5 | 43.2 | 68.9 | 24.6 | 45.5 | 61.8 | 98.2 | 26.9 | 47.6 | 70.3 | 120 | 27.6 | 49.6 | 71.7 | 130 |
| | 610 | 16.0 | 29.7 | 41.4 | 67.1 | 22.2 | 43.1 | 59.4 | 95.9 | 24.5 | 45.3 | 67.8 | 118 | 25.2 | 47.3 | 69.3 | 127 |
| 3.60 | 305 | 18.1 | 31.6 | 43.3 | 69.0 | 24.7 | 45.6 | 61.8 | 98.2 | 26.9 | 47.2 | 69.8 | 119 | 27.6 | 49.1 | 70.9 | 128 |
| | 406 | 16.8 | 30.4 | 42.1 | 67.8 | 23.2 | 44.0 | 60.3 | 96.7 | 25.4 | 45.7 | 68.2 | 117 | 26.0 | 47.6 | 69.4 | 126 |
| | 610 | 14.3 | 28.0 | 39.7 | 65.4 | 20.3 | 41.0 | 57.3 | 93.7 | 22.3 | 42.8 | 65.0 | 114 | 23.1 | 44.7 | 66.3 | 123 |
| 4.00 | 305 | 17.1 | 30.7 | 42.3 | 68.0 | 23.4 | 44.2 | 60.5 | 96.9 | 25.5 | 45.3 | 67.6 | 116 | 26.1 | 47.2 | 68.5 | 124 |
| | 406 | 15.5 | 29.1 | 40.8 | 66.5 | 21.6 | 42.3 | 58.6 | 94.9 | 23.6 | 43.5 | 65.6 | 114 | 24.3 | 45.3 | 66.6 | 122 |
| | 610 | 12.4 | 26.2 | 37.9 | 63.5 | 18.0 | 38.5 | 54.9 | 91.1 | 19.9 | 39.9 | 61.6 | 109 | 20.6 | 41.7 | 62.8 | 117 |
| 4.40 | 305 | 16.0 | 29.5 | 41.2 | 66.8 | 21.8 | 41.9 | 58.2 | 95.3 | 23.8 | 43.2 | 64.6 | 111 | 24.5 | 45.0 | 65.8 | 119 |
| | 406 | 14.1 | 27.7 | 39.3 | 64.9 | 19.6 | 39.6 | 55.9 | 92.8 | 21.6 | 40.9 | 62.2 | 109 | 22.3 | 42.8 | 63.4 | 116 |
| | 610 | 10.4 | 24.1 | 35.7 | 61.2 | 15.4 | 35.1 | 51.3 | 88.0 | 17.2 | 36.6 | 57.5 | 103 | 18.0 | 38.5 | 58.8 | 111 |
| 4.80 | 305 | 14.8 | 28.3 | 39.9 | 65.4 | 20.0 | 39.3 | 55.1 | 91.3 | 22.1 | 40.7 | 61.3 | 106 | 22.8 | 42.6 | 62.7 | 114 |
| | 406 | 12.5 | 26.1 | 37.6 | 63.1 | 17.5 | 36.6 | 52.4 | 88.4 | 19.4 | 38.1 | 58.4 | 103 | 20.2 | 40.0 | 59.9 | 110 |
| | 610 | 8.3 | 21.9 | 33.4 | 58.6 | 12.6 | 31.4 | 47.1 | 82.7 | 14.4 | 33.1 | 52.9 | 96.5 | 15.2 | 35.0 | 54.5 | 104 |
| 5.20 | 305 | 13.5 | 26.8 | 38.4 | 63.8 | 18.1 | 36.3 | 51.6 | 86.4 | 20.2 | 38.1 | 57.7 | 100 | 20.9 | 39.9 | 59.4 | 108 |
| | 406 | 10.9 | 24.3 | 35.8 | 61.0 | 15.2 | 33.3 | 48.5 | 83.0 | 17.2 | 35.1 | 54.4 | 96.4 | 18.0 | 37.0 | 56.2 | 104 |
| | 610 | 6.0[4] | 19.4 | 30.8 | 55.7 | 9.8 | 27.6 | 42.5 | 76.5 | 11.5 | 29.5 | 48.1 | 89.2 | 12.3 | 31.3 | 50.0 | 96.7 |
| 5.60 | 305 | 12.0 | 25.3 | 36.7 | 61.9 | 16.1 | 33.2 | 47.8 | 81.0 | 18.2 | 35.3 | 53.8 | 93.8 | 19.0 | 37.2 | 56.0 | 102 |
| | 406 | 9.1 | 22.3 | 33.7 | 58.6 | 13.0 | 29.9 | 44.3 | 77.1 | 14.8 | 32.0 | 50.1 | 89.6 | 15.6 | 33.8 | 52.3 | 97.2 |
| | 610 | 3.7[3] | 16.9[4] | 28.0 | 52.5 | 7.1[4] | 23.7 | 37.8 | 69.9 | 8.7[4] | 25.7 | 43.1 | 81.6 | 9.4 | 27.5 | 45.4 | 89.0 |
| 6.00 | 305 | 10.5 | 23.5 | 34.9 | 59.7 | 14.1 | 30.1 | 43.9 | 75.3 | 16.1 | 32.5 | 49.9 | 87.3 | 16.9 | 34.3 | 52.4 | 95.0 |
| | 406 | 7.3[4] | 20.2 | 31.4 | 55.9 | 10.7 | 26.5 | 40.1 | 71.0 | 12.5 | 28.8 | 45.8 | 82.6 | 13.3 | 30.6 | 48.3 | 90.2 |
| | 610 | 1.5[3] | 14.2[3] | 25.0[4] | 48.9 | 4.4[3] | 19.9[4] | 33.1 | 63.1 | 5.8[3] | 22.1[4] | 38.2 | 73.9 | 6.6[3] | 23.8[4] | 40.8 | 81.2 |

[1] Deflection meets L/120 [3] Deflection meets L/360

[2] Deflection meets L/240 [4] Deflection meets L/600

If no note, deflection meets L/720

Bailey Metal Products, Dass Metal Products, DCM Metal Corp., EB Métal Inc., Imperial Building Products, Manugypse, Groupe UP, Trebor Building Products Ltd.

# COMBINED AXIAL AND LATERAL LOAD TABLE

Limiting Factored Axial Compressive Resistance Per Stud (kN)

## 1.50 kPa Factored Lateral Load

| Wall Height (m) | Stud Spacing (mm) | 800S162 | | | | 800S200 | | | | 800S250 | | | | 800S300 | | | |
|---|---|---|---|---|---|---|---|---|---|---|---|---|---|---|---|---|---|
| | | 230 MPa | 345 MPa | | | 230 MPa | 345 MPa | | | 230 MPa | 345 MPa | | | 230 MPa | 345 MPa | | |
| | | 43 | 54 | 68 | 97 | 43 | 54 | 68 | 97 | 43 | 54 | 68 | 97 | 43 | 54 | 68 | 97 |
| 2.40 | 305 | 19.5 | 33.0 | 44.6 | 70.4 | 26.4 | 47.4 | 63.6 | 100 | 29.1 | 50.1 | 73.2 | 124 | 29.8 | 52.3 | 75.0 | 135.5 |
| | 406 | 18.7 | 32.2 | 43.9 | 69.6 | 25.4 | 46.4 | 62.7 | 99.2 | 28.1 | 49.2 | 72.2 | 123 | 28.8 | 51.3 | 74.0 | 134.3 |
| | 610 | 17.0 | 30.7 | 42.4 | 68.2 | 23.5 | 44.5 | 60.8 | 97.3 | 26.1 | 47.2 | 70.1 | 121 | 26.8 | 49.4 | 72.0 | 132.1 |
| 2.80 | 305 | 18.6 | 32.1 | 43.8 | 69.5 | 25.3 | 46.2 | 62.5 | 99.0 | 27.8 | 48.7 | 71.6 | 122 | 28.5 | 50.8 | 73.2 | 132.8 |
| | 406 | 17.5 | 31.1 | 42.7 | 68.5 | 24.0 | 44.9 | 61.2 | 97.7 | 26.4 | 47.4 | 70.2 | 121 | 27.2 | 49.5 | 71.9 | 131.2 |
| | 610 | 15.2 | 29.0 | 40.7 | 66.5 | 21.3 | 42.3 | 58.7 | 95.1 | 23.7 | 44.8 | 67.4 | 118 | 24.5 | 46.8 | 69.1 | 128.1 |
| 3.20 | 305 | 17.5 | 31.1 | 42.7 | 68.5 | 24.0 | 44.9 | 61.2 | 97.6 | 26.3 | 47.0 | 69.7 | 120 | 27.0 | 49.0 | 71.1 | 129.5 |
| | 406 | 16.0 | 29.7 | 41.4 | 67.1 | 22.2 | 43.1 | 59.4 | 95.9 | 24.5 | 45.3 | 67.8 | 118 | 25.2 | 47.3 | 69.3 | 127.4 |
| | 610 | 13.0 | 26.9 | 38.7 | 64.4 | 18.8 | 39.6 | 56.0 | 92.4 | 21.0 | 41.8 | 64.1 | 114 | 21.7 | 43.8 | 65.7 | 123.3 |
| 3.60 | 305 | 16.2 | 29.8 | 41.5 | 67.2 | 22.5 | 43.3 | 59.6 | 96.0 | 24.6 | 45.0 | 67.4 | 116 | 25.3 | 46.9 | 68.6 | 125.4 |
| | 406 | 14.3 | 28.0 | 39.7 | 65.4 | 20.3 | 41.0 | 57.3 | 93.7 | 22.3 | 42.8 | 65.0 | 114 | 23.1 | 44.7 | 66.3 | 122.7 |
| | 610 | 10.6 | 24.6 | 36.3 | 62.0 | 16.0 | 36.6 | 52.9 | 89.2 | 17.9 | 38.4 | 60.3 | 109 | 18.7 | 40.3 | 61.7 | 117.4 |
| 4.00 | 305 | 14.8 | 28.4 | 40.1 | 65.7 | 20.7 | 41.3 | 57.7 | 94.0 | 22.6 | 42.6 | 64.6 | 113 | 23.4 | 44.4 | 65.6 | 120.5 |
| | 406 | 12.4 | 26.2 | 37.9 | 63.5 | 18.0 | 38.5 | 54.9 | 91.1 | 19.9 | 39.9 | 61.6 | 109 | 20.6 | 41.7 | 62.8 | 117.2 |
| | 610 | 8.0 | 21.9 | 33.6 | 59.1 | 12.8 | 33.1 | 49.4 | 85.5 | 14.6 | 34.6 | 55.8 | 103 | 15.4 | 36.5 | 57.2 | 110.7 |
| 4.40 | 305 | 13.2 | 26.8 | 38.4 | 64.0 | 18.5 | 38.4 | 54.7 | 91.6 | 20.5 | 39.9 | 61.0 | 107 | 21.2 | 41.7 | 62.2 | 114.9 |
| | 406 | 10.4 | 24.1 | 35.7 | 61.2 | 15.4 | 35.1 | 51.3 | 88.0 | 17.2 | 36.6 | 57.5 | 103 | 18.0 | 38.5 | 58.8 | 110.9 |
| | 610 | 5.2[4] | 19.0 | 30.6 | 55.9 | 9.3 | 28.8 | 44.8 | 81.1 | 11.0 | 30.5 | 50.6 | 95.6 | 11.8 | 32.3 | 52.2 | 103.2 |
| 4.80 | 305 | 11.4 | 25.0 | 36.6 | 62.0 | 16.2 | 35.3 | 51.0 | 86.9 | 18.2 | 36.9 | 57.0 | 101 | 18.9 | 38.7 | 58.5 | 108.7 |
| | 406 | 8.3 | 21.9 | 33.4 | 58.6 | 12.6 | 31.4 | 47.1 | 82.7 | 14.4 | 33.1 | 52.9 | 96.5 | 15.2 | 35.0 | 54.5 | 104 |
| | 610 | 2.3[3] | 15.9[4] | 27.3 | 52.3 | 5.9[4] | 24.2 | 39.6 | 74.6 | 7.4[4] | 26.1 | 45.0 | 87.6 | 8.2 | 27.8 | 46.8 | 95.0 |
| 5.20 | 305 | 9.6 | 23.0 | 34.5 | 59.7 | 13.9 | 31.8 | 46.9 | 81.3 | 15.7 | 33.7 | 52.8 | 94.6 | 16.5 | 35.5 | 54.6 | 102.1 |
| | 406 | 6.0[4] | 19.4 | 30.8 | 55.7 | 9.8 | 27.6 | 42.5 | 76.5 | 11.5 | 29.5 | 48.1 | 89.2 | 12.3 | 31.3 | 50.0 | 96.7 |
| | 610 | | 12.7[3] | 23.8[4] | 48.3 | 2.4[3] | 19.7[4] | 34.2 | 67.3 | 3.8[3] | 21.7[4] | 39.3 | 79.2 | 4.5[4] | 23.3 | 41.4 | 86.4 |
| 5.60 | 305 | 7.7[4] | 20.9 | 32.2 | 57.0 | 11.4 | 28.3 | 42.6 | 75.3 | 13.2 | 30.4 | 48.3 | 87.5 | 14.0 | 32.2 | 50.6 | 95.1 |
| | 406 | 3.7[3] | 16.9[4] | 28.0 | 52.5 | 7.1[4] | 23.7 | 37.8 | 69.9 | 8.7[4] | 25.7 | 43.1 | 81.6 | 9.4 | 27.5 | 45.4 | 89.0 |
| | 610 | | 9.5[3] | 20.2[3] | 44.0 | | 15.3[3] | 28.9[4] | 59.9 | 0.3[3] | 17.3[3] | 33.6[4] | 70.7 | 1.0[3] | 18.9[3] | 35.9 | 77.7 |
| 6.00 | 305 | 5.7[3] | 18.7[4] | 29.7 | 54.1 | 9.0[4] | 24.7 | 38.2 | 69.0 | 10.8 | 27.1 | 43.8 | 80.4 | 11.6 | 28.8 | 46.4 | 87.9 |
| | 406 | 1.5[3] | 14.2[3] | 25.0[4] | 48.9 | 4.4[3] | 19.9[4] | 33.1 | 63.1 | 5.8[3] | 22.1[4] | 38.2 | 73.9 | 6.6[3] | 23.8[4] | 40.8 | 81.2 |
| | 610 | | 6.2[2] | 16.5[3] | 39.5[3] | | 11.1[3] | 23.7[3] | 52.5[4] | | 13.1[3] | 28.1[3] | 62.2 | | 14.5[3] | 30.5[4] | 69.0 |

[1] Deflection meets L/120 [3] Deflection meets L/360

[2] Deflection meets L/240 [4] Deflection meets L/600

If no note, deflection meets L/720

Bailey Metal Products, Dass Metal Products, DCM Metal Corp., EB Métal Inc., Imperial Building Products, Manugypse, Groupe UP, Trebor Building Products Ltd.

# COMBINED AXIAL AND LATERAL LOAD TABLE

Limiting Factored Axial Compressive Resistance Per Stud (kN)

## 2.00 kPa Factored Lateral Load

| Wall Height (m) | Stud Spacing (mm) | 800S162 | | | | 800S200 | | | | 800S250 | | | | 800S300 | | | |
|---|---|---|---|---|---|---|---|---|---|---|---|---|---|---|---|---|---|
| | | 230 MPa | 345 MPa | | | 230 MPa | 345 MPa | | | 230 MPa | 345 MPa | | | 230 MPa | 345 MPa | | |
| | | 43 | 54 | 68 | 97 | 43 | 54 | 68 | 97 | 43 | 54 | 68 | 97 | 43 | 54 | 68 | 97 |
| 2.40 | 305 | 18.7 | 32.2 | 43.9 | 69.6 | 25.4 | 46.4 | 62.7 | 99.2 | 28.1 | 49.2 | 72.2 | 123 | 28.8 | 51.3 | 74.0 | 134 |
| | 406 | 17.6 | 31.2 | 42.9 | 68.7 | 24.2 | 45.1 | 61.5 | 98.0 | 26.7 | 47.9 | 70.8 | 122 | 27.5 | 50.0 | 72.6 | 133 |
| | 610 | 15.4 | 29.2 | 40.9 | 66.7 | 21.6 | 42.6 | 59.0 | 95.5 | 24.1 | 45.3 | 68.1 | 119 | 24.8 | 47.5 | 70.0 | 130 |
| 2.80 | 305 | 17.5 | 31.1 | 42.7 | 68.5 | 24.0 | 44.9 | 61.2 | 97.7 | 26.4 | 47.4 | 70.2 | 121 | 27.2 | 49.5 | 71.9 | 131 |
| | 406 | 15.9 | 29.7 | 41.4 | 67.1 | 22.2 | 43.2 | 59.5 | 96.0 | 24.6 | 45.6 | 68.4 | 119 | 25.3 | 47.7 | 70.0 | 129 |
| | 610 | 12.9 | 26.9 | 38.7 | 64.4 | 18.7 | 39.7 | 56.1 | 92.6 | 21.0 | 42.2 | 64.6 | 115 | 21.8 | 44.2 | 66.4 | 125 |
| 3.20 | 305 | 16.0 | 29.7 | 41.4 | 67.1 | 22.2 | 43.1 | 59.4 | 95.9 | 24.5 | 45.3 | 67.8 | 118 | 25.2 | 47.3 | 69.3 | 127 |
| | 406 | 14.0 | 27.8 | 39.6 | 65.3 | 19.9 | 40.8 | 57.2 | 93.6 | 22.2 | 43.0 | 65.4 | 115 | 22.9 | 45.0 | 66.9 | 125 |
| | 610 | 10.1 | 24.2 | 36.0 | 61.7 | 15.4 | 36.2 | 52.6 | 89.0 | 17.5 | 38.5 | 60.5 | 110 | 18.3 | 40.4 | 62.1 | 119 |
| 3.60 | 305 | 14.3 | 28.0 | 39.7 | 65.4 | 20.3 | 41.0 | 57.3 | 93.7 | 22.3 | 42.8 | 65.0 | 114 | 23.1 | 44.7 | 66.3 | 123 |
| | 406 | 11.8 | 25.7 | 37.4 | 63.1 | 17.4 | 38.0 | 54.4 | 90.7 | 19.4 | 39.9 | 61.8 | 110 | 20.1 | 41.8 | 63.2 | 119 |
| | 610 | 7.0 | 21.2 | 32.9 | 58.5 | 11.8 | 32.3 | 48.6 | 84.8 | 13.6 | 34.2 | 55.7 | 104 | 14.4 | 36.1 | 57.2 | 112 |
| 4.00 | 305 | 12.4 | 26.2 | 37.9 | 63.5 | 18.0 | 38.5 | 54.9 | 91.1 | 19.9 | 39.9 | 61.6 | 109 | 20.6 | 41.7 | 62.8 | 117 |
| | 406 | 9.5 | 23.3 | 35.0 | 60.6 | 14.5 | 34.9 | 51.2 | 87.3 | 16.3 | 36.3 | 57.7 | 105 | 17.1 | 38.2 | 59.0 | 113 |
| | 610 | 3.7[4] | 17.8 | 29.4 | 54.9 | 7.8 | 27.9 | 44.1 | 80.0 | 9.4 | 29.6 | 50.3 | 96.7 | 10.3 | 31.4 | 51.7 | 104 |
| 4.40 | 305 | 10.4 | 24.1 | 35.7 | 61.2 | 15.4 | 35.1 | 51.3 | 88.0 | 17.2 | 36.6 | 57.5 | 103 | 18.0 | 38.5 | 58.8 | 111 |
| | 406 | 6.9 | 20.7 | 32.3 | 57.7 | 11.3 | 30.8 | 47.0 | 83.3 | 13.0 | 32.5 | 52.9 | 98.1 | 13.8 | 34.3 | 54.4 | 106 |
| | 610 | 0.3[3] | 14.2[4] | 25.6 | 50.7 | 3.7[4] | 22.8 | 38.6 | 74.4 | 5.1[4] | 24.6 | 44.1 | 88.3 | 5.9 | 26.3 | 45.8 | 96 |
| 4.80 | 305 | 8.3 | 21.9 | 33.4 | 58.6 | 12.6 | 31.4 | 47.1 | 82.7 | 14.4 | 33.1 | 52.9 | 96.5 | 15.2 | 35.0 | 54.5 | 104 |
| | 406 | 4.2[4] | 17.9 | 29.3 | 54.4 | 8.1[4] | 26.6 | 42.1 | 77.2 | 9.7 | 28.4 | 47.6 | 90.6 | 10.5 | 30.2 | 49.3 | 97.9 |
| | 610 | | 10.4[3] | 21.6[4] | 46.2 | | 17.6[3] | 32.6 | 66.9 | 0.8[3] | 19.5[4] | 37.7 | 79.2 | 1.6[3] | 21.1[4] | 39.6 | 86.4 |
| 5.20 | 305 | 6.0[4] | 19.4 | 30.8 | 55.7 | 9.8 | 27.6 | 42.5 | 76.5 | 11.5 | 29.5 | 48.1 | 89.2 | 12.3 | 31.3 | 50.0 | 96.7 |
| | 406 | 1.5[3] | 14.9[3] | 26.1 | 50.7 | 4.8[3] | 22.2[4] | 36.9 | 70.3 | 6.3[4] | 24.2 | 42.2 | 82.5 | 7.1[4] | 25.9 | 44.2 | 89.7 |
| | 610 | | 6.6[3] | 17.4[3] | 41.3[4] | | 12.5[3] | 26.6[3] | 58.9 | | 14.4[3] | 31.2[4] | 69.9 | | 16.0[3] | 33.3[4] | 76.8 |
| 5.60 | 305 | 3.7[3] | 16.9[4] | 28.0 | 52.5 | 7.1[4] | 23.7 | 37.8 | 69.9 | 8.7[4] | 25.7 | 43.1 | 81.6 | 9.4 | 27.5 | 45.4 | 89.0 |
| | 406 | | 11.8[3] | 22.7[3] | 46.7 | 1.7[3] | 18.0[3] | 31.7[4] | 63.1 | 3.0[3] | 20.0[4] | 36.7 | 74.2 | 3.7[3] | 21.7[4] | 39.0 | 81.3 |
| | 610 | | 2.8[2] | 13.1[3] | 36.2[3] | | 7.7[3] | 20.8[3] | 50.7[4] | | 9.6[3] | 24.9[3] | 60.7 | | 11.0[3] | 27.1[3] | 67.3 |
| 6.00 | 305 | 1.5[3] | 14.2[3] | 25.0[4] | 48.9 | 4.4[3] | 19.9[4] | 33.1 | 63.1 | 5.8[3] | 22.1[4] | 38.2 | 73.9 | 6.6[3] | 23.8[4] | 40.8 | 81.2 |
| | 406 | | 8.8[3] | 19.2[3] | 42.5[4] | | 13.9[3] | 26.7[3] | 55.9 | | 16.0[3] | 31.4[4] | 66.0 | 0.5[3] | 17.5[3] | 33.8[4] | 73.0 |
| | 610 | | | 8.9[2] | 31.0[3] | | 3.3[2] | 15.3[3] | 42.9[3] | | 5.0[2] | 19.0[3] | 51.7[3] | | 6.2[2] | 21.2[3] | 58.0[4] |

[1] Deflection meets L/120 [3] Deflection meets L/360

[2] Deflection meets L/240 [4] Deflection meets L/600

If no note, deflection meets L/720

Bailey Metal Products, Dass Metal Products, DCM Metal Corp., EB Metal Inc., Imperial Building Products, Manugypse, Groupe UP, Trebor Building Products Ltd.

# COMBINED AXIAL AND LATERAL LOAD TABLE

Limiting Factored Axial Compressive Resistance Per Stud (kN)

## 2.50 kPa Factored Lateral Load

| Wall Height (m) | Stud Spacing (mm) | 800S162 | | | | 800S200 | | | | 800S250 | | | | 800S300 | | | |
|---|---|---|---|---|---|---|---|---|---|---|---|---|---|---|---|---|---|
| | | 230 MPa | 345 MPa | | | 230 MPa | 345 MPa | | | 230 MPa | 345 MPa | | | 230 MPa | 345 MPa | | |
| | | 43 | 54 | 68 | 97 | 43 | 54 | 68 | 97 | 43 | 54 | 68 | 97 | 43 | 54 | 68 | 97 |
| 2.40 | 305 | 17.9 | 31.5 | 43.2 | 68.9 | 24.5 | 45.5 | 61.8 | 98.3 | 27.1 | 48.2 | 71.2 | 122 | 27.8 | 50.3 | 73.0 | 133 |
| | 406 | 16.5 | 30.2 | 41.9 | 67.7 | 22.9 | 43.9 | 60.2 | 96.7 | 25.4 | 46.6 | 69.5 | 120 | 26.1 | 48.7 | 71.3 | 131 |
| | 610 | 13.8 | 27.7 | 39.5 | 65.3 | 19.7 | 40.7 | 57.1 | 93.7 | 22.1 | 43.4 | 66.1 | 117 | 22.9 | 45.6 | 68.0 | 128 |
| 2.80 | 305 | 16.3 | 30.0 | 41.7 | 67.5 | 22.7 | 43.6 | 59.9 | 96.4 | 25.1 | 46.1 | 68.8 | 119 | 25.8 | 48.1 | 70.5 | 130 |
| | 406 | 14.4 | 28.3 | 40.0 | 65.8 | 20.5 | 41.4 | 57.8 | 94.3 | 22.8 | 43.9 | 66.5 | 117 | 23.6 | 46.0 | 68.2 | 127 |
| | 610 | 10.7 | 24.8 | 36.6 | 62.4 | 16.2 | 37.1 | 53.6 | 90.0 | 18.3 | 39.6 | 61.9 | 112 | 19.1 | 41.6 | 63.7 | 122 |
| 3.20 | 305 | 14.5 | 28.3 | 40.0 | 65.7 | 20.5 | 41.4 | 57.7 | 94.2 | 22.7 | 43.5 | 66.0 | 116 | 23.5 | 45.5 | 67.5 | 125 |
| | 406 | 12.1 | 26.0 | 37.8 | 63.5 | 17.7 | 38.5 | 54.9 | 91.3 | 19.8 | 40.7 | 62.9 | 112 | 20.6 | 42.7 | 64.5 | 122 |
| | 610 | 7.3 | 21.5 | 33.3 | 59.1 | 12.2 | 32.9 | 49.3 | 85.7 | 14.1 | 35.1 | 56.9 | 106 | 14.9 | 37.1 | 58.6 | 115 |
| 3.60 | 305 | 12.5 | 26.3 | 38.0 | 63.7 | 18.1 | 38.8 | 55.1 | 91.5 | 20.1 | 40.6 | 62.6 | 111 | 20.9 | 42.5 | 64.0 | 120 |
| | 406 | 9.4 | 23.4 | 35.1 | 60.8 | 14.6 | 35.1 | 51.5 | 87.8 | 16.5 | 37.0 | 58.7 | 107 | 17.2 | 38.9 | 60.2 | 116 |
| | 610 | 3.6 | 17.8 | 29.6 | 55.2 | 7.7 | 28.1 | 44.4 | 80.5 | 9.4 | 30.1 | 51.2 | 99 | 10.2 | 31.9 | 52.8 | 107 |
| 4.00 | 305 | 10.2 | 24.0 | 35.7 | 61.3 | 15.3 | 35.8 | 52.1 | 88.3 | 17.2 | 37.2 | 58.7 | 106 | 18.0 | 39.1 | 59.9 | 114 |
| | 406 | 6.5 | 20.5 | 32.2 | 57.7 | 11.1 | 31.3 | 47.6 | 83.6 | 12.8 | 32.9 | 54.0 | 101 | 13.6 | 34.7 | 55.3 | 109 |
| | 610 | | 13.8[4] | 25.4 | 50.7 | 3.1[4] | 22.8 | 39.0 | 74.6 | 4.5 | 24.6 | 44.8 | 90.7 | 5.3 | 26.4 | 46.4 | 98 |
| 4.40 | 305 | 7.8 | 21.5 | 33.1 | 58.5 | 12.3 | 31.9 | 48.0 | 84.5 | 14.1 | 33.5 | 54.0 | 99.4 | 14.9 | 35.3 | 55.5 | 107 |
| | 406 | 3.5[4] | 17.4 | 28.9 | 54.2 | 7.4 | 26.7 | 42.7 | 78.8 | 9.0 | 28.5 | 48.4 | 93.1 | 9.8 | 30.2 | 50.0 | 101 |
| | 610 | | 9.5[3] | 20.9[4] | 45.8 | | 17.1[4] | 32.7 | 68.0 | | 19.0[4] | 37.8 | 81.2 | 0.3[3] | 20.6[4] | 39.6 | 88.4 |
| 4.80 | 305 | 5.2[4] | 18.8 | 30.3 | 55.4 | 9.2 | 27.8 | 43.3 | 78.6 | 10.8 | 29.6 | 48.9 | 92.0 | 11.6 | 31.3 | 50.6 | 99.4 |
| | 406 | 0.4[3] | 14.0[4] | 25.4 | 50.2 | 3.7[3] | 22.0[4] | 37.3 | 72.0 | 5.2[4] | 23.9 | 42.5 | 84.8 | 5.9[4] | 25.6 | 44.4 | 92.1 |
| | 610 | | 5.2[3] | 16.2[3] | 40.4[4] | | 11.3[3] | 26.1[3] | 59.7 | | 13.2[3] | 30.7[4] | 71.3 | | 14.8[3] | 32.6[4] | 78.2 |
| 5.20 | 305 | 2.6[3] | 16.0[4] | 27.2 | 51.9 | 6.0[3] | 23.5 | 38.3 | 71.8 | 7.6[4] | 25.5 | 43.6 | 84.1 | 8.4 | 27.2 | 45.6 | 91.4 |
| | 406 | | 10.6[3] | 21.6[3] | 45.9 | 0.1[3] | 17.2[3] | 31.6[4] | 64.4 | 1.3[3] | 19.2[4] | 36.6 | 76.1 | 2.1[3] | 20.8[4] | 38.6 | 83.1 |
| | 610 | | 0.8[2] | 11.4[3] | 34.8[3] | | 5.8[3] | 19.5[3] | 50.9[4] | | 7.7[3] | 23.6[3] | 61.2 | | 9.0[3] | 25.7[3] | 67.8 |
| 5.60 | 305 | | 13.1[3] | 24.0[4] | 48.1 | 3.0[3] | 19.3[3] | 33.2 | 64.7 | 4.4[3] | 21.4[4] | 38.3 | 76.0 | 5.1[3] | 23.1[4] | 40.6 | 83.2 |
| | 406 | | 7.2[3] | 17.8[3] | 41.3[4] | | 12.7[3] | 26.1[3] | 56.7 | | 14.6[3] | 30.6[4] | 67.2 | | 16.2[3] | 32.9[4] | 74.1 |
| | 610 | | | 6.6[2] | 29.0[3] | | 0.7[2] | 13.3[3] | 42.3[3] | | 2.5[2] | 16.9[3] | 51.3[3] | | 3.6[2] | 19.0[3] | 57.5[4] |
| 6.00 | 305 | | 10.1[3] | 20.6[3] | 44.1[4] | 0.1[3] | 15.3[3] | 28.2[3] | 57.6 | 1.3[3] | 17.5[3] | 33.0[4] | 67.9 | 2.0[3] | 19.0[3] | 35.5 | 75.0 |
| | 406 | | 3.8[2] | 13.9[3] | 36.6[3] | | 8.4[3] | 20.8[3] | 49.2[4] | | 10.3[3] | 25.0[3] | 58.6[4] | | 11.7[3] | 27.3[3] | 65.3 |
| | 610 | | | 2.0[2] | 23.2[2] | | | 7.6[2] | 34.1[3] | | | 10.7[2] | 42.0[3] | | | 12.6[3] | 47.8[3] |

[1] Deflection meets L/120 [3] Deflection meets L/360

[2] Deflection meets L/240 [4] Deflection meets L/600

If no note, deflection meets L/720

Bailey Metal Products, Dass Metal Products, DCM Metal Corp., EB Métal Inc., Imperial Building Products, Manugypse, Groupe UP, Trebor Building Products Ltd.

# COMBINED AXIAL AND LATERAL LOAD TABLE

Limiting Factored Axial Compressive Resistance Per Stud (kN)

## 3.00 kPa Factored Lateral Load

| Wall Height (m) | Stud Spacing (mm) | 800S162 | | | | 800S200 | | | | 800S250 | | | | 800S300 | | | |
|---|---|---|---|---|---|---|---|---|---|---|---|---|---|---|---|---|---|
| | | 230 MPa | 345 MPa | | | 230 MPa | 345 MPa | | | 230 MPa | 345 MPa | | | 230 MPa | 345 MPa | | |
| | | 43 | 54 | 68 | 97 | 43 | 54 | 68 | 97 | 43 | 54 | 68 | 97 | 43 | 54 | 68 | 97 |
| 2.40 | 305 | 17.0 | 30.7 | 42.4 | 68.2 | 23.5 | 44.5 | 60.8 | 97.3 | 26.1 | 47.2 | 70.1 | 121 | 26.8 | 49.4 | 72.0 | 132 |
| | 406 | 15.4 | 29.2 | 40.9 | 66.7 | 21.6 | 42.6 | 59.0 | 95.5 | 24.1 | 45.3 | 68.1 | 119 | 24.8 | 47.5 | 70.0 | 130 |
| | 610 | 12.1 | 26.2 | 38.0 | 63.8 | 17.8 | 38.8 | 55.3 | 91.8 | 20.1 | 41.6 | 64.1 | 114 | 20.9 | 43.6 | 66.0 | 125 |
| 2.80 | 305 | 15.2 | 29.0 | 40.7 | 66.5 | 21.3 | 42.3 | 58.7 | 95.1 | 23.7 | 44.8 | 67.4 | 118 | 24.5 | 46.8 | 69.1 | 128 |
| | 406 | 12.9 | 26.9 | 38.7 | 64.4 | 18.7 | 39.7 | 56.1 | 92.6 | 21.0 | 42.2 | 64.6 | 115 | 21.8 | 44.2 | 66.4 | 125 |
| | 610 | 8.5 | 22.8 | 34.6 | 60.4 | 13.6 | 34.5 | 51.0 | 87.5 | 15.7 | 37.0 | 59.1 | 109 | 16.5 | 39.0 | 61.0 | 119 |
| 3.20 | 305 | 13.0 | 26.9 | 38.7 | 64.4 | 18.8 | 39.6 | 56.0 | 92.4 | 21.0 | 41.8 | 64.1 | 114 | 21.7 | 43.8 | 65.7 | 123 |
| | 406 | 10.1 | 24.2 | 36.0 | 61.7 | 15.4 | 36.2 | 52.6 | 89.0 | 17.5 | 38.5 | 60.5 | 110 | 18.3 | 40.4 | 62.1 | 119 |
| | 610 | 4.5 | 18.9 | 30.7 | 56.4 | 8.9 | 29.6 | 46.0 | 82.3 | 10.7 | 31.8 | 53.3 | 102 | 11.5 | 33.7 | 55.1 | 111 |
| 3.60 | 305 | 10.6 | 24.6 | 36.3 | 62.0 | 16.0 | 36.6 | 52.9 | 89.2 | 17.9 | 38.4 | 60.3 | 109 | 18.7 | 40.3 | 61.7 | 117 |
| | 406 | 7.0 | 21.2 | 32.9 | 58.5 | 11.8 | 32.3 | 48.6 | 84.8 | 13.6 | 34.2 | 55.7 | 104 | 14.4 | 36.1 | 57.2 | 112 |
| | 610 | 0.2[4] | 14.6 | 26.3 | 51.8 | 3.8 | 24.0 | 40.3 | 76.3 | 5.3 | 26.1 | 46.8 | 93.8 | 6.2 | 27.9 | 48.5 | 102 |
| 4.00 | 305 | 8.0 | 21.9 | 33.6 | 59.1 | 12.8 | 33.1 | 49.4 | 85.5 | 14.6 | 34.6 | 55.8 | 103 | 15.4 | 36.5 | 57.2 | 111 |
| | 406 | 3.7[4] | 17.8 | 29.4 | 54.9 | 7.8 | 27.9 | 44.1 | 80.0 | 9.4 | 29.6 | 50.3 | 96.7 | 10.3 | 31.4 | 51.7 | 104 |
| | 610 | | 9.9[3] | 21.5 | 46.6 | | 18.0[4] | 34.0 | 69.4 | | 19.9 | 39.6 | 84.8 | 0.6[4] | 21.6 | 41.3 | 92.2 |
| 4.40 | 305 | 5.2[4] | 19.0 | 30.6 | 55.9 | 9.3 | 28.8 | 44.8 | 81.1 | 11.0 | 30.5 | 50.6 | 95.6 | 11.8 | 32.3 | 52.2 | 103 |
| | 406 | 0.3[3] | 14.2[4] | 25.6 | 50.7 | 3.7[4] | 22.8 | 38.6 | 74.4 | 5.1[4] | 24.6 | 44.1 | 88.3 | 5.9 | 26.3 | 45.8 | 95.7 |
| | 610 | | 5.1[3] | 16.3[3] | 40.9 | | 11.6[3] | 27.0[4] | 61.8 | | 13.6[3] | 31.8[4] | 74.4 | | 15.1[3] | 33.7 | 81.4 |
| 4.80 | 305 | 2.3[3] | 15.9[4] | 27.3 | 52.3 | 5.9[4] | 24.2 | 39.6 | 74.6 | 7.4[4] | 26.1 | 45.0 | 87.6 | 8.2 | 27.8 | 46.8 | 95.0 |
| | 406 | | 10.4[3] | 21.6[4] | 46.2 | | 17.6[3] | 32.6 | 66.9 | 0.8[3] | 19.5[4] | 37.7 | 79.2 | 1.6[3] | 21.1[4] | 39.6 | 86.4 |
| | 610 | | 0.2[2] | 11.0[3] | 34.8[3] | | 5.4[3] | 19.8[3] | 52.7[4] | | 7.3[3] | 24.0[3] | 63.6 | | 8.7[3] | 26.0[3] | 70.3 |
| 5.20 | 305 | | 12.7[3] | 23.8[4] | 48.3 | 2.4[3] | 19.7[4] | 34.2 | 67.3 | 3.8[3] | 21.7[4] | 39.3 | 79.2 | 4.5[4] | 23.3 | 41.4 | 86.4 |
| | 406 | | 6.6[3] | 17.4[3] | 41.3[4] | | 12.5[3] | 26.6[3] | 58.9 | | 14.4[3] | 31.2[4] | 69.9 | | 16.0[3] | 33.3[4] | 76.8 |
| | 610 | | | 5.7[2] | 28.5[3] | | | 12.9[3] | 43.4[3] | | 1.3[2] | 16.5[3] | 52.9[4] | | 2.5[3] | 18.5[3] | 59.2[4] |
| 5.60 | 305 | | 9.5[3] | 20.2[3] | 44.0 | | 15.3[3] | 28.9[4] | 59.9 | 0.3[3] | 17.3[3] | 33.6[4] | 70.7 | 1.0[3] | 18.9[3] | 35.9 | 77.7 |
| | 406 | | 2.8[2] | 13.1[3] | 36.2[3] | | 7.7[3] | 20.8[3] | 50.7[4] | | 9.6[3] | 24.9[3] | 60.7 | | 11.0[3] | 27.1[3] | 67.3 |
| | 610 | | | 0.5[2] | 22.2[3] | | | 6.4[2] | 34.4[3] | | | 9.4[2] | 42.6[3] | | | 11.4[3] | 48.4[3] |
| 6.00 | 305 | | 6.2[2] | 16.5[3] | 39.5[3] | | 11.1[3] | 23.7[3] | 52.5[4] | | 13.1[3] | 28.1[3] | 62.2 | | 14.5[3] | 30.5[4] | 69.0 |
| | 406 | | | 8.9[2] | 31.0[3] | | 3.3[2] | 15.3[3] | 42.9[3] | | 5.0[2] | 19.0[3] | 51.7[3] | | 6.2[2] | 21.2[3] | 58.0[4] |
| | 610 | | | | 15.9[2] | | | 0.5[2] | 25.9[2] | | | 3.0[2] | 33.0[3] | | | 4.7[2] | 38.3[3] |

[1] Deflection meets L/120 [3] Deflection meets L/360

[2] Deflection meets L/240 [4] Deflection meets L/600

If no note, deflection meets L/720

Bailey Metal Products, Dass Metal Products, DCM Metal Corp., EB Métal Inc., Imperial Building Products, Manugypse, Groupe UP, Trebor Building Products Ltd.

# COMBINED AXIAL AND LATERAL LOAD TABLE

Limiting Factored Axial Compressive Resistance Per Stud (kN)

## 3.50 kPa Factored Lateral Load

| Wall Height (m) | Stud Spacing (mm) | 800S162 | | | | 800S200 | | | | 800S250 | | | | 800S300 | | | |
|---|---|---|---|---|---|---|---|---|---|---|---|---|---|---|---|---|---|
| | | 230 MPa | 345 MPa | | | 230 MPa | 345 MPa | | | 230 MPa | 345 MPa | | | 230 MPa | 345 MPa | | |
| | | 43 | 54 | 68 | 97 | 43 | 54 | 68 | 97 | 43 | 54 | 68 | 97 | 43 | 54 | 68 | 97 |
| 2.40 | 305 | 16.2 | 30.0 | 41.7 | 67.4 | 22.6 | 43.6 | 59.9 | 96.4 | 25.1 | 46.3 | 69.1 | 120 | 25.8 | 48.4 | 71.0 | 131.0 |
| | 406 | 14.3 | 28.2 | 39.9 | 65.7 | 20.3 | 41.3 | 57.8 | 94.3 | 22.7 | 44.1 | 66.8 | 117 | 23.5 | 46.2 | 68.6 | 128.4 |
| | 610 | 10.5 | 24.7 | 36.5 | 62.4 | 15.9 | 37.0 | 53.5 | 90.0 | 18.1 | 39.7 | 62.1 | 112 | 19.0 | 41.7 | 64.0 | 123.1 |
| 2.80 | 305 | 14.1 | 27.9 | 39.7 | 65.4 | 20.0 | 41.0 | 57.4 | 93.9 | 22.4 | 43.5 | 66.0 | 116 | 23.1 | 45.5 | 67.7 | 126.6 |
| | 406 | 11.5 | 25.5 | 37.3 | 63.1 | 17.0 | 38.0 | 54.4 | 90.9 | 19.2 | 40.5 | 62.8 | 113 | 20.0 | 42.5 | 64.6 | 123.0 |
| | 610 | 6.4 | 20.8 | 32.6 | 58.4 | 11.1 | 32.0 | 48.5 | 85.0 | 13.1 | 34.5 | 56.4 | 106 | 13.9 | 36.5 | 58.3 | 115.9 |
| 3.20 | 305 | 11.6 | 25.6 | 37.3 | 63.1 | 17.1 | 37.9 | 54.3 | 90.7 | 19.2 | 40.1 | 62.3 | 112 | 20.0 | 42.1 | 63.9 | 121.2 |
| | 406 | 8.3 | 22.4 | 34.2 | 59.9 | 13.2 | 34.0 | 50.4 | 86.8 | 15.2 | 36.2 | 58.1 | 107 | 16.0 | 38.2 | 59.8 | 116.5 |
| | 610 | 1.8 | 16.3 | 28.1 | 53.8 | 5.7 | 26.3 | 42.8 | 79.0 | 7.4 | 28.6 | 49.8 | 98 | 8.2 | 30.5 | 51.7 | 107.2 |
| 3.60 | 305 | 8.8 | 22.8 | 34.6 | 60.2 | 13.9 | 34.4 | 50.8 | 87.0 | 15.7 | 36.3 | 58.0 | 106 | 16.5 | 38.2 | 59.5 | 114.9 |
| | 406 | 4.7 | 18.9 | 30.7 | 56.3 | 9.1 | 29.5 | 45.8 | 82.0 | 10.8 | 31.5 | 52.7 | 100 | 11.6 | 33.3 | 54.3 | 108.9 |
| | 610 | | 11.4[4] | 23.1 | 48.5 | | 20.0 | 36.3 | 72.1 | 1.4 | 22.1 | 42.4 | 89.0 | 2.2 | 23.9 | 44.2 | 97.2 |
| 4.00 | 305 | 5.8 | 19.8 | 31.5 | 57.0 | 10.3 | 30.4 | 46.7 | 82.7 | 12.0 | 32.1 | 53.0 | 99.8 | 12.8 | 33.9 | 54.4 | 108 |
| | 406 | 1.0[3] | 15.1 | 26.7 | 52.1 | 4.6[4] | 24.5 | 40.7 | 76.4 | 6.1 | 26.3 | 46.6 | 92.7 | 7.0 | 28.0 | 48.2 | 100 |
| | 610 | | 6.2[3] | 17.6[4] | 42.6 | | 13.3[3] | 29.2 | 64.3 | | 15.3[4] | 34.4 | 79.0 | | 16.9[4] | 36.2 | 86.3 |
| 4.40 | 305 | 2.7[3] | 16.6 | 28.1 | 53.3 | 6.5[4] | 25.7 | 41.7 | 77.7 | 8.0 | 27.5 | 47.3 | 91.9 | 8.8 | 29.3 | 49.0 | 99.4 |
| | 406 | | 11.1[3] | 22.4[4] | 47.4 | 0.1[3] | 18.9[4] | 34.7 | 70.1 | 1.4[3] | 20.8[4] | 39.9 | 83.5 | 2.2[4] | 22.5 | 41.7 | 90.8 |
| | 610 | | 0.8[3] | 11.9[3] | 36.2[4] | | 6.4[3] | 21.6[3] | 55.9 | | 8.4[3] | 26.0[4] | 67.8 | | 9.8[3] | 27.9[4] | 74.6 |
| 4.80 | 305 | | 13.1[3] | 24.4 | 49.2 | 2.7[3] | 20.9[4] | 36.1 | 70.7 | 4.1[4] | 22.7 | 41.3 | 83.4 | 4.8[4] | 24.4 | 43.2 | 90.6 |
| | 406 | | 6.9[3] | 17.9[3] | 42.3 | | 13.4[3] | 28.2[4] | 62.1 | | 15.3[3] | 33.0[4] | 73.9 | | 16.9[3] | 34.9 | 80.9 |
| | 610 | | | 6.1[3] | 29.5[3] | | | 13.8[3] | 46.1[3] | | 1.6[3] | 17.7[3] | 56.3[4] | | 2.9[3] | 19.7[3] | 62.7 |
| 5.20 | 305 | | 9.6[3] | 20.5[3] | 44.7 | | 16.0[3] | 30.4[4] | 63.0 | 0.2[3] | 18.0[3] | 35.2 | 74.5 | 0.9[3] | 19.6[4] | 37.3 | 81.5 |
| | 406 | | 2.7[2] | 13.3[3] | 36.9[3] | | 8.0[3] | 21.8[3] | 53.5[4] | | 9.9[3] | 26.1[3] | 64.0 | | 11.3[3] | 28.2[3] | 70.7 |
| | 610 | | | 0.3[2] | 22.6[3] | | | 6.5[2] | 36.3[3] | | | 9.7[3] | 45.1[3] | | | 11.7[3] | 51.0[3] |
| 5.60 | 305 | | 6.0[2] | 16.6[3] | 40.0[4] | | 11.4[3] | 24.7[3] | 55.2 | | 13.3[3] | 29.2[3] | 65.6 | | 14.8[3] | 31.4[4] | 72.4 |
| | 406 | | | 8.7[2] | 31.3[3] | | 3.0[2] | 15.7[3] | 45.0[3] | | 4.8[2] | 19.5[3] | 54.4[4] | | 6.0[3] | 21.7[3] | 60.7[4] |
| | 610 | | | | 15.7[2] | | | | 26.9[3] | | | 2.4[2] | 34.4[3] | | | 4.1[2] | 39.8[3] |
| 6.00 | 305 | | 2.6[2] | 12.6[3] | 35.1[3] | | 7.1[2] | 19.4[3] | 47.6[3] | | 9.0[3] | 23.5[3] | 56.8[4] | | 10.3[3] | 25.7[3] | 63.4 |
| | 406 | | | 4.2[2] | 25.7[3] | | | 10.1[2] | 36.9[3] | | | 13.4[3] | 45.2[3] | | 1.0[2] | 15.4[3] | 51.1[3] |
| | 610 | | | | 9.1[2] | | | | 18.3[2] | | | | 24.6[2] | | | | 29.3[3] |

[1] Deflection meets L/120 [3] Deflection meets L/360

[2] Deflection meets L/240 [4] Deflection meets L/600

If no note, deflection meets L/720

Bailey Metal Products, Dass Metal Products, DCM Metal Corp., EB Métal Inc., Imperial Building Products, Manugypse, Groupe UP, Trebor Building Products Ltd.

# Floor Joist Load Tables

## Table Notes

1 Loads are assumed to be uniformly distributed over entire span(s).

2 Load values are based on continuous support of the compression flange over the full length of the joist and the tension flange is laterally braced at a maximum spacing of 2.44 m.

3 Joists must be braced against rotation at all supports.

4 End shear and web crippling resistances are not reduced for punchouts.

5 End web crippling check is based on a 89 mm bearing length. Where allowable spans are followed by (*), web stiffeners are required at end supports.

6 Web stiffeners are required at interior supports.

**Bridging Recommendations**

Bracing components shall be designed based on Section C2 of S136-16 with the minimum required number of rows as shown below. Additional bridging rows may be required by design.

| Span(m) | Minimum Number of Rows |
|---|---|
| up to 4.88 | 1 at mid span |
| 4.88 to 7.32 | 2 at 1/3 point |
| 7.32 to 9.75 | 3 at 1/4 point |
| 9.75 to 12.2 | 4 at 1/5 point |

Bailey Metal Products, Dass Metal Products, DCM Metal Corp., EB Métal Inc., Imperial Building Products, Manugypse, Groupe UP, Trebor Building Products Ltd.

# FLOOR JOIST LOAD TABLE

## Uniformly Distributed Single Span Loads (kPa) with $K_\varphi = 0$

**Strength - Factored Loads** | **L/360 - Specified Loads**

| Span (m) | Section / Design Criteria | 600S162-43 | | | 600S162-54 | | | 600S162-68 | | | 600S162-97 | | | 600S200-43 | | | 600S200-54 | | | 600S200-68 | | | 600S200-97 | | |
|---|---|---|---|---|---|---|---|---|---|---|---|---|---|---|---|---|---|---|---|---|---|---|---|---|---|
| | | Spacing (mm) | | | Spacing (mm) | | | Spacing (mm) | | | Spacing (mm) | | | Spacing (mm) | | | Spacing (mm) | | | Spacing (mm) | | | Spacing (mm) | | |
| | | 305 | 406 | 610 | 305 | 406 | 610 | 305 | 406 | 610 | 305 | 406 | 610 | 305 | 406 | 610 | 305 | 406 | 610 | 305 | 406 | 610 | 305 | 406 | 610 |
| 2.40 | Strength | 10.0* | 7.5* | 5.0* | 17.8* | 13.4* | 8.9* | | 18.0* | 12.0* | | | 18.4 | 11.5* | 8.6* | 5.7* | 20.3* | 15.3* | 10.2* | | 20.6* | 13.7* | | | 21.3* |
| | L/360 | 9.9 | 7.4 | 5.0 | 12.2 | 9.2 | 6.1 | | 11.3 | 7.5 | | | 10.3 | 11.5 | 8.6 | 5.7 | 14.2 | 10.7 | 7.1 | | 13.2 | 8.8 | | | 12.0 |
| 2.80 | Strength | 7.4 | 5.5 | 3.7 | 13.1* | 9.8* | 6.5* | 17.7 | 13.2 | 8.8 | | 20.3 | 13.5 | 8.4* | 6.3* | 4.2* | 14.9* | 11.2* | 7.5* | 20.2* | 15.1* | 10.1* | | 23.4 | 15.6 |
| | L/360 | 6.2 | 4.7 | 3.1 | 7.70 | 5.8 | 3.9 | 9.5 | 7.1 | 4.7 | | 9.7 | 6.5 | 7.2 | 5.4 | 3.6 | 8.9 | 6.7 | 4.5 | 11.0 | 8.3 | 5.5 | | 11.3 | 7.6 |
| 3.20 | Strength | 5.6 | 4.2 | 2.8 | 10.0 | 7.5 | 5.0 | 13.5 | 10.1 | 6.8 | 20.7 | 15.5 | 10.3 | 6.5 | 4.8 | 3.2 | 11.4* | 8.6* | 5.7* | 15.4 | 11.6 | 7.7 | 23.9 | 17.9 | 12.0 |
| | L/360 | 4.2 | 3.1 | 2.1 | 5.2 | 3.9 | 2.6 | 6.4 | 4.8 | 3.2 | 8.7 | 6.5 | 4.3 | 4.8 | 3.6 | 2.4 | 6.0 | 4.5 | 3.0 | 7.4 | 5.6 | 3.7 | 10.1 | 7.6 | 5.1 |
| 3.60 | Strength | 4.5 | 3.3 | 2.2 | 7.9 | 5.9 | 4.0 | 10.7 | 8.0 | 5.3 | 16.3 | 12.3 | 8.2 | 5.1 | 3.8 | 2.6 | 9.0 | 6.8 | 4.5 | 12.2 | 9.1 | 6.1 | 18.9 | 14.2 | 9.5 |
| | L/360 | 2.9 | 2.2 | 1.5 | 3.6 | 2.7 | 1.8 | 4.5 | 3.4 | 2.2 | 6.1 | 4.6 | 3.0 | 3.4 | 2.6 | 1.7 | 4.2 | 3.2 | 2.1 | 5.2 | 3.9 | 2.6 | 7.1 | 5.3 | 3.6 |
| 4.00 | Strength | 3.6 | 2.7 | 1.8 | 6.4 | 4.8 | 3.2 | 8.7 | 6.5 | 4.3 | 13.2 | 9.9 | 6.6 | 4.1 | 3.1 | 2.1 | 7.3 | 5.5 | 3.7 | 9.9 | 7.4 | 4.9 | 15.3 | 11.5 | 7.7 |
| | L/360 | 2.1 | 1.6 | 1.1 | 2.6 | 2.0 | 1.3 | 3.3 | 2.4 | 1.6 | 4.4 | 3.3 | 2.2 | 2.5 | 1.9 | 1.2 | 3.1 | 2.3 | 1.5 | 3.8 | 2.8 | 1.9 | 5.2 | 3.9 | 2.6 |
| 4.40 | Strength | 3.0 | 2.2 | 1.5 | 5.3 | 4.0 | 2.6 | 7.2 | 5.4 | 3.6 | 10.9 | 8.2 | 5.5 | 3.4 | 2.6 | 1.7 | 6.1 | 4.5 | 3.0 | 8.2 | 6.1 | 4.1 | 12.7 | 9.5 | 6.3 |
| | L/360 | 1.6 | 1.2 | 0.8 | 2.0 | 1.5 | 1.0 | 2.4 | 1.8 | 1.2 | 3.3 | 2.5 | 1.7 | 1.9 | 1.4 | 0.9 | 2.3 | 1.7 | 1.2 | 2.8 | 2.1 | 1.4 | 3.9 | 2.9 | 1.9 |
| 4.80 | Strength | 2.5 | 1.9 | 1.3 | 4.5 | 3.3 | 2.2 | 6.0 | 4.5 | 3.0 | 9.2 | 6.9 | 4.6 | 2.9 | 2.2 | 1.4 | 5.1 | 3.8 | 2.5 | 6.9 | 5.1 | 3.4 | 10.6 | 8.0 | 5.3 |
| | L/360 | 1.2 | 0.9 | 0.6 | 1.5 | 1.1 | 0.8 | 1.9 | 1.4 | 0.9 | 2.6 | 1.9 | 1.3 | 1.4 | 1.1 | 0.7 | 1.8 | 1.3 | 0.9 | 2.2 | 1.6 | 1.1 | 3.0 | 2.3 | 1.5 |
| 5.20 | Strength | 2.1 | 1.6 | 1.1 | 3.8 | 2.8 | 1.9 | 5.1 | 3.8 | 2.6 | 7.8 | 5.9 | 3.9 | 2.4 | 1.8 | 1.2 | 4.3 | 3.2 | 2.2 | 5.8 | 4.4 | 2.9 | 9.1 | 6.8 | 4.5 |
| | L/360 | 1.0 | 0.7 | 0.5 | 1.2 | 0.9 | 0.6 | 1.5 | 1.1 | 0.7 | 2.0 | 1.5 | 1.0 | 1.1 | 0.8 | 0.6 | 1.4 | 1.0 | 0.7 | 1.7 | 1.3 | 0.9 | 2.4 | 1.8 | 1.2 |
| 5.60 | Strength | 1.8 | 1.4 | | 3.3 | 2.5 | 1.6 | 4.4 | 3.3 | 2.2 | 6.8 | 5.1 | 3.4 | 2.1 | 1.6 | | 3.7 | 2.8 | 1.9 | 5.0 | 3.8 | 2.5 | 7.8 | 5.9 | 3.9 |
| | L/360 | 0.8 | 0.6 | | 1.0 | 0.7 | 0.5 | 1.2 | 0.9 | 0.6 | 1.6 | 1.2 | 0.8 | 0.9 | 0.7 | | 1.1 | 0.8 | 0.6 | 1.4 | 1.0 | 0.7 | 1.9 | 1.4 | 0.9 |
| 6.00 | Strength | 1.6 | | | 2.9 | 2.1 | | 3.8 | 2.9 | 1.9 | 5.9 | 4.4 | 2.9 | 1.8 | 1.4 | | 3.3 | 2.4 | | 4.4 | 3.3 | 2.2 | 6.8 | 5.1 | 3.4 |
| | L/360 | 0.6 | | | 0.8 | 0.6 | | 1.0 | 0.7 | 0.5 | 1.3 | 1.0 | 0.7 | 0.7 | 0.6 | | 0.9 | 0.7 | | 1.1 | 0.8 | 0.6 | 1.5 | 1.2 | 0.8 |
| 6.40 | Strength | 1.4 | | | 2.5 | 1.9 | | 3.4 | 2.5 | | 5.2 | 3.9 | 2.6 | 1.6 | | | 2.9 | 2.1 | | 3.9 | 2.9 | | 6.0 | 4.5 | 3.0 |
| | L/360 | 0.5 | | | 0.6 | 0.5 | | 0.8 | 0.6 | | 1.1 | 0.8 | 0.5 | 0.6 | | | 0.7 | 0.6 | | 0.9 | 0.7 | | 1.3 | 0.9 | 0.6 |
| 6.80 | Strength | | | | 2.2 | | | 3.0 | 2.2 | | 4.6 | 3.4 | | 1.4 | | | 2.5 | | | 3.4 | 2.6 | | 5.3 | 4.0 | 2.6 |
| | L/360 | | | | 0.5 | | | 0.7 | 0.5 | | 0.9 | 0.7 | | 0.5 | | | 0.6 | | | 0.8 | 0.6 | | 1.1 | 0.8 | 0.5 |
| 7.20 | Strength | | | | | | | 2.7 | | | 4.1 | 3.1 | | | | | 2.3 | | | 3.0 | 2.3 | | 4.7 | 3.5 | |
| | L/360 | | | | | | | 0.6 | | | 0.8 | 0.6 | | | | | 0.5 | | | 0.6 | 0.5 | | 0.9 | 0.7 | |
| 7.60 | Strength | | | | | | | | | | 3.7 | 2.7 | | | | | | | | 2.7 | | | 4.2 | 3.2 | |
| | L/360 | | | | | | | | | | 0.6 | 0.5 | | | | | | | | 0.6 | | | 0.8 | 0.6 | |
| 8.00 | Strength | | | | | | | | | | 3.3 | | | | | | | | | | | | 3.8 | 2.9 | |
| | L/360 | | | | | | | | | | 0.6 | | | | | | | | | | | | 0.6 | 0.5 | |
| 8.40 | Strength | | | | | | | | | | | | | | | | | | | | | | 3.5 | | |
| | L/360 | | | | | | | | | | | | | | | | | | | | | | 0.6 | | |
| 8.80 | Strength | | | | | | | | | | | | | | | | | | | | | | 3.2 | | |
| | L/360 | | | | | | | | | | | | | | | | | | | | | | 0.5 | | |
| 9.20 | Strength | | | | | | | | | | | | | | | | | | | | | | | | |
| | L/360 | | | | | | | | | | | | | | | | | | | | | | | | |

**NOTES:**

* Web stiffeners required at ends of members.

1) Values greater than 24 kPa and less than 0.5 kPa are not shown.

2) For other deflection limits such as L/480, multiply the L/360 uniform specified loads by the following factor:

| Deflection limit | Factor |
|---|---|
| L/480 | 360/480 = 0.75 |

Bailey Metal Products, Dass Metal Products, DCM Metal Corp., EB Metal Inc., Imperial Building Products, Manugypse, Groupe UP, Trebor Building Products Ltd.

# FLOOR JOIST LOAD TABLE

## Uniformly Distributed Single Span Loads (kPa) with $K_\varphi = 0$

**Strength - Factored Loads** | **L/360 - Specified Loads**

| Span (m) | Section / Design Criteria | 600S250-43 | | | 600S250-54 | | | 600S250-68 | | | 600S250-97 | | | 600S300-43 | | | 600S300-54 | | | 600S300-68 | | | 600S300-97 | | |
|---|---|---|---|---|---|---|---|---|---|---|---|---|---|---|---|---|---|---|---|---|---|---|---|---|---|
| | | Spacing (mm) | | | Spacing (mm) | | | Spacing (mm) | | | Spacing (mm) | | | Spacing (mm) | | | Spacing (mm) | | | Spacing (mm) | | | Spacing (mm) | | |
| | | 305 | 406 | 610 | 305 | 406 | 610 | 305 | 406 | 610 | 305 | 406 | 610 | 305 | 406 | 610 | 305 | 406 | 610 | 305 | 406 | 610 | 305 | 406 | 610 |
| 2.40 | Strength | 12.2* | 9.1* | 6.1* | 21.4* | 16.0* | 10.7* | | 21.7* | 14.5* | | | 22.8* | 12.6* | 9.4* | 6.3* | 22.1* | 16.6* | 11.0* | | 22.6* | 15.1* | | | |
| | L/360 | 13.1 | 9.8 | 6.5 | 15.7 | 11.7 | 7.8 | | 15.0 | 10.0 | | | 13.9 | 14.1 | 10.6 | 7.1 | 16.8 | 12.6 | 8.4 | | 16.2 | 10.8 | | | |
| 2.80 | Strength | 8.9* | 6.7* | 4.5* | 15.7* | 11.8* | 7.8* | 21.3* | 16.0* | 10.6* | | | 16.8 | 9.2* | 6.9* | 4.6* | 16.2* | 12.2* | 8.1* | 22.1* | 16.6* | 11.1* | | | 17.6* |
| | L/360 | 8.2 | 6.2 | 4.1 | 9.9 | 7.4 | 4.9 | 12.6 | 9.4 | 6.3 | | | 8.8 | 8.9 | 6.7 | 4.4 | 10.6 | 8.0 | 5.3 | 13.6 | 10.2 | 6.8 | | | 9.8 |
| 3.20 | Strength | 6.8 | 5.1 | 3.4 | 12.0* | 9.0* | 6.0* | 16.3 | 12.2 | 8.2 | | 19.3 | 12.8 | 7.1 | 5.3 | 3.5 | 12.4* | 9.3* | 6.2* | 16.9* | 12.7* | 8.5* | | 20.2 | 13.5 |
| | L/360 | 5.5 | 4.1 | 2.8 | 6.6 | 5.0 | 3.3 | 8.4 | 6.3 | 4.2 | | 8.8 | 5.9 | 6.0 | 4.5 | 3.0 | 7.1 | 5.3 | 3.6 | 9.1 | 6.9 | 4.6 | | 9.8 | 6.5 |
| 3.60 | Strength | 5.4 | 4.1 | 2.7 | 9.5 | 7.1 | 4.7 | 12.9 | 9.7 | 6.4 | 20.3 | 15.2 | 10.1 | 5.6 | 4.2 | 2.8 | 9.8* | 7.4* | 4.9* | 13.4 | 1.0 | 6.7 | 21.3 | 16.0 | 10.7 |
| | L/360 | 3.9 | 2.9 | 1.9 | 4.6 | 3.5 | 2.3 | 5.9 | 4.4 | 3.0 | 8.2 | 6.2 | 4.1 | 4.2 | 3.1 | 2.1 | 5.0 | 3.7 | 2.5 | 6.4 | 4.8 | 3.2 | 9.2 | 6.9 | 4.6 |
| 4.00 | Strength | 4.4 | 3.3 | 2.2 | 7.7 | 5.8 | 3.8 | 10.4 | 7.8 | 5.2 | 16.4 | 12.3 | 8.2 | 4.5 | 3.4 | 2.3 | 8.0 | 6.0 | 4.0 | 10.8 | 8.1 | 5.4 | 17.3 | 13.0 | 8.6 |
| | L/360 | 2.8 | 2.1 | 1.4 | 3.4 | 2.5 | 1.7 | 4.3 | 3.2 | 2.2 | 6.0 | 4.5 | 3.0 | 3.0 | 2.3 | 1.5 | 3.6 | 2.7 | 1.8 | 4.7 | 3.5 | 2.3 | 6.7 | 5.0 | 3.4 |
| 4.40 | Strength | 3.6 | 2.7 | 1.8 | 6.4 | 4.8 | 3.2 | 8.6 | 6.5 | 4.3 | 13.6 | 10.2 | 6.8 | 3.7 | 2.8 | 1.9 | 6.6 | 4.9 | 3.3 | 9.0 | 6.7 | 4.5 | 14.3 | 10.7 | 7.1 |
| | L/360 | 2.1 | 1.6 | 1.1 | 2.5 | 1.9 | 1.3 | 3.2 | 2.4 | 1.6 | 4.5 | 3.4 | 2.3 | 2.3 | 1.7 | 1.1 | 2.7 | 2.1 | 1.4 | 3.5 | 2.6 | 1.8 | 5.0 | 3.8 | 2.5 |
| 4.80 | Strength | 3.0 | 2.3 | 1.5 | 5.3 | 4.0 | 2.7 | 7.2 | 5.4 | 3.6 | 11.4 | 8.6 | 5.7 | 3.1 | 2.4 | 1.6 | 5.5 | 4.1 | 2.8 | 7.5 | 5.6 | 3.8 | 12.0 | 9.0 | 6.0 |
| | L/360 | 1.6 | 1.2 | 0.8 | 2.0 | 1.5 | 1.0 | 2.5 | 1.9 | 1.2 | 3.5 | 2.6 | 1.7 | 1.8 | 1.3 | 0.9 | 2.1 | 1.6 | 1.1 | 2.7 | 2.0 | 1.4 | 3.9 | 2.9 | 1.9 |
| 5.20 | Strength | 2.6 | 1.9 | 1.3 | 4.6 | 3.4 | 2.3 | 6.2 | 4.6 | 3.1 | 9.7 | 7.3 | 4.9 | 2.7 | 2.0 | 1.3 | 4.7 | 3.5 | 2.4 | 6.4 | 4.8 | 3.2 | 10.2 | 7.7 | 5.1 |
| | L/360 | 1.3 | 1.0 | 0.6 | 1.5 | 1.2 | 0.8 | 2.0 | 1.5 | 1.0 | 2.7 | 2.0 | 1.4 | 1.4 | 1.0 | 0.7 | 1.7 | 1.2 | 0.8 | 2.1 | 1.6 | 1.1 | 3.0 | 2.3 | 1.5 |
| 5.60 | Strength | 2.2 | 1.7 | 1.1 | 3.9 | 2.9 | 2.0 | 5.3 | 4.0 | 2.7 | 8.4 | 6.3 | 4.2 | 2.3 | 1.7 | 1.2 | 4.1 | 3.0 | 2.0 | 5.5 | 4.1 | 2.8 | 8.8 | 6.6 | 4.4 |
| | L/360 | 1.0 | 0.8 | 0.5 | 1.2 | 0.9 | 0.6 | 1.6 | 1.2 | 0.8 | 2.2 | 1.6 | 1.1 | 1.1 | 0.8 | 0.6 | 1.3 | 1.0 | 0.7 | 1.7 | 1.3 | 0.9 | 2.4 | 1.8 | 1.2 |
| 6.00 | Strength | 1.9 | 1.5 | | 3.4 | 2.6 | 1.7 | 4.6 | 3.5 | 2.3 | 7.3 | 5.5 | 3.7 | 2.0 | 1.5 | | 3.5 | 2.7 | 1.8 | 4.8 | 3.6 | 2.4 | 7.7 | 5.8 | 3.8 |
| | L/360 | 0.8 | 0.6 | | 1.0 | 0.8 | 0.5 | 1.3 | 1.0 | 0.6 | 1.8 | 1.3 | 0.9 | 0.9 | 0.7 | | 1.1 | 0.8 | 0.5 | 1.4 | 1.0 | 0.7 | 2.0 | 1.5 | 1.0 |
| 6.40 | Strength | 1.7 | 1.3 | | 3.0 | 2.3 | | 4.1 | 3.1 | 2.0 | 6.4 | 4.8 | 3.2 | 1.8 | 1.3 | | 3.1 | 2.3 | | 4.2 | 3.2 | 2.1 | 6.7 | 5.1 | 3.4 |
| | L/360 | 0.7 | 0.5 | | 0.8 | 0.6 | | 1.1 | 0.8 | 0.5 | 1.5 | 1.1 | 0.7 | 0.7 | 0.6 | | 0.9 | 0.7 | | 1.1 | 0.9 | 0.6 | 1.6 | 1.2 | 0.8 |
| 6.80 | Strength | 1.5 | | | 2.7 | 2.0 | | 3.6 | 2.7 | | 5.7 | 4.3 | 2.8 | 1.6 | | | 2.8 | 2.1 | | 3.8 | 2.8 | | 6.0 | 4.5 | 3.0 |
| | L/360 | 0.6 | | | 0.7 | 0.5 | | 0.9 | 0.7 | | 1.2 | 0.9 | 0.6 | 0.6 | | | 0.7 | 0.6 | | 1.0 | 0.7 | | 1.4 | 1.0 | 0.7 |
| 7.20 | Strength | 1.4 | | | 2.4 | | | 3.2 | 2.4 | | 5.1 | 3.8 | 2.5 | 1.4 | | | 2.5 | | | 3.3 | 2.5 | | 5.3 | 4.0 | 2.7 |
| | L/360 | 0.5 | | | 0.6 | | | 0.7 | 0.6 | | 1.0 | 0.8 | 0.5 | 0.5 | | | 0.6 | | | 0.8 | 0.6 | | 1.1 | 0.9 | 0.6 |
| 7.60 | Strength | | | | 2.1 | | | 2.9 | | | 4.6 | 3.4 | | | | | 2.2 | | | 3.0 | 2.3 | | 4.8 | 3.6 | 2.4 |
| | L/360 | | | | 0.5 | | | 0.6 | | | 0.9 | 0.7 | | | | | 0.5 | | | 0.7 | 0.5 | | 1.0 | 0.7 | 0.5 |
| 8.00 | Strength | | | | | | | 2.6 | | | 4.1 | 3.1 | | | | | | | | 2.7 | | | 4.3 | 3.2 | |
| | L/360 | | | | | | | 0.5 | | | 0.8 | 0.6 | | | | | | | | 0.6 | | | 0.8 | 0.6 | |
| 8.40 | Strength | | | | | | | | | | 3.7 | 2.8 | | | | | | | | 2.5 | | | 3.9 | 2.9 | |
| | L/360 | | | | | | | | | | 0.6 | 0.5 | | | | | | | | 0.5 | | | 0.7 | 0.5 | |
| 8.80 | Strength | | | | | | | | | | 3.4 | | | | | | | | | | | | 3.6 | | |
| | L/360 | | | | | | | | | | 0.6 | | | | | | | | | | | | 0.6 | | |
| 9.20 | Strength | | | | | | | | | | 3.1 | | | | | | | | | | | | 3.3 | | |
| | L/360 | | | | | | | | | | 0.5 | | | | | | | | | | | | 0.6 | | |

**NOTES:**

* Web stiffeners required at ends of members.

1) Values greater than 24 kPa and less than 0.5 kPa are not shown.

2) For other deflection limits such as L/480, multiply the L/360 uniform specified loads by the following factor:

| Deflection limit | Factor |
|---|---|
| L/480 | 360/480 = 0.75 |

Bailey Metal Products, Dass Metal Products, DCM Metal Corp., EB Metal Inc., Imperial Building Products, Manugypse, Groupe UP, Trebor Building Products Ltd.

# FLOOR JOIST LOAD TABLE

## Uniformly Distributed Single Span Loads (kPa) with $K_\varphi = 0$

**Strength - Factored Loads** | **L/360 - Specified Loads**

| Span (m) | Section / Design Criteria | 800S250-43 | | | 800S250-54 | | | 800S250-68 | | | 800S250-97 | | | 800S300-43 | | | 800S300-54 | | | 800S300-68 | | | 800S300-97 | | |
|---|---|---|---|---|---|---|---|---|---|---|---|---|---|---|---|---|---|---|---|---|---|---|---|---|---|
| | | Spacing (mm) | | | Spacing (mm) | | | Spacing (mm) | | | Spacing (mm) | | | Spacing (mm) | | | Spacing (mm) | | | Spacing (mm) | | | Spacing (mm) | | |
| | | 305 | 406 | 610 | 305 | 406 | 610 | 305 | 406 | 610 | 305 | 406 | 610 | 305 | 406 | 610 | 305 | 406 | 610 | 305 | 406 | 610 | 305 | 406 | 610 |
| 2.40 | Strength | | 12.2* | 8.2* | | 21.9* | 14.6* | | | 20.0* | | | | | 12.2* | 8.2* | | | 15.0* | | | 20.7* | | | |
| | L/360 | | 19.2 | 12.8 | | 23.0 | 15.3 | | | 19.6 | | | | | 20.5 | 13.7 | | | 16.4 | | | 21.0 | | | |
| 2.80 | Strength | 12.1* | 9.1* | 6.1* | 21.4* | 16.1* | 10.7* | | 22.0* | 14.7* | | | 23.6* | 12.5* | 9.4* | 6.2* | 22.1* | 16.5* | 11.0* | | 22.8* | 15.2* | | | |
| | L/360 | 16.1 | 12.1 | 8.1 | 19.3 | 14.5 | 9.7 | | 18.5 | 12.3 | | | 17.2 | 17.2 | 12.9 | 8.6 | 20.6 | 15.5 | 10.3 | | 19.9 | 13.3 | | | |
| 3.20 | Strength | 9.3* | 7.0* | 4.6* | 16.4* | 12.3* | 8.2* | 22.5* | 16.9* | 11.3* | | | 18.1* | 9.6* | 7.2* | 4.8* | 16.9* | 12.7* | 8.4* | 23.3* | 17.4* | 11.6* | | | 18.8* |
| | L/360 | 10.8 | 8.1 | 5.4 | 12.9 | 9.7 | 6.5 | 16.5 | 12.4 | 8.2 | | | 11.5 | 11.5 | 8.7 | 5.8 | 13.8 | 10.4 | 6.9 | 17.8 | 13.3 | 8.9 | | | 12.7 |
| 3.60 | Strength | 7.3* | 5.5* | 3.7* | 13.0* | 9.7* | 6.5* | 17.8* | 13.3* | 8.9* | | 21.5* | 14.3* | 7.6* | 5.7* | 3.8* | 13.3* | 10.0* | 6.7* | 18.4* | 13.8* | 9.2* | | 22.3* | 14.9* |
| | L/360 | 7.6 | 5.7 | 3.8 | 9.1 | 6.8 | 4.5 | 11.6 | 8.7 | 5.8 | | 12.2 | 8.1 | 8.1 | 6.1 | 4.1 | 9.7 | 7.3 | 4.9 | 12.5 | 9.4 | 6.2 | | 13.4 | 8.9 |
| 4.00 | Strength | 5.9* | 4.5* | 3.0* | 10.5* | 7.9* | 5.3* | 14.4* | 10.8* | 7.2* | 23.2 | 17.4 | 11.6 | 6.1* | 4.6* | 3.1* | 10.8* | 8.1* | 5.4* | 14.9* | 11.2* | 7.4* | | 18.1* | 12.0* |
| | L/360 | 5.5 | 4.1 | 2.8 | 6.6 | 5.0 | 3.3 | 8.4 | 6.3 | 4.2 | 11.8 | 8.9 | 5.9 | 5.9 | 4.4 | 3.0 | 7.1 | 5.3 | 3.5 | 9.1 | 6.8 | 4.5 | | 9.8 | 6.5 |
| 4.40 | Strength | 4.9 | 3.7 | 2.5 | 8.7* | 6.5* | 4.3* | 11.9* | 8.9* | 6.0* | 19.1 | 14.4 | 9.6 | 5.1* | 3.8* | 2.5* | 8.9* | 6.7* | 4.5* | 12.3* | 9.2* | 6.1* | 19.9 | 14.9 | 10.0 |
| | L/360 | 4.1 | 3.1 | 2.1 | 5.0 | 3.7 | 2.5 | 6.3 | 4.8 | 3.2 | 8.9 | 6.7 | 4.4 | 4.4 | 3.3 | 2.2 | 5.3 | 4.0 | 2.7 | 6.8 | 5.1 | 3.4 | 9.8 | 7.4 | 4.9 |
| 4.80 | Strength | 4.1 | 3.1 | 2.1 | 7.3* | 5.5* | 3.6* | 1.0 | 7.5 | 5.0 | 16.1 | 12.1 | 8.0 | 4.2 | 3.2 | 2.1 | 7.5* | 5.6* | 3.8* | 10.3 | 7.8 | 5.2 | 16.7 | 12.5 | 8.4 |
| | L/360 | 3.2 | 2.4 | 1.6 | 3.8 | 2.9 | 1.9 | 4.9 | 3.7 | 2.4 | 6.8 | 5.1 | 3.4 | 3.4 | 2.6 | 1.7 | 4.1 | 3.1 | 2.0 | 5.3 | 3.9 | 2.6 | 7.6 | 5.7 | 3.8 |
| 5.20 | Strength | 3.5 | 2.6 | 1.8 | 6.2 | 4.7 | 3.1 | 8.5 | 6.4 | 4.3 | 13.7 | 10.3 | 6.9 | 3.6 | 2.7 | 1.8 | 6.4 | 4.8 | 3.2 | 8.8 | 6.6 | 4.4 | 14.3 | 10.7 | 7.1 |
| | L/360 | 2.5 | 1.9 | 1.3 | 3.0 | 2.3 | 1.5 | 3.8 | 2.9 | 1.9 | 5.4 | 4.0 | 2.7 | 2.7 | 2.0 | 1.3 | 3.2 | 2.4 | 1.6 | 4.1 | 3.1 | 2.1 | 5.9 | 4.5 | 3.0 |
| 5.60 | Strength | 3.0 | 2.3 | 1.5 | 5.4 | 4.0 | 2.7 | 7.3 | 5.5 | 3.7 | 11.8 | 8.9 | 5.9 | 3.1 | 2.3 | 1.6 | 5.5 | 4.1 | 2.8 | 7.6 | 5.7 | 3.8 | 12.3 | 9.2 | 6.1 |
| | L/360 | 2.0 | 1.5 | 1.0 | 2.4 | 1.8 | 1.2 | 3.1 | 2.3 | 1.5 | 4.3 | 3.2 | 2.2 | 2.2 | 1.6 | 1.1 | 2.6 | 1.9 | 1.3 | 3.3 | 2.5 | 1.7 | 4.8 | 3.6 | 2.4 |
| 6.00 | Strength | 2.6 | 2.0 | 1.3 | 4.7 | 3.5 | 2.3 | 6.4 | 4.8 | 3.2 | 10.3 | 7.7 | 5.1 | 2.7 | 2.0 | 1.4 | 4.8 | 3.6 | 2.4 | 6.6 | 5.0 | 3.3 | 10.7 | 8.0 | 5.4 |
| | L/360 | 1.6 | 1.2 | 0.8 | 2.0 | 1.5 | 1.0 | 2.5 | 1.9 | 1.3 | 3.5 | 2.6 | 1.8 | 1.8 | 1.3 | 0.9 | 2.1 | 1.6 | 1.0 | 2.7 | 2.0 | 1.3 | 3.9 | 2.9 | 1.9 |
| 6.40 | Strength | 2.3 | 1.7 | 1.2 | 4.1 | 3.1 | 2.1 | 5.6 | 4.2 | 2.8 | 9.1 | 6.8 | 4.5 | 2.4 | 1.8 | 1.2 | 4.2 | 3.2 | 2.1 | 5.8 | 4.4 | 2.9 | 9.4 | 7.1 | 4.7 |
| | L/360 | 1.3 | 1.0 | 0.7 | 1.6 | 1.2 | 0.8 | 2.1 | 1.5 | 1.0 | 2.9 | 2.2 | 1.4 | 1.4 | 1.1 | 0.7 | 1.7 | 1.3 | 0.9 | 2.2 | 1.7 | 1.1 | 3.2 | 2.4 | 1.6 |
| 6.80 | Strength | 2.1 | 1.5 | 1.0 | 3.6 | 2.7 | 1.8 | 5.0 | 3.7 | 2.5 | 8.0 | 6.0 | 4.0 | 2.1 | 1.6 | 1.1 | 3.7 | 2.8 | 1.9 | 5.1 | 3.9 | 2.6 | 8.3 | 6.3 | 4.2 |
| | L/360 | 1.1 | 0.8 | 0.6 | 1.3 | 1.0 | 0.7 | 1.7 | 1.3 | 0.9 | 2.4 | 1.8 | 1.2 | 1.2 | 0.9 | 0.6 | 1.4 | 1.1 | 0.7 | 1.9 | 1.4 | 0.9 | 2.7 | 2.0 | 1.3 |
| 7.20 | Strength | 1.8 | 1.4 | | 3.2 | 2.4 | 1.6 | 4.4 | 3.3 | 2.2 | 7.2 | 5.4 | 3.6 | 1.9 | 1.4 | 0.9 | 3.3 | 2.5 | 1.7 | 4.6 | 3.4 | 2.3 | 7.4 | 5.6 | 3.7 |
| | L/360 | 0.9 | 0.7 | | 1.1 | 0.9 | 0.6 | 1.4 | 1.1 | 0.7 | 2.0 | 1.5 | 1.0 | 1.0 | 0.8 | 0.5 | 1.2 | 0.9 | 0.6 | 1.6 | 1.2 | 0.8 | 2.2 | 1.7 | 1.1 |
| 7.60 | Strength | 1.6 | 1.2 | | 2.9 | 2.2 | 1.5 | 4.0 | 3.0 | 2.0 | 6.4 | 4.8 | 3.2 | 1.7 | 1.3 | | 3.0 | 2.2 | 1.5 | 4.1 | 3.1 | 2.1 | 6.7 | 5.0 | 3.3 |
| | L/360 | 0.8 | 0.6 | | 1.0 | 0.7 | 0.5 | 1.2 | 0.9 | 0.6 | 1.7 | 1.3 | 0.9 | 0.9 | 0.6 | | 1.0 | 0.8 | 0.5 | 1.3 | 1.0 | 0.7 | 1.9 | 1.4 | 1.0 |
| 8.00 | Strength | 1.5 | 1.1 | | 2.6 | 2.0 | | 3.6 | 2.7 | 1.8 | 5.8 | 4.3 | 2.9 | 1.5 | 1.1 | | 2.7 | 2.0 | | 3.7 | 2.8 | 1.9 | 6.0 | 4.5 | 3.0 |
| | L/360 | 0.7 | 0.5 | | 0.8 | 0.6 | | 1.1 | 0.8 | 0.5 | 1.5 | 1.1 | 0.7 | 0.7 | 0.6 | | 0.9 | 0.7 | | 1.1 | 0.9 | 0.6 | 1.6 | 1.2 | 0.8 |
| 8.40 | Strength | 1.3 | | | 2.4 | 1.8 | | 3.3 | 2.4 | | 5.3 | 3.9 | 2.6 | 1.4 | | | 2.5 | 1.8 | | 3.4 | 2.5 | 1.7 | 5.5 | 4.1 | 2.7 |
| | L/360 | 0.6 | | | 0.7 | 0.5 | | 0.9 | 0.7 | | 1.3 | 1.0 | 0.6 | 0.6 | | | 0.8 | 0.6 | | 1.0 | 0.7 | 0.5 | 1.4 | 1.1 | 0.7 |
| 8.80 | Strength | 1.2 | | | 2.2 | | | 3.0 | 2.2 | | 4.8 | 3.6 | 2.4 | 1.3 | | | 2.2 | 1.7 | | 3.1 | 2.3 | | 5.0 | 3.7 | 2.5 |
| | L/360 | 0.5 | | | 0.6 | | | 0.8 | 0.6 | | 1.1 | 0.8 | 0.6 | 0.6 | | | 0.7 | 0.5 | | 0.9 | 0.6 | | 1.2 | 0.9 | 0.6 |
| 9.20 | Strength | | | | 2.0 | | | 2.7 | 2.0 | | 4.4 | 3.3 | 2.2 | 1.2 | | | 2.0 | | | 2.8 | 2.1 | | 4.6 | 3.4 | 2.3 |
| | L/360 | | | | 0.5 | | | 0.7 | 0.5 | | 1.0 | 0.7 | 0.5 | 0.5 | | | 0.6 | | | 0.7 | 0.6 | | 1.1 | 0.8 | 0.5 |

**NOTES:**

* Web stiffeners required at ends of members.

1) Values greater than 24 kPa and less than 0.5 kPa are not shown.

2) For other deflection limits such as L/480, multiply the L/360 uniform specified loads by the following factor:

| Deflection limit | Factor |
|---|---|
| L/480 | 360/480 = 0.75 |

Bailey Metal Products, Dass Metal Products, DCM Metal Corp., EB Metal Inc., Imperial Building Products, Manugypse, Groupe UP, Trebor Building Products Ltd.

# FLOOR JOIST LOAD TABLE
## Uniformly Distributed Single Span Loads (kPa) with $K_\varphi = 0$

**Strength - Factored Loads** | **L/360 - Specified Loads**

| Span (m) | Section / Design Criteria | 1000S162-54 Spacing (mm) 305 | 406 | 610 | 1000S162-68 Spacing (mm) 305 | 406 | 610 | 1000S162-97 Spacing (mm) 305 | 406 | 610 | 1000S200-54 Spacing (mm) 305 | 406 | 610 | 1000S200-68 Spacing (mm) 305 | 406 | 610 | 1000S200-97 Spacing (mm) 305 | 406 | 610 |
|---|---|---|---|---|---|---|---|---|---|---|---|---|---|---|---|---|---|---|---|
| 3.20 | Strength | 16.9* | 12.6* | 8.4* | 23.4* | 17.6* | 11.7* | | | 19.1* | 19.3* | 14.5* | 9.7* | | 20.3* | 13.5* | | | 21.9* |
| | L/360 | 16.8 | 12.6 | 8.4 | 21.5 | 16.1 | 10.8 | | | 15.3 | 19.2 | 14.4 | 9.6 | | 18.4 | 12.3 | | | 17.4 |
| 3.60 | Strength | 13.3* | 10.0* | 6.7* | 18.5* | 13.9* | 9.3* | | 22.7* | 15.1* | 15.5* | 11.6* | 7.7* | 21.4* | 16.0* | 10.7* | | | 17.3* |
| | L/360 | 11.8 | 8.9 | 5.9 | 15.1 | 11.3 | 7.6 | | 16.1 | 10.8 | 13.5 | 10.1 | 6.7 | 17.2 | 12.9 | 8.6 | | | 12.3 |
| 4.00 | Strength | 10.8* | 8.1* | 5.4* | 15.0* | 11.2* | 7.5* | | 18.3* | 12.2* | 12.5* | 9.4* | 6.3* | 17.3* | 13.0* | 8.7* | | 21.0* | 14.0* |
| | L/360 | 8.6 | 6.5 | 4.3 | 11.0 | 8.3 | 5.5 | | 11.8 | 7.8 | 9.8 | 7.4 | 4.9 | 12.6 | 9.4 | 6.3 | | 13.4 | 8.9 |
| 4.40 | Strength | 8.9* | 6.7* | 4.5* | 12.4* | 9.3* | 6.2* | 20.2 | 15.2 | 10.1 | 10.4* | 7.8* | 5.2* | 14.3* | 10.7* | 7.2* | 23.1 | *17.3* | 11.6* |
| | L/360 | 6.5 | 4.8 | 3.2 | 8.3 | 6.2 | 4.1 | 11.8 | 8.8 | 5.9 | 7.4 | 5.5 | 3.7 | 9.4 | 7.1 | 4.7 | 13.4 | 10.1 | 6.7 |
| 4.80 | Strength | 7.5* | 5.6* | 3.7* | 10.4* | 7.8* | 5.2* | 17 | 12.7 | 8.5 | 8.7* | 6.5* | 4.4* | 12.0* | 9.0* | 6.0* | 19.4 | *14.6* | 9.7* |
| | L/360 | 5.0 | 3.7 | 2.5 | 6.4 | 4.8 | 3.2 | 9.1 | 6.8 | 4.5 | 5.7 | 4.3 | 2.8 | 7.3 | 5.5 | 3.6 | 10.3 | 7.8 | 5.2 |
| 5.20 | Strength | 6.4* | 4.8* | 3.2* | 8.9 | 6.7 | 4.4 | 14.5 | 10.9 | 7.2 | 7.4* | 5.6* | 3.7* | 10.3* | 7.7* | 5.1* | 16.6 | 12.4 | 8.3 |
| | L/360 | 3.9 | 2.9 | 2.0 | 5.0 | 3.8 | 2.5 | 7.1 | 5.4 | 3.6 | 4.5 | 3.4 | 2.2 | 5.7 | 4.3 | 2.9 | 8.1 | 6.1 | 4.1 |
| 5.60 | Strength | 5.5 | 4.1 | 2.8 | 7.6 | 5.7 | 3.8 | 12.5 | 9.4 | 6.2 | 6.4* | 4.8* | 3.2* | 8.8* | 6.6* | 4.4* | 14.3 | 10.7 | 7.1 |
| | L/360 | 3.1 | 2.4 | 1.6 | 4.0 | 3.0 | 2.0 | 5.7 | 4.3 | 2.9 | 3.6 | 2.7 | 1.8 | 4.6 | 3.4 | 2.3 | 6.5 | 4.9 | 3.3 |
| 6.00 | Strength | 4.8 | 3.6 | 2.4 | 6.7 | 5.0 | 3.3 | 10.9 | 8.2 | 5.4 | 5.6* | 4.2* | 2.8* | 7.7 | 5.8 | 3.9 | 12.4 | 9.3 | 6.2 |
| | L/360 | 2.5 | 1.9 | 1.3 | 3.3 | 2.4 | 1.6 | 4.6 | 3.5 | 2.3 | 2.9 | 2.2 | 1.5 | 3.7 | 2.8 | 1.9 | 5.3 | 4.0 | 2.6 |
| 6.40 | Strength | 4.2 | 3.2 | 2.1 | 5.9 | 4.4 | 2.9 | 9.6 | 7.2 | 4.8 | 4.9 | 3.7 | 2.5 | 6.8 | 5.1 | 3.4 | 10.9 | 8.2 | 5.5 |
| | L/360 | 2.1 | 1.6 | 1.1 | 2.7 | 2.0 | 1.3 | 3.8 | 2.9 | 1.9 | 2.4 | 1.8 | 1.2 | 3.1 | 2.3 | 1.5 | 4.4 | 3.3 | 2.2 |
| 6.80 | Strength | 3.7 | 2.8 | 1.9 | 5.2 | 3.9 | 2.6 | 8.5 | 6.3 | 4.2 | 4.3 | 3.3 | 2.2 | 6.0 | 4.5 | 3.0 | 9.7 | 7.3 | 4.8 |
| | L/360 | 1.8 | 1.3 | 0.9 | 2.2 | 1.7 | 1.1 | 3.2 | 2.4 | 1.6 | 2.0 | 1.5 | 1.0 | 2.6 | 1.9 | 1.3 | 3.6 | 2.7 | 1.8 |
| 7.20 | Strength | 3.3 | 2.5 | 1.7 | 4.6 | 3.5 | 2.3 | 7.6 | 5.7 | 3.8 | 3.9 | 2.9 | 1.9 | 5.3 | 4.0 | 2.7 | 8.6 | 6.5 | 4.3 |
| | L/360 | 1.5 | 1.1 | 0.7 | 1.9 | 1.4 | 0.9 | 2.7 | 2.0 | 1.3 | 1.7 | 1.3 | 0.8 | 2.2 | 1.6 | 1.1 | 3.1 | 2.3 | 1.5 |
| 7.60 | Strength | 3.0 | 2.2 | 1.5 | 4.2 | 3.1 | 2.1 | 6.8 | 5.1 | 3.4 | 3.5 | 2.6 | 1.7 | 4.8 | 3.6 | 2.4 | 7.8 | 5.8 | 3.9 |
| | L/360 | 1.3 | 0.9 | 0.6 | 1.6 | 1.2 | 0.8 | 2.3 | 1.7 | 1.1 | 1.4 | 1.1 | 0.7 | 1.8 | 1.4 | 0.9 | 2.6 | 2.0 | 1.3 |
| 8.00 | Strength | 2.7 | 2.0 | 1.3 | 3.7 | 2.8 | 1.9 | 6.1 | 4.6 | 3.1 | 3.1 | 2.4 | 1.6 | 4.3 | 3.2 | 2.2 | 7.0 | 5.2 | 3.5 |
| | L/360 | 1.1 | 0.8 | 0.5 | 1.4 | 1.0 | 0.7 | 2.0 | 1.5 | 1.0 | 1.2 | 0.9 | 0.6 | 1.6 | 1.2 | 0.8 | 2.2 | 1.7 | 1.1 |
| 8.40 | Strength | 2.4 | 1.8 | | 3.4 | 2.6 | 1.7 | 5.5 | 4.2 | 2.8 | 2.8 | 2.1 | 1.4 | 3.9 | 2.9 | 2.0 | 6.3 | 4.8 | 3.2 |
| | L/360 | 0.9 | 0.7 | | 1.2 | 0.9 | 0.6 | 1.7 | 1.3 | 0.8 | 1.1 | 0.8 | 0.5 | 1.4 | 1.0 | 0.7 | 1.9 | 1.4 | 1.0 |
| 8.80 | Strength | 2.2 | 1.7 | | 3.1 | 2.3 | 1.5 | 5.1 | 3.8 | 2.5 | 2.6 | 1.9 | | 3.6 | 2.7 | 1.8 | 5.8 | 4.3 | 2.9 |
| | L/360 | 0.8 | 0.6 | | 1.0 | 0.8 | 0.5 | 1.5 | 1.1 | 0.7 | 0.9 | 0.7 | | 1.2 | 0.9 | 0.6 | 1.7 | 1.3 | 0.8 |
| 9.20 | Strength | 2.0 | 1.5 | | 2.8 | 2.1 | | 4.6 | 3.5 | 2.3 | 2.4 | 1.8 | | 3.3 | 2.5 | 1.6 | 5.3 | 4.0 | 2.6 |
| | L/360 | 0.7 | 0.5 | | 0.9 | 0.7 | | 1.3 | 1.0 | 0.6 | 0.8 | 0.6 | | 1.0 | 0.8 | 0.5 | 1.5 | 1.1 | 0.7 |
| 9.60 | Strength | 1.9 | | | 2.6 | 2.0 | | 4.2 | 3.2 | 2.1 | 2.2 | 1.6 | | 3.0 | 2.3 | | 4.9 | 3.6 | 2.4 |
| | L/360 | 0.6 | | | 0.8 | 0.6 | | 1.1 | 0.9 | 0.6 | 0.7 | 0.5 | | 0.9 | 0.7 | | 1.3 | 1.0 | 0.6 |
| 10.0 | Strength | 1.7 | | | 2.4 | 1.8 | | 3.9 | 2.9 | 2.0 | 2.0 | | | 2.8 | 2.1 | | 4.5 | 3.4 | 2.2 |
| | L/360 | 0.6 | | | 0.7 | 0.5 | | 1.0 | 0.8 | 0.5 | 0.6 | | | 0.8 | 0.6 | | 1.1 | 0.9 | 0.6 |

**NOTES:**

* Web stiffeners required at ends of members.

1) Values greater than 24 kPa and less than 0.5 kPa are not shown.

2) For other deflection limits such as L/480, multiply the L/360 uniform specified loads by the following factor:

| Deflection limit | Factor |
|---|---|
| L/480 | 360/480 = 0.75 |

Bailey Metal Products, Dass Metal Products, DCM Metal Corp., EB Metal Inc., Imperial Building Products, Manugypse, Groupe UP, Trebor Building Products Ltd.

# FLOOR JOIST LOAD TABLE

## Uniformly Distributed Single Span Loads (kPa) with $K_\varphi = 0$

**Strength - Factored Loads** | **L/360 - Specified Loads**

| | Section | 1000S250-54 | | | 1000S250-68 | | | 1000S250-97 | | | 1000S300-54 | | | 1000S300-68 | | | 1000S300-97 | | |
|---|---|---|---|---|---|---|---|---|---|---|---|---|---|---|---|---|---|---|---|
| Span | Design | Spacing (mm) | | | Spacing (mm) | | | Spacing (mm) | | | Spacing (mm) | | | Spacing (mm) | | | Spacing (mm) | | |
| (m) | Criteria | 305 | 406 | 610 | 305 | 406 | 610 | 305 | 406 | 610 | 305 | 406 | 610 | 305 | 406 | 610 | 305 | 406 | 610 |
| 3.20 | Strength | 19.3* | 14.5* | 9.7* | | 21.5* | 14.3* | | | 23.3* | 19.3* | 14.5* | 9.7* | | 22.2* | 14.8* | | | |
| | L/360 | 22 | 16.5 | 11.0 | | 21.0 | 14.0 | | | 19.7 | 23.1 | 17.3 | 11.6 | | 22.5 | 15.0 | | | |
| 3.60 | Strength | 16.4* | 12.3* | 8.2* | 22.6* | 17.0* | 11.3* | | | 18.4* | 16.8* | 12.6* | 8.4* | 23.3* | 17.5* | 11.7* | | | 19.1* |
| | L/360 | 15.5 | 11.6 | 7.7 | 19.7 | 14.8 | 9.9 | | | 13.8 | 16.2 | 12.2 | 8.1 | 21.1 | 15.8 | 10.5 | | | 15.1 |
| 4.00 | Strength | 13.3* | 9.9* | 6.6* | 18.3* | 13.7* | 9.2* | | 22.4* | 14.9* | 13.6* | 10.2* | 6.8* | 18.9* | 14.2* | 9.5* | | 23.2* | 15.5* |
| | L/360 | 11.3 | 8.5 | 5.6 | 14.4 | 10.8 | 7.2 | | 15.1 | 10.1 | 11.8 | 8.9 | 5.9 | 15.4 | 11.5 | 7.7 | | 16.6 | 11.0 |
| 4.40 | Strength | 11.0* | 8.2* | 5.5* | 15.1* | 11.3* | 7.6* | | 18.5* | 12.3* | 11.3* | 8.5* | 5.6* | 15.6* | 11.7* | 7.8* | | 19.2* | 12.8* |
| | L/360 | 8.5 | 6.4 | 4.2 | 10.8 | 8.1 | 5.4 | | 11.4 | 7.6 | 8.9 | 6.7 | 4.4 | 11.6 | 8.7 | 5.8 | | 12.4 | 8.3 |
| 4.80 | Strength | 9.2* | 6.9* | 4.6* | 12.7* | 9.5* | 6.4* | 20.7* | 15.5* | 10.4* | 9.5* | 7.1* | 4.7* | 13.1* | 9.8* | 6.6* | 21.5* | 16.1* | 10.7* |
| | L/360 | 6.5 | 4.9 | 3.3 | 8.3 | 6.2 | 4.2 | 11.7 | 8.8 | 5.8 | 6.9 | 5.1 | 3.4 | 8.9 | 6.7 | 4.4 | 12.8 | 9.6 | 6.4 |
| 5.20 | Strength | 7.8* | 5.9* | 3.9* | 10.8* | 8.1* | 5.4* | 17.7 | 13.2 | 8.8 | 8.1* | 6.1* | 4.0* | 11.2* | 8.4* | 5.6* | 18.3* | 13.7* | 9.2* |
| | L/360 | 5.1 | 3.8 | 2.6 | 6.5 | 4.9 | 3.3 | 9.2 | 6.9 | 4.6 | 5.4 | 4.0 | 2.7 | 7.0 | 5.2 | 3.5 | 10.1 | 7.5 | 5.0 |
| 5.60 | Strength | 6.8* | 5.1* | 3.4* | 9.3* | 7.0* | 4.7* | 15.2 | 11.4 | 7.6 | 7.0* | 5.2* | 3.5* | 9.6* | 7.2* | 4.8* | 15.8 | 11.8 | 7.9 |
| | L/360 | 4.1 | 3.1 | 2.1 | 5.2 | 3.9 | 2.6 | 7.4 | 5.5 | 3.7 | 4.3 | 3.2 | 2.2 | 5.6 | 4.2 | 2.8 | 8.0 | 6.0 | 4.0 |
| 6.00 | Strength | 5.9* | 4.4* | 2.9* | 8.1 | 6.1 | 4.1 | 13.3 | 9.9 | 6.6 | 6.1* | 4.5* | 3.0* | 8.4* | 6.3* | 4.2* | 13.8 | 10.3 | 6.9 |
| | L/360 | 3.3 | 2.5 | 1.7 | 4.3 | 3.2 | 2.1 | 6 | 4.5 | 3.0 | 3.5 | 2.6 | 1.8 | 4.6 | 3.4 | 2.3 | 6.5 | 4.9 | 3.3 |
| 6.40 | Strength | 5.2* | 3.9* | 2.6* | 7.2 | 5.4 | 3.6 | 11.7 | 8.7 | 5.8 | 5.3* | 4.0* | 2.7* | 7.4 | 5.5 | 3.7 | 12.1 | 9.1 | 6.0 |
| | L/360 | 2.8 | 2.1 | 1.4 | 3.5 | 2.6 | 1.8 | 4.9 | 3.7 | 2.5 | 2.9 | 2.2 | 1.4 | 3.8 | 2.8 | 1.9 | 5.4 | 4.0 | 2.7 |
| 6.80 | Strength | 4.6 | 3.4 | 2.3 | 6.3 | 4.8 | 3.2 | 10.3 | 7.7 | 5.2 | 4.7 | 3.5 | 2.4 | 6.5 | 4.9 | 3.3 | 10.7 | 8.0 | 5.4 |
| | L/360 | 2.3 | 1.7 | 1.1 | 2.9 | 2.2 | 1.5 | 4.1 | 3.1 | 2.1 | 2.4 | 1.8 | 1.2 | 3.1 | 2.3 | 1.6 | 4.5 | 3.4 | 2.2 |
| 7.20 | Strength | 4.1 | 3.1 | 2.0 | 5.7 | 4.2 | 2.8 | 9.2 | 6.9 | 4.6 | 4.2 | 3.2 | 2.1 | 5.8 | 4.4 | 2.9 | 9.6 | 7.2 | 4.8 |
| | L/360 | 1.9 | 1.4 | 1.0 | 2.5 | 1.8 | 1.2 | 3.5 | 2.6 | 1.7 | 2.0 | 1.5 | 1.0 | 2.6 | 2.0 | 1.3 | 3.8 | 2.8 | 1.9 |
| 7.60 | Strength | 3.7 | 2.8 | 1.8 | 5.1 | 3.8 | 2.5 | 8.3 | 6.2 | 4.1 | 3.8 | 2.8 | 1.9 | 5.2 | 3.9 | 2.6 | 8.6 | 6.4 | 4.3 |
| | L/360 | 1.6 | 1.2 | 0.8 | 2.1 | 1.6 | 1.0 | 2.9 | 2.2 | 1.5 | 1.7 | 1.3 | 0.9 | 2.2 | 1.7 | 1.1 | 3.2 | 2.4 | 1.6 |
| 8.00 | Strength | 3.3 | 2.5 | 1.7 | 4.6 | 3.4 | 2.3 | 7.5 | 5.6 | 3.7 | 3.4 | 2.6 | 1.7 | 4.7 | 3.5 | 2.4 | 7.7 | 5.8 | 3.9 |
| | L/360 | 1.4 | 1.1 | 0.7 | 1.8 | 1.3 | 0.9 | 2.5 | 1.9 | 1.3 | 1.5 | 1.1 | 0.7 | 1.9 | 1.4 | 1.0 | 2.8 | 2.1 | 1.4 |
| 8.40 | Strength | 3.0 | 2.3 | 1.5 | 4.2 | 3.1 | 2.1 | 6.8 | 5.1 | 3.4 | 3.1 | 2.3 | 1.5 | 4.3 | 3.2 | 2.1 | 7.0 | 5.3 | 3.5 |
| | L/360 | 1.2 | 0.9 | 0.6 | 1.6 | 1.2 | 0.8 | 2.2 | 1.6 | 1.1 | 1.3 | 1.0 | 0.6 | 1.7 | 1.2 | 0.8 | 2.4 | 1.8 | 1.2 |
| 8.80 | Strength | 2.7 | 2.1 | 1.4 | 3.8 | 2.8 | 1.9 | 6.2 | 4.6 | 3.1 | 2.8 | 2.1 | 1.4 | 3.9 | 2.9 | 2.0 | 6.4 | 4.8 | 3.2 |
| | L/360 | 1.1 | 0.8 | 0.5 | 1.3 | 1.0 | 0.7 | 1.9 | 1.4 | 0.9 | 1.1 | 0.8 | 0.6 | 1.4 | 1.1 | 0.7 | 2.1 | 1.6 | 1.0 |
| 9.20 | Strength | 2.5 | 1.9 | | 3.5 | 2.6 | 1.7 | 5.6 | 4.2 | 2.8 | 2.6 | 1.9 | 1.3 | 3.6 | 2.7 | 1.8 | 5.9 | 4.4 | 2.9 |
| | L/360 | 0.9 | 0.7 | | 1.2 | 0.9 | 0.6 | 1.7 | 1.2 | 0.8 | 1.0 | 0.7 | 0.5 | 1.3 | 0.9 | 0.6 | 1.8 | 1.4 | 0.9 |
| 9.60 | Strength | 2.3 | 1.7 | | 3.2 | 2.4 | 1.6 | 5.2 | 3.9 | 2.6 | 2.4 | 1.8 | | 3.3 | 2.5 | 1.6 | 5.4 | 4.0 | 2.7 |
| | L/360 | 0.8 | 0.6 | | 1.0 | 0.8 | 0.5 | 1.5 | 1.1 | 0.7 | 0.9 | 0.6 | | 1.1 | 0.8 | 0.6 | 1.6 | 1.2 | 0.8 |
| 10.0 | Strength | 2.1 | 1.6 | | 2.9 | 2.2 | | 4.8 | 3.6 | 2.4 | 2.2 | 1.6 | | 3.0 | 2.3 | 1.5 | 5.0 | 3.7 | 2.5 |
| | L/360 | 0.7 | 0.5 | | 0.9 | 0.7 | | 1.3 | 1.0 | 0.6 | 0.8 | 0.6 | | 1.0 | 0.7 | 0.5 | 1.4 | 1.1 | 0.7 |

**NOTES:**

* Web stiffeners required at ends of members.

1) Values greater than 24 kPa and less than 0.5 kPa are not shown.

2) For other deflection limits such as L/480, multiply the L/360 uniform specified loads by the following factor:

| Deflection limit | Factor |
|---|---|
| L/480 | 360/480 = 0.75 |

Bailey Metal Products, Dass Metal Products, DCM Metal Corp., EB Metal Inc., Imperial Building Products, Manugypse, Groupe UP, Trebor Building Products Ltd.

# FLOOR JOIST LOAD TABLE

## Uniformly Distributed Single Span Loads (kPa) with $K_\varphi = 0$

**Strength - Factored Loads** | **L/360 - Specified Loads**

| Span (m) | Section / Design Criteria | 1200S162-68 Spacing (mm) 305 | 406 | 610 | 1200S162-97 Spacing (mm) 305 | 406 | 610 | 1200S200-68 Spacing (mm) 305 | 406 | 610 | 1200S200-97 Spacing (mm) 305 | 406 | 610 | 1200S250-68 Spacing (mm) 305 | 406 | 610 | 1200S250-97 Spacing (mm) 305 | 406 | 610 | 1200S300-68 Spacing (mm) 305 | 406 | 610 | 1200S300-97 Spacing (mm) 305 | 406 | 610 |
|---|---|---|---|---|---|---|---|---|---|---|---|---|---|---|---|---|---|---|---|---|---|---|---|---|---|
| 4.00 | Strength | 17.6* | 13.2* | 8.8* | | 22.1* | 14.7* | 20.6* | 15.4* | 10.3* | | | 17.1* | 22.1* | 16.5* | 11.0* | | | 18.2* | 22.8* | 17.1* | 11.4* | | | 19.0* |
| | L/360 | 16.9 | 12.7 | 8.4 | | 18.4 | 12.3 | 19.1 | 14.4 | 9.6 | | | 13.9 | 21.2 | 15.9 | 10.6 | | | 15.6 | 23.8 | 17.8 | 11.9 | | | 17.1 |
| 4.40 | Strength | 14.6* | 10.9* | 7.3* | | 18.3* | 12.2* | 17.0* | 12.8* | 8.5* | | 21.1* | 14.1* | 18.2* | 13.7* | 9.1* | | 22.5* | 15.0* | 18.8* | 14.1* | 9.4* | | 23.5* | 15.7* |
| | L/360 | 12.7 | 9.5 | 6.3 | | 13.9 | 9.2 | 14.4 | 10.8 | 7.2 | | 15.7 | 10.4 | 15.9 | 11.9 | 7.9 | | 17.5 | 11.7 | 17.9 | 13.4 | 8.9 | | 19.3 | 12.8 |
| 4.80 | Strength | 12.3* | 9.2* | 6.1* | 20.5* | 15.3* | 10.2* | 14.3* | 10.7* | 7.1* | 23.7* | 17.8* | 11.8* | 15.3* | 11.5* | 7.7* | | 18.9* | 12.6* | 15.8* | 11.9* | 7.9* | | 19.8* | 13.2* |
| | L/360 | 9.8 | 7.3 | 4.9 | 14.2 | 10.7 | 7.1 | 11.1 | 8.3 | 5.5 | 16.1 | 12.1 | 8.0 | 12.2 | 9.2 | 6.1 | | 13.5 | 9.0 | 13.8 | 10.3 | 6.9 | | 14.8 | 9.9 |
| 5.20 | Strength | 10.4* | 7.8* | 5.2* | 17.4* | 13.1* | 8.7* | 12.2* | 9.1* | 6.1* | 20.2* | 15.1* | 10.1* | 13.1* | 9.8* | 6.5* | 21.5* | 16.1* | 10.7* | 13.5* | 10.1* | 6.7* | 22.5* | 16.9* | 11.2* |
| | L/360 | 7.7 | 5.8 | 3.8 | 11.2 | 8.4 | 5.6 | 8.7 | 6.5 | 4.4 | 12.6 | 9.5 | 6.3 | 9.6 | 7.2 | 4.8 | 14.2 | 10.6 | 7.1 | 10.8 | 8.1 | 5.4 | 15.6 | 11.7 | 7.8 |
| 5.60 | Strength | 9.0* | 6.8* | 4.5* | 15 | 11.3 | 7.5 | 10.5* | 7.9* | 5.2* | 17.4* | 13.0* | 8.7* | 11.3* | 8.4* | 5.6* | 18.5* | 13.9* | 9.3* | 11.6* | 8.7* | 5.8* | 19.4* | 14.5* | 9.7* |
| | L/360 | 6.1 | 4.6 | 3.1 | 9.0 | 6.7 | 4.5 | 7.0 | 5.2 | 3.5 | 10.1 | 7.6 | 5.1 | 7.7 | 5.8 | 3.9 | 11.3 | 8.5 | 5.7 | 8.7 | 6.5 | 4.3 | 12.5 | 9.3 | 6.2 |
| 6.00 | Strength | 7.8 | 5.9 | 3.9 | 13.1 | 9.8 | 6.5 | 9.1* | 6.9* | 4.6* | 15.2* | 11.4* | 7.6* | 9.8* | 7.4* | 4.9* | 16.1* | 12.1* | 8.1* | 10.1* | 7.6* | 5.1* | 16.9* | 12.7* | 8.4* |
| | L/360 | 5.0 | 3.7 | 2.5 | 7.3 | 5.5 | 3.6 | 5.7 | 4.3 | 2.8 | 8.2 | 6.2 | 4.1 | 6.3 | 4.7 | 3.1 | 9.2 | 6.9 | 4.6 | 7.0 | 5.3 | 3.5 | 10.1 | 7.6 | 5.1 |
| 6.40 | Strength | 6.9 | 5.2 | 3.4 | 11.5 | 8.6 | 5.8 | 8.0* | 6.0* | 4.0* | 13.3 | 10 | 6.7 | 8.6* | 6.5* | 4.3* | 14.2* | 10.6* | 7.1* | 8.9* | 6.7* | 4.5* | 14.8* | 11.1* | 7.4* |
| | L/360 | 4.1 | 3.1 | 2.1 | 6.0 | 4.5 | 3.0 | 4.7 | 3.5 | 2.3 | 6.8 | 5.1 | 3.4 | 5.2 | 3.9 | 2.6 | 7.6 | 5.7 | 3.8 | 5.8 | 4.4 | 2.9 | 8.3 | 6.3 | 4.2 |
| 6.80 | Strength | 6.1 | 4.6 | 3.1 | 10.2 | 7.6 | 5.1 | 7.1* | 5.3* | 3.6* | 11.8 | 8.8 | 5.9 | 7.6* | 5.7* | 3.8* | 12.6 | 9.4 | 6.3 | 7.9* | 5.9* | 3.9* | 13.1 | 9.9 | 6.6 |
| | L/360 | 3.4 | 2.6 | 1.7 | 5.0 | 3.8 | 2.5 | 3.9 | 2.9 | 1.9 | 5.7 | 4.2 | 2.8 | 4.3 | 3.2 | 2.2 | 6.3 | 4.7 | 3.2 | 4.8 | 3.6 | 2.4 | 7.0 | 5.2 | 3.5 |
| 7.20 | Strength | 5.4 | 4.1 | 2.7 | 9.1 | 6.8 | 4.5 | 6.3 | 4.8 | 3.2 | 10.5 | 7.9 | 5.3 | 6.8* | 5.1* | 3.4* | 11.2 | 8.4 | 5.6 | 7.0* | 5.3* | 3.5* | 11.7 | 8.8 | 5.9 |
| | L/360 | 2.9 | 2.2 | 1.4 | 4.2 | 3.2 | 2.1 | 3.3 | 2.5 | 1.6 | 4.8 | 3.6 | 2.4 | 3.6 | 2.7 | 1.8 | 5.3 | 4.0 | 2.7 | 4.1 | 3.1 | 2.0 | 5.9 | 4.4 | 2.9 |
| 7.60 | Strength | 4.9 | 3.7 | 2.4 | 8.2 | 6.1 | 4.1 | 5.7 | 4.3 | 2.8 | 9.4 | 7.1 | 4.7 | 6.1 | 4.6 | 3.1 | 10.1 | 7.5 | 5.0 | 6.3* | 4.7* | 3.2* | 10.5 | 7.9 | 5.3 |
| | L/360 | 2.5 | 1.8 | 1.2 | 3.6 | 2.7 | 1.8 | 2.8 | 2.1 | 1.4 | 4.1 | 3.0 | 2.0 | 3.1 | 2.3 | 1.5 | 4.5 | 3.4 | 2.3 | 3.5 | 2.6 | 1.7 | 5.0 | 3.7 | 2.5 |
| 8.00 | Strength | 4.4 | 3.3 | 2.2 | 7.4 | 5.5 | 3.7 | 5.1 | 3.9 | 2.6 | 8.5 | 6.4 | 4.3 | 5.5 | 4.1 | 2.8 | 9.1 | 6.8 | 4.5 | 5.7 | 4.3 | 2.8 | 9.5 | 7.1 | 4.7 |
| | L/360 | 2.1 | 1.6 | 1.1 | 3.1 | 2.3 | 1.5 | 2.4 | 1.8 | 1.2 | 3.5 | 2.6 | 1.7 | 2.6 | 2.0 | 1.3 | 3.9 | 2.9 | 1.9 | 3.0 | 2.2 | 1.5 | 4.3 | 3.2 | 2.1 |
| 8.40 | Strength | 4.0 | 3.0 | 2.0 | 6.7 | 5.0 | 3.3 | 4.7 | 3.5 | 2.3 | 7.7 | 5.8 | 3.9 | 5.0 | 3.8 | 2.5 | 8.2 | 6.2 | 4.1 | 5.2 | 3.9 | 2.6 | 8.6 | 6.5 | 4.3 |
| | L/360 | 1.8 | 1.4 | 0.9 | 2.7 | 2.0 | 1.3 | 2.1 | 1.5 | 1.0 | 3.0 | 2.2 | 1.5 | 2.3 | 1.7 | 1.1 | 3.4 | 2.5 | 1.7 | 2.6 | 1.9 | 1.3 | 3.7 | 2.8 | 1.8 |
| 8.80 | Strength | 3.6 | 2.7 | 1.8 | 6.1 | 4.6 | 3.0 | 4.3 | 3.2 | 2.1 | 7.0 | 5.3 | 3.5 | 4.6 | 3.4 | 2.3 | 7.5 | 5.6 | 3.8 | 4.7 | 3.5 | 2.4 | 7.9 | 5.9 | 3.9 |
| | L/360 | 1.6 | 1.2 | 0.8 | 2.3 | 1.7 | 1.2 | 1.8 | 1.3 | 0.9 | 2.6 | 2.0 | 1.3 | 2.0 | 1.5 | 1.0 | 2.9 | 2.2 | 1.5 | 2.2 | 1.7 | 1.1 | 3.2 | 2.4 | 1.6 |
| 9.20 | Strength | 3.3 | 2.5 | 1.7 | 5.6 | 4.2 | 2.8 | 3.9 | 2.9 | 1.9 | 6.4 | 4.8 | 3.2 | 4.2 | 3.1 | 2.1 | 6.9 | 5.2 | 3.4 | 4.3 | 3.2 | 2.2 | 7.2 | 5.4 | 3.6 |
| | L/360 | 1.4 | 1.0 | 0.7 | 2.0 | 1.5 | 1.0 | 1.6 | 1.2 | 0.8 | 2.3 | 1.7 | 1.1 | 1.7 | 1.3 | 0.9 | 2.6 | 1.9 | 1.3 | 2.0 | 1.5 | 1.0 | 2.8 | 2.1 | 1.4 |
| 9.60 | Strength | 3.1 | 2.3 | 1.5 | 5.1 | 3.8 | 2.6 | 3.6 | 2.7 | 1.8 | 5.9 | 4.4 | 3.0 | 3.8 | 2.9 | 1.9 | 6.3 | 4.7 | 3.2 | 4.0 | 3.0 | 2.0 | 6.6 | 4.9 | 3.3 |
| | L/360 | 1.2 | 0.9 | 0.6 | 1.8 | 1.3 | 0.9 | 1.4 | 1.0 | 0.7 | 2.0 | 1.5 | 1.0 | 1.5 | 1.1 | 0.8 | 2.3 | 1.7 | 1.1 | 1.7 | 1.3 | 0.9 | 2.5 | 1.9 | 1.2 |
| 10.0 | Strength | 2.8 | 2.1 | 1.4 | 4.7 | 3.5 | 2.4 | 3.3 | 2.5 | 1.6 | 5.5 | 4.1 | 2.7 | 3.5 | 2.6 | 1.8 | 5.8 | 4.4 | 2.9 | 3.6 | 2.7 | 1.8 | 6.1 | 4.6 | 3.0 |
| | L/360 | 1.1 | 0.8 | 0.5 | 1.6 | 1.2 | 0.8 | 1.2 | 0.9 | 0.6 | 1.8 | 1.3 | 0.9 | 1.4 | 1.0 | 0.7 | 2.0 | 1.5 | 1.0 | 1.5 | 1.1 | 0.8 | 2.2 | 1.6 | 1.1 |
| 10.4 | Strength | 2.6 | 2.0 | 1.3 | 4.4 | 3.3 | 2.2 | 3.0 | 2.3 | 1.5 | 5.0 | 3.8 | 2.5 | 3.3 | 2.4 | 1.6 | 5.4 | 4.0 | 2.7 | 3.4 | 2.5 | 1.7 | 5.6 | 4.2 | 2.8 |
| | L/360 | 1.0 | 0.7 | 0.5 | 1.4 | 1.0 | 0.7 | 1.1 | 0.8 | 0.5 | 1.6 | 1.2 | 0.8 | 1.2 | 0.9 | 0.6 | 1.8 | 1.3 | 0.9 | 1.4 | 1.0 | 0.7 | 1.9 | 1.5 | 1.0 |
| 10.8 | Strength | 2.4 | 1.8 | | 4.0 | 3.0 | 2.0 | 2.8 | 2.1 | 1.4 | 4.7 | 3.5 | 2.3 | 3.0 | 2.3 | 1.5 | 5.0 | 3.7 | 2.5 | 3.1 | 2.3 | 1.6 | 5.2 | 3.9 | 2.6 |
| | L/360 | 0.9 | 0.6 | | 1.2 | 0.9 | 0.6 | 1.0 | 0.7 | 0.5 | 1.4 | 1.1 | 0.7 | 1.1 | 0.8 | 0.5 | 1.6 | 1.2 | 0.8 | 1.2 | 0.9 | 0.6 | 1.7 | 1.3 | 0.9 |
| 11.2 | Strength | 2.3 | 1.7 | | 3.8 | 2.8 | 1.9 | 2.6 | 2.0 | | 4.3 | 3.3 | 2.2 | 2.8 | 2.1 | 1.4 | 4.6 | 3.5 | 2.3 | 2.9 | 2.2 | 1.5 | 4.8 | 3.6 | 2.4 |
| | L/360 | 0.8 | 0.6 | | 1.1 | 0.8 | 0.6 | 0.9 | 0.7 | | 1.3 | 0.9 | 0.6 | 1.0 | 0.7 | 0.5 | 1.4 | 1.1 | 0.7 | 1.1 | 0.8 | 0.5 | 1.6 | 1.2 | 0.8 |
| 11.6 | Strength | 2.1 | 1.6 | | 3.5 | 2.6 | 1.8 | 2.4 | 1.8 | | 4.1 | 3.0 | 2.0 | 2.6 | 2.0 | | 4.3 | 3.2 | 2.2 | 2.7 | 2.0 | 1.4 | 4.5 | 3.4 | 2.3 |
| | L/360 | 0.7 | 0.5 | | 1.0 | 0.8 | 0.5 | 0.8 | 0.6 | | 1.1 | 0.9 | 0.6 | 0.9 | 0.7 | | 1.3 | 1.0 | 0.6 | 1.0 | 0.7 | 0.5 | 1.4 | 1.1 | 0.7 |

**NOTES:**

* Web stiffeners required at ends of members.

1) Values greater than 24 kPa and less than 0.5 kPa are not shown.

2) For other deflection limits such as L/480, multiply the L/360 uniform specified loads by the following factor:

| Deflection limit | Factor |
|---|---|
| L/480 | 360/480 = 0.75 |

Bailey Metal Products, Dass Metal Products, DCM Metal Corp., EB Metal Inc., Imperial Building Products, Manugypse, Groupe UP, Trebor Building Products Ltd.

## FLOOR JOIST LOAD TABLE

### Uniformly Distributed Single Span Loads (kPa) with $K_\varphi = 0$

**Strength - Factored Loads** | **L/360 - Specified Loads**

| Span (m) | Section / Design Criteria | 1400S162-68 Spacing (mm) 305 | 406 | 610 | 1400S162-97 Spacing (mm) 305 | 406 | 610 | 1400S200-68 Spacing (mm) 305 | 406 | 610 | 1400S200-97 Spacing (mm) 305 | 406 | 610 | 1400S250-68 Spacing (mm) 305 | 406 | 610 | 1400S250-97 Spacing (mm) 305 | 406 | 610 | 1400S300-68 Spacing (mm) 305 | 406 | 610 | 1400S300-97 Spacing (mm) 305 | 406 | 610 |
|---|---|---|---|---|---|---|---|---|---|---|---|---|---|---|---|---|---|---|---|---|---|---|---|---|---|
| 4.40 | Strength | 16.4* | 12.3* | 8.2* | | 21.0* | 14.0* | 19.5* | 14.6* | 9.7* | | | 16.3* | 20.0* | 15.0* | 10.0* | | | 17.5* | 20.0* | 15.0* | 10.0* | | | 18.4* |
| | L/360 | 18.1 | 13.6 | 9.1 | | 20.1 | 13.4 | 20.5 | 15.4 | 10.2 | | | 15.1 | 22.5 | 16.9 | 11.3 | | | 16.8 | 23.8 | 17.9 | 11.9 | | | 18.1 |
| 4.80 | Strength | 13.8* | 10.3* | 6.9* | 23.6* | 17.7* | 11.8* | 16.3* | 12.3* | 8.2* | | 20.6* | 13.7* | 17.6* | 13.2* | 8.8* | | 22.1* | 14.7* | 18.4* | 13.8* | 9.2* | | 23.2* | 15.4* |
| | L/360 | 14.0 | 10.5 | 7.0 | 20.6 | 15.5 | 10.3 | 15.8 | 11.8 | 7.9 | | 17.4 | 11.6 | 17.4 | 13.0 | 8.7 | | 19.4 | 12.9 | 18.3 | 13.8 | 9.2 | | 20.9 | 14.0 |
| 5.20 | Strength | 11.7* | 8.8* | 5.9* | 20.1* | 15.1* | 10.0* | 13.9* | 10.4* | 7.0* | 23.4* | 17.5* | 11.7* | 15.0* | 11.3* | 7.5* | | 18.8* | 12.6* | 15.7* | 11.8* | 7.8* | | 19.7* | 13.2* |
| | L/360 | 11.0 | 8.2 | 5.5 | 16.2 | 12.2 | 8.1 | 12.4 | 9.3 | 6.2 | 18.2 | 13.7 | 9.1 | 13.7 | 10.2 | 6.8 | | 15.2 | 10.2 | 14.4 | 10.8 | 7.2 | | 16.5 | 11 |
| 5.60 | Strength | 10.1* | 7.6* | 5.1* | 17.3* | 13.0* | 8.7* | 12.0* | 9.0* | 6.0* | 20.1* | 15.1* | 10.1* | 13.0* | 9.7* | 6.5* | 21.7* | 16.2* | 10.8* | 13.5* | 10.1* | 6.8* | 22.7* | 17.0* | 11.3* |
| | L/360 | 8.8 | 6.6 | 4.4 | 13.0 | 9.8 | 6.5 | 9.9 | 7.5 | 5.0 | 14.6 | 11.0 | 7.3 | 10.9 | 8.2 | 5.5 | 16.3 | 12.2 | 8.1 | 11.6 | 8.7 | 5.8 | 17.6 | 13.2 | 8.8 |
| 6.00 | Strength | 8.8* | 6.6* | 4.4* | 15.1* | 11.3* | 7.5* | 10.5* | 7.8* | 5.2* | 17.5* | 13.2* | 8.8* | 11.3* | 8.5* | 5.6* | 18.9* | 14.1* | 9.4* | 11.8* | 8.8* | 5.9* | 19.8* | 14.8* | 9.9* |
| | L/360 | 7.2 | 5.4 | 3.6 | 10.6 | 7.9 | 5.3 | 8.1 | 6.1 | 4.0 | 11.9 | 8.9 | 5.9 | 8.9 | 6.7 | 4.4 | 13.2 | 9.9 | 6.6 | 9.4 | 7.0 | 4.7 | 14.3 | 10.7 | 7.1 |
| 6.40 | Strength | 7.7* | 5.8* | 3.9* | 13.2 | 9.9 | 6.6 | 9.2* | 6.9* | 4.6* | 15.4* | 11.6* | 7.7* | 9.9* | 7.4* | 5.0* | 16.6* | 12.4* | 8.3* | 10.4* | 7.8* | 5.2* | 17.4* | 13.0* | 8.7* |
| | L/360 | 5.9 | 4.4 | 2.9 | 8.7 | 6.5 | 4.4 | 6.7 | 5.0 | 3.3 | 9.8 | 7.3 | 4.9 | 7.3 | 5.5 | 3.7 | 10.9 | 8.2 | 5.4 | 7.7 | 5.8 | 3.9 | 11.8 | 8.8 | 5.9 |
| 6.80 | Strength | 6.9* | 5.1* | 3.4* | 11.7 | 8.8 | 5.9 | 8.1* | 6.1* | 4.1* | 13.7* | 10.2* | 6.8* | 8.8* | 6.6* | 4.4* | 14.7* | 11.0* | 7.3* | 9.2* | 6.9* | 4.6* | 15.4* | 11.5* | 7.7* |
| | L/360 | 4.9 | 3.7 | 2.5 | 7.3 | 5.4 | 3.6 | 5.5 | 4.2 | 2.8 | 8.2 | 6.1 | 4.1 | 6.1 | 4.6 | 3.1 | 9.1 | 6.8 | 4.5 | 6.5 | 4.8 | 3.2 | 9.8 | 7.4 | 4.9 |
| 7.20 | Strength | 6.1 | 4.6 | 3.1 | 10.5 | 7.9 | 5.2 | 7.3* | 5.4* | 3.6* | 12.2 | 9.1 | 6.1 | 7.8* | 5.9* | 3.9* | 13.1* | 9.8* | 6.5* | 8.2* | 6.1* | 4.1* | 13.7* | 10.3* | 6.9* |
| | L/360 | 4.1 | 3.1 | 2.1 | 6.1 | 4.6 | 3.1 | 4.7 | 3.5 | 2.3 | 6.9 | 5.2 | 3.4 | 5.1 | 3.9 | 2.6 | 7.7 | 5.7 | 3.8 | 5.4 | 4.1 | 2.7 | 8.3 | 6.2 | 4.1 |
| 7.60 | Strength | 5.5 | 4.1 | 2.7 | 9.4 | 7.0 | 4.7 | 6.5* | 4.9* | 3.3* | 10.9 | 8.2 | 5.5 | 7.0* | 5.3* | 3.5* | 11.8* | 8.8* | 5.9* | 7.3* | 5.5* | 3.7* | 12.3* | 9.2* | 6.2* |
| | L/360 | 3.5 | 2.6 | 1.8 | 5.2 | 3.9 | 2.6 | 4.0 | 3.0 | 2.0 | 5.8 | 4.4 | 2.9 | 4.4 | 3.3 | 2.2 | 6.5 | 4.9 | 3.3 | 4.6 | 3.5 | 2.3 | 7.0 | 5.3 | 3.5 |
| 8.00 | Strength | 5.0 | 3.7 | 2.5 | 8.5 | 6.4 | 4.2 | 5.9* | 4.4* | 2.9* | 9.9 | 7.4 | 4.9 | 6.3* | 4.8* | 3.2* | 10.6 | 8.0 | 5.3 | 6.6* | 5.0* | 3.3* | 11.1* | 8.3* | 5.6* |
| | L/360 | 3.0 | 2.3 | 1.5 | 4.5 | 3.3 | 2.2 | 3.4 | 2.6 | 1.7 | 5.0 | 3.8 | 2.5 | 3.8 | 2.8 | 1.9 | 5.6 | 4.2 | 2.8 | 4.0 | 3.0 | 2.0 | 6.0 | 4.5 | 3.0 |
| 8.40 | Strength | 4.5 | 3.4 | 2.2 | 7.7 | 5.8 | 3.8 | 5.3 | 4.0 | 2.7 | 9.0 | 6.7 | 4.5 | 5.8* | 4.3* | 2.9* | 9.6 | 7.2 | 4.8 | 6.0* | 4.5* | 3.0* | 10.1 | 7.6 | 5.0 |
| | L/360 | 2.6 | 2.0 | 1.3 | 3.9 | 2.9 | 1.9 | 2.9 | 2.2 | 1.5 | 4.3 | 3.2 | 2.2 | 3.2 | 2.4 | 1.6 | 4.8 | 3.6 | 2.4 | 3.4 | 2.6 | 1.7 | 5.2 | 3.9 | 2.6 |
| 8.80 | Strength | 4.1 | 3.1 | 2.0 | 7.0 | 5.3 | 3.5 | 4.9 | 3.6 | 2.4 | 8.2 | 6.1 | 4.1 | 5.2* | 3.9* | 2.6* | 8.8 | 6.6 | 4.4 | 5.5* | 4.1* | 2.7* | 9.2 | 6.9 | 4.6 |
| | L/360 | 2.3 | 1.7 | 1.1 | 3.4 | 2.5 | 1.7 | 2.6 | 1.9 | 1.3 | 3.8 | 2.8 | 1.9 | 2.8 | 2.1 | 1.4 | 4.2 | 3.1 | 2.1 | 3.0 | 2.2 | 1.5 | 4.5 | 3.4 | 2.3 |
| 9.20 | Strength | 3.7 | 2.8 | 1.9 | 6.4 | 4.8 | 3.2 | 4.4 | 3.3 | 2.2 | 7.5 | 5.6 | 3.7 | 4.8 | 3.6 | 2.4 | 8.0 | 6.0 | 4.0 | 5.0* | 3.8* | 2.5* | 8.4 | 6.3 | 4.2 |
| | L/360 | 2.0 | 1.5 | 1.0 | 2.9 | 2.2 | 1.5 | 2.2 | 1.7 | 1.1 | 3.3 | 2.5 | 1.6 | 2.5 | 1.8 | 1.2 | 3.7 | 2.8 | 1.8 | 2.6 | 2.0 | 1.3 | 4.0 | 3.0 | 2.0 |
| 9.60 | Strength | 3.4 | 2.6 | 1.7 | 5.9 | 4.4 | 2.9 | 4.1 | 3.1 | 2.0 | 6.9 | 5.1 | 3.4 | 4.4 | 3.3 | 2.2 | 7.4 | 5.5 | 3.7 | 4.6 | 3.5 | 2.3 | 7.7 | 5.8 | 3.9 |
| | L/360 | 1.7 | 1.3 | 0.9 | 2.6 | 1.9 | 1.3 | 2.0 | 1.5 | 1.0 | 2.9 | 2.2 | 1.4 | 2.2 | 1.6 | 1.1 | 3.2 | 2.4 | 1.6 | 2.3 | 1.7 | 1.1 | 3.5 | 2.6 | 1.7 |
| 10.0 | Strength | 3.2 | 2.4 | 1.6 | 5.4 | 4.1 | 2.7 | 3.8 | 2.8 | 1.9 | 6.3 | 4.7 | 3.2 | 4.1 | 3.0 | 2.0 | 6.8 | 5.1 | 3.4 | 4.2 | 3.2 | 2.1 | 7.1 | 5.3 | 3.6 |
| | L/360 | 1.5 | 1.2 | 0.8 | 2.3 | 1.7 | 1.1 | 1.7 | 1.3 | 0.9 | 2.6 | 1.9 | 1.3 | 1.9 | 1.4 | 1.0 | 2.9 | 2.1 | 1.4 | 2.0 | 1.5 | 1.0 | 3.1 | 2.3 | 1.5 |
| 10.4 | Strength | 2.9 | 2.2 | 1.5 | 5.0 | 3.8 | 2.5 | 3.5 | 2.6 | 1.7 | 5.8 | 4.4 | 2.9 | 3.8 | 2.8 | 1.9 | 6.3 | 4.7 | 3.1 | 3.9 | 2.9 | 2.0 | 6.6 | 4.9 | 3.3 |
| | L/360 | 1.4 | 1.0 | 0.7 | 2.0 | 1.5 | 1.0 | 1.6 | 1.2 | 0.8 | 2.3 | 1.7 | 1.1 | 1.7 | 1.3 | 0.9 | 2.5 | 1.9 | 1.3 | 1.8 | 1.4 | 0.9 | 2.7 | 2.1 | 1.4 |
| 10.8 | Strength | 2.7 | 2.0 | 1.4 | 4.7 | 3.5 | 2.3 | 3.2 | 2.4 | 1.6 | 5.4 | 4.1 | 2.7 | 3.5 | 2.6 | 1.7 | 5.8 | 4.4 | 2.9 | 3.6 | 2.7 | 1.8 | 6.1 | 4.6 | 3.1 |
| | L/360 | 1.2 | 0.9 | 0.6 | 1.8 | 1.4 | 0.9 | 1.4 | 1.0 | 0.7 | 2.0 | 1.5 | 1.0 | 1.5 | 1.1 | 0.8 | 2.3 | 1.7 | 1.1 | 1.6 | 1.2 | 0.8 | 2.5 | 1.8 | 1.2 |
| 11.2 | Strength | 2.5 | 1.9 | 1.3 | 4.3 | 3.2 | 2.2 | 3.0 | 2.3 | 1.5 | 5.0 | 3.8 | 2.5 | 3.2 | 2.4 | 1.6 | 5.4 | 4.1 | 2.7 | 3.4 | 2.5 | 1.7 | 5.7 | 4.3 | 2.8 |
| | L/360 | 1.1 | 0.8 | 0.5 | 1.6 | 1.2 | 0.8 | 1.2 | 0.9 | 0.6 | 1.8 | 1.4 | 0.9 | 1.4 | 1.0 | 0.7 | 2.0 | 1.5 | 1.0 | 1.4 | 1.1 | 0.7 | 2.2 | 1.6 | 1.1 |
| 11.6 | Strength | 2.4 | 1.8 | 1.2 | 4.0 | 3.0 | 2.0 | 2.8 | 2.1 | 1.4 | 4.7 | 3.5 | 2.3 | 3.0 | 2.3 | 1.5 | 5.0 | 3.8 | 2.5 | 3.2 | 2.4 | 1.6 | 5.3 | 4.0 | 2.6 |
| | L/360 | 1.0 | 0.7 | 0.5 | 1.5 | 1.1 | 0.7 | 1.1 | 0.8 | 0.6 | 1.6 | 1.2 | 0.8 | 1.2 | 0.9 | 0.6 | 1.8 | 1.4 | 0.9 | 1.3 | 1.0 | 0.6 | 2.0 | 1.5 | 1.0 |
| 12.0 | Strength | 2.2 | 1.7 | | 3.8 | 2.8 | 1.9 | 2.6 | 2.0 | 1.3 | 4.4 | 3.3 | 2.2 | 2.8 | 2.1 | 1.4 | 4.7 | 3.5 | 2.4 | 2.9 | 2.2 | 1.5 | 4.9 | 3.7 | 2.5 |
| | L/360 | 0.9 | 0.7 | | 1.3 | 1.0 | 0.7 | 1.0 | 0.8 | 0.5 | 1.5 | 1.1 | 0.7 | 1.1 | 0.8 | 0.6 | 1.7 | 1.2 | 0.8 | 1.2 | 0.9 | 0.6 | 1.8 | 1.3 | 0.9 |
| 12.4 | Strength | 2.1 | 1.5 | | 3.5 | 2.6 | 1.8 | 2.4 | 1.8 | | 4.1 | 3.1 | 2.1 | 2.6 | 2.0 | 1.3 | 4.4 | 3.3 | 2.2 | 2.8 | 2.1 | 1.4 | 4.6 | 3.5 | 2.3 |
| | L/360 | 0.8 | 0.6 | | 1.2 | 0.9 | 0.6 | 0.9 | 0.7 | | 1.3 | 1.0 | 0.7 | 1.0 | 0.8 | 0.5 | 1.5 | 1.1 | 0.7 | 1.1 | 0.8 | 0.5 | 1.6 | 1.2 | 0.8 |

**NOTES:**

* Web stiffeners required at ends of members.

1) Values greater than 24 kPa and less than 0.5 kPa are not shown.

2) For other deflection limits such as L/480, multiply the L/360 uniform specified loads by the following factor:

| Deflection limit | Factor |
|---|---|
| L/480 | 360/480 = 0.75 |

Bailey Metal Products, Dass Metal Products, DCM Metal Corp., EB Métal Inc., Imperial Building Products, Manugypse, Groupe UP, Trebor Building Products Ltd.

# FLOOR JOIST LOAD TABLE

## Uniformly Distributed Single Span Loads (kPa) with $K_\varphi = 0$

**Strength - Factored Loads** | **L/360 - Specified Loads**

| | Section | 800S162-43 | | | 800S162-54 | | | 800S162-68 | | | 800S162-97 | | | 800S200-43 | | | 800S200-54 | | | 800S200-68 | | | 800S200-97 | | |
|---|---|---|---|---|---|---|---|---|---|---|---|---|---|---|---|---|---|---|---|---|---|---|---|---|---|
| Span | Design | Spacing (mm) | | | Spacing (mm) | | | Spacing (mm) | | | Spacing (mm) | | | Spacing (mm) | | | Spacing (mm) | | | Spacing (mm) | | | Spacing (mm) | | |
| (m) | Criteria | 305 | 406 | 610 | 305 | 406 | 610 | 305 | 406 | 610 | 305 | 406 | 610 | 305 | 406 | 610 | 305 | 406 | 610 | 305 | 406 | 610 | 305 | 406 | 610 |
| 2.40 | Strength | 13.6* | 10.2* | 6.8* | | 18.2* | 12.1* | | | 16.6* | | | | 15.7* | 11.8* | 7.9* | | 20.9* | 13.9* | | | 19.0* | | | |
| | L/360 | 19.2 | 14.4 | 9.6 | | 17.9 | 11.9 | | | 15.1 | | | | 22.7 | 17.0 | 11.3 | | 21.1 | 14.1 | | | 17.4 | | | |
| 2.80 | Strength | 10.0* | 7.5* | 5.0* | 17.8* | 13.4* | 8.9* | | 18.3* | 12.2* | | | 19.5* | 11.5* | 8.7* | 5.8* | 20.5* | 15.3* | 10.2* | | 20.9* | 14.0* | | | 22.1* |
| | L/360 | 12.1 | 9.1 | 6 | 15 | 11.3 | 7.5 | | 14.2 | 9.5 | | | 13.1 | 14.3 | 10.7 | 7.1 | 17.7 | 13.3 | 8.9 | | 16.4 | 11.0 | | | 15.1 |
| 3.20 | Strength | 7.7* | 5.8* | 3.8* | 13.6* | 10.2* | 6.8* | 18.7* | 14.0* | 9.3* | | 22.4* | 14.9* | 8.8* | 6.6* | 4.4* | 15.7* | 11.7* | 7.8* | 21.4* | 16.0* | 10.7* | | | 16.9* |
| | L/360 | 8.1 | 6.1 | 4.0 | 1.0 | 7.5 | 5.0 | 12.7 | 9.5 | 6.4 | | 13.1 | 8.8 | 9.6 | 7.2 | 4.8 | 11.9 | 8.9 | 5.9 | 14.7 | 11.0 | 7.3 | | | 10.1 |
| 3.60 | Strength | 6.1 | 4.5 | 3.0 | 10.8* | 8.1* | 5.4* | 14.8* | 11.1* | 7.4* | 23.6 | 17.7 | 11.8 | 7.0* | 5.2* | 3.5* | 12.4* | 9.3* | 6.2* | 16.9* | 12.7* | 8.4* | | 20.1* | 13.4* |
| | L/360 | 5.7 | 4.3 | 2.8 | 7.1 | 5.3 | 3.5 | 8.9 | 6.7 | 4.5 | 12.3 | 9.2 | 6.2 | 6.7 | 5.0 | 3.4 | 8.3 | 6.2 | 4.2 | 10.3 | 7.7 | 5.2 | | 10.7 | 7.1 |
| 4.00 | Strength | 4.9 | 3.7 | 2.5 | 8.7* | 6.5* | 4.4* | 12.0 | 9.0 | 6.0 | 19.1 | 14.3 | 9.5 | 5.7* | 4.2* | 2.8* | 10.0* | 7.5* | 5.0* | 13.7* | 10.3* | 6.8* | 21.7 | 16.3 | 10.8 |
| | L/360 | 4.1 | 3.1 | 2.1 | 5.1 | 3.9 | 2.6 | 6.5 | 4.9 | 3.3 | 9.0 | 6.7 | 4.5 | 4.9 | 3.7 | 2.4 | 6.1 | 4.6 | 3.0 | 7.5 | 5.6 | 3.8 | 10.4 | 7.8 | 5.2 |
| 4.40 | Strength | 4.1 | 3.0 | 2.0 | 7.2 | 5.4 | 3.6 | 9.9 | 7.4 | 4.9 | 15.8 | 11.8 | 7.9 | 4.7 | 3.5 | 2.3 | 8.3* | 6.2* | 4.1* | 11.3 | 8.5 | 5.7 | 17.9 | 13.4 | 9.0 |
| | L/360 | 3.1 | 2.3 | 1.6 | 3.9 | 2.9 | 1.9 | 4.9 | 3.7 | 2.4 | 6.7 | 5.1 | 3.4 | 3.7 | 2.8 | 1.8 | 4.6 | 3.4 | 2.3 | 5.7 | 4.2 | 2.8 | 7.8 | 5.8 | 3.9 |
| 4.80 | Strength | 3.4 | 2.6 | 1.7 | 6.1 | 4.5 | 3.0 | 8.3 | 6.2 | 4.2 | 13.3 | 9.9 | 6.6 | 3.9 | 2.9 | 2.0 | 7.0* | 5.2* | 3.5* | 9.5 | 7.1 | 4.7 | 15.1 | 11.3 | 7.5 |
| | L/360 | 2.4 | 1.8 | 1.2 | 3.0 | 2.2 | 1.5 | 3.8 | 2.8 | 1.9 | 5.2 | 3.9 | 2.6 | 2.8 | 2.1 | 1.4 | 3.5 | 2.6 | 1.8 | 4.4 | 3.3 | 2.2 | 6.0 | 4.5 | 3.0 |
| 5.20 | Strength | 2.9 | 2.2 | 1.5 | 5.2 | 3.9 | 2.6 | 7.1 | 5.3 | 3.5 | 11.3 | 8.5 | 5.6 | 3.3 | 2.5 | 1.7 | 5.9 | 4.5 | 3.0 | 8.1 | 6.1 | 4.0 | 12.8 | 9.6 | 6.4 |
| | L/360 | 1.9 | 1.4 | 0.9 | 2.3 | 1.8 | 1.2 | 3.0 | 2.2 | 1.5 | 4.1 | 3.1 | 2.0 | 2.2 | 1.7 | 1.1 | 2.8 | 2.1 | 1.4 | 3.4 | 2.6 | 1.7 | 4.7 | 3.5 | 2.4 |
| 5.60 | Strength | 2.5 | 1.9 | 1.3 | 4.5 | 3.3 | 2.2 | 6.1 | 4.6 | 3.0 | 9.7 | 7.3 | 4.9 | 2.9 | 2.2 | 1.4 | 5.1 | 3.8 | 2.6 | 7.0 | 5.2 | 3.5 | 11.1 | 8.3 | 5.5 |
| | L/360 | 1.5 | 1.1 | 0.8 | 1.9 | 1.4 | 0.9 | 2.4 | 1.8 | 1.2 | 3.3 | 2.5 | 1.6 | 1.8 | 1.3 | 0.9 | 2.2 | 1.7 | 1.1 | 2.7 | 2.1 | 1.4 | 3.8 | 2.8 | 1.9 |
| 6.00 | Strength | 2.2 | 1.6 | 1.1 | 3.9 | 2.9 | 1.9 | 5.3 | 4.0 | 2.7 | 8.5 | 6.4 | 4.2 | 2.5 | 1.9 | 1.3 | 4.5 | 3.3 | 2.2 | 6.1 | 4.6 | 3.0 | 9.6 | 7.2 | 4.8 |
| | L/360 | 1.2 | 0.9 | 0.6 | 1.5 | 1.1 | 0.8 | 1.9 | 1.4 | 1.0 | 2.7 | 2.0 | 1.3 | 1.5 | 1.1 | 0.7 | 1.8 | 1.3 | 0.9 | 2.2 | 1.7 | 1.1 | 3.1 | 2.3 | 1.5 |
| 6.40 | Strength | 1.9 | 1.4 | 1.0 | 3.4 | 2.6 | 1.7 | 4.7 | 3.5 | 2.3 | 7.5 | 5.6 | 3.7 | 2.2 | 1.7 | 1.1 | 3.9 | 2.9 | 2.0 | 5.3 | 4.0 | 2.7 | 8.5 | 6.4 | 4.2 |
| | L/360 | 1.0 | 0.8 | 0.5 | 1.3 | 0.9 | 0.6 | 1.6 | 1.2 | 0.8 | 2.2 | 1.6 | 1.1 | 1.2 | 0.9 | 0.6 | 1.5 | 1.1 | 0.7 | 1.8 | 1.4 | 0.9 | 2.5 | 1.9 | 1.3 |
| 6.80 | Strength | 1.7 | 1.3 | | 3.0 | 2.3 | 1.5 | 4.1 | 3.1 | 2.1 | 6.6 | 5.0 | 3.3 | 2.0 | 1.5 | 1.0 | 3.5 | 2.6 | 1.7 | 4.7 | 3.5 | 2.4 | 7.5 | 5.6 | 3.8 |
| | L/360 | 0.8 | 0.6 | | 1.0 | 0.8 | 0.5 | 1.3 | 1.0 | 0.7 | 1.8 | 1.4 | 0.9 | 1.0 | 0.7 | 0.5 | 1.2 | 0.9 | 0.6 | 1.5 | 1.1 | 0.8 | 2.1 | 1.6 | 1.1 |
| 7.20 | Strength | 1.5 | 1.1 | | 2.7 | 2.0 | | 3.7 | 2.8 | 1.8 | 5.9 | 4.4 | 2.9 | 1.7 | 1.3 | | 3.1 | 2.3 | 1.5 | 4.2 | 3.2 | 2.1 | 6.7 | 5.0 | 3.3 |
| | L/360 | 0.7 | 0.5 | | 0.9 | 0.7 | | 1.1 | 0.8 | 0.6 | 1.5 | 1.2 | 0.8 | 0.8 | 0.6 | | 1.0 | 0.8 | 0.5 | 1.3 | 1.0 | 0.6 | 1.8 | 1.3 | 0.9 |
| 7.60 | Strength | 1.4 | | | 2.4 | 1.8 | | 3.3 | 2.5 | | 5.3 | 4.0 | 2.6 | 1.6 | 1.2 | | 2.8 | 2.1 | | 3.8 | 2.8 | 1.9 | 6.0 | 4.5 | 3.0 |
| | L/360 | 0.6 | | | 0.8 | 0.6 | | 1.0 | 0.7 | | 1.3 | 1.0 | 0.7 | 0.7 | 0.5 | | 0.9 | 0.7 | | 1.1 | 0.8 | 0.5 | 1.5 | 1.1 | 0.8 |
| 8.00 | Strength | 1.2 | | | 2.2 | 1.6 | | 3.0 | 2.2 | | 4.8 | 3.6 | 2.4 | 1.4 | | | 2.5 | 1.9 | | 3.4 | 2.6 | | 5.4 | 4.1 | 2.7 |
| | L/360 | 0.5 | | | 0.6 | 0.5 | | 0.8 | 0.6 | | 1.1 | 0.8 | 0.6 | 0.6 | | | 0.8 | 0.6 | | 0.9 | 0.7 | | 1.3 | 1.0 | 0.6 |
| 8.40 | Strength | | | | 2.0 | | | 2.7 | 2.0 | | 4.3 | 3.2 | 2.2 | 1.3 | | | 2.3 | 1.7 | | 3.1 | 2.3 | | 4.9 | 3.7 | 2.5 |
| | L/360 | | | | 0.6 | | | 0.7 | 0.5 | | 1.0 | 0.7 | 0.5 | 0.5 | | | 0.7 | 0.5 | | 0.8 | 0.6 | | 1.1 | 0.8 | 0.6 |
| 8.80 | Strength | | | | 1.8 | | | 2.5 | | | 3.9 | 3.0 | | | | | 2.1 | | | 2.8 | 2.1 | | 4.5 | 3.4 | 2.2 |
| | L/360 | | | | 0.5 | | | 0.6 | | | 0.8 | 0.6 | | | | | 0.6 | | | 0.7 | 0.5 | | 1.0 | 0.7 | 0.5 |
| 9.20 | Strength | | | | | | | 2.3 | | | 3.6 | 2.7 | | | | | 1.9 | | | 2.6 | | | 4.1 | 3.1 | |
| | L/360 | | | | | | | 0.5 | | | 0.7 | 0.6 | | | | | 0.5 | | | 0.6 | | | 0.9 | 0.6 | |

**NOTES:**

* Web stiffeners required at ends of members.

1) Values greater than 24 kPa and less than 0.5 kPa are not shown.

2) For other deflection limits such as L/480, multiply the L/360 uniform specified loads by the following factor:

| Deflection limit | Factor |
|---|---|
| L/480 | 360/480 = 0.75 |

Bailey Metal Products, Dass Metal Products, DCM Metal Corp., EB Metal Inc., Imperial Building Products, Manugypse, Groupe UP, Trebor Building Products Ltd.

# Header Load Tables

## Table Notes

1 Values are for unpunched members and are given in kilonewtons per metre.
2 Headers are made from two "boxed" or “back-to-back” C-section members.
3 Factored moment, shear and web crippling resistances are based on twice the resistance of a single member. The moment of inertia for deflection is based on twice the value of a single member.
4 Web crippling check is based on 25 mm of bearing at end supports.
5 Members are assumed to be adequately braced for bending.
6 Header loads are for simply supported members subjected to uniform bending loads only.

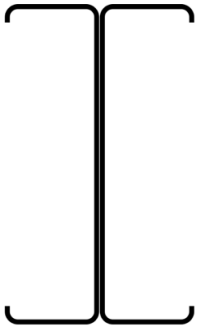

Back-to-Back Header

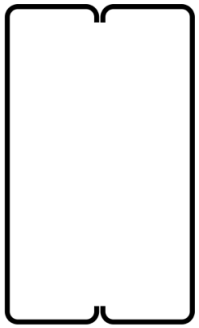

Boxed Header

Bailey Metal Products, Dass Metal Products, DCM Metal Corp., EB Métal Inc., Imperial Building Products, Manugypse, Groupe UP, Trebor Building Products Ltd.

# UNIFORM DISTRIBUTED HEADER LOADS (kN/m)

**Strength - Factored Loads** **L/360 - Specified Loads**

| Section | Design Criteria | $F_y$ (MPa) | Span (m) 1.2 | 1.6 | 2.0 | 2.4 | 2.8 | 3.2 | 3.6 | 4.0 | 4.4 | 4.8 | 5.2 | 5.6 | 6.0 |
|---|---|---|---|---|---|---|---|---|---|---|---|---|---|---|---|
| 600S162-33 | Strength | 230 | 11.93e | 8.95e | 6.40e | 4.44e | 3.27e | 2.50e | 1.98e | 1.60e | 1.32e | 1.11e | 0.95e | 0.82e | 0.71e |
| | L/360 | | 36.9 | 15.6 | 7.97 | 4.61 | 2.91 | 1.95 | 1.37 | 1.00 | 0.75 | 0.58 | 0.45 | 0.36 | 0.30 |
| 600S162-43 | Strength | 230 | 25.48e | 14.33e | 9.17e | 6.37e | 4.68e | 3.58e | 2.83e | 2.29e | 1.90e | 1.59e | 1.36e | 1.17e | 1.02e |
| | L/360 | | 47.7 | 20.1 | 10.3 | 5.96 | 3.75 | 2.51 | 1.77 | 1.29 | 0.97 | 0.75 | 0.59 | 0.47 | 0.38 |
| 600S162-54 | Strength | 345 | 45.53e | 25.61e | 16.39e | 11.38e | 8.36e | 6.40e | 5.06e | 4.10e | 3.39e | 2.85 | 2.42 | 2.09 | 1.82 |
| | L/360 | | 58.9 | 24.9 | 12.7 | 7.36 | 4.64 | 3.11 | 2.18 | 1.59 | 1.19 | 0.92 | 0.72 | 0.58 | 0.47 |
| 600S162-68 | Strength | 345 | 61.57e | 34.64e | 22.16e | 15.39e | 11.31e | 8.66e | 6.84e | 5.54e | 4.58 | 3.85 | 3.28 | 2.83 | 2.46 |
| | L/360 | | 72.6 | 30.6 | 15.7 | 9.07 | 5.71 | 3.83 | 2.69 | 1.96 | 1.47 | 1.13 | 0.89 | 0.71 | 0.58 |
| 600S162-97 | Strength | 345 | 107.03e | 60.21e | 38.53e | 26.76e | 19.66e | 15.05e | 11.89e | 9.63 | 7.96 | 6.69 | 5.70 | 4.91 | 4.28 |
| | L/360 | | 98.8 | 41.7 | 21.3 | 12.4 | 7.78 | 5.21 | 3.66 | 2.67 | 2.00 | 1.54 | 1.21 | 0.97 | 0.79 |
| 600S200-33 | Strength | 230 | 11.93e | 8.95e | 7.16e | 5.05e | 3.71e | 2.84e | 2.25e | 1.82e | 1.50e | 1.26e | 1.08e | 0.93e | 0.81e |
| | L/360 | | 42.0 | 17.7 | 9.08 | 5.25 | 3.31 | 2.22 | 1.56 | 1.14 | 0.85 | 0.66 | 0.52 | 0.41 | 0.34 |
| 600S200-43 | Strength | 230 | 26.46e | 16.26e | 10.41e | 7.23e | 5.31e | 4.07e | 3.21e | 2.60e | 2.15e | 1.81e | 1.54e | 1.33e | 1.16e |
| | L/360 | | 55.3 | 23.3 | 11.9 | 6.91 | 4.35 | 2.91 | 2.05 | 1.49 | 1.12 | 0.86 | 0.68 | 0.54 | 0.44 |
| 600S200-54 | Strength | 345 | 51.44e | 28.94e | 18.52e | 12.86e | 9.45e | 7.23e | 5.72e | 4.63e | 3.83e | 3.21e | 2.74e | 2.36 | 2.06 |
| | L/360 | | 68.4 | 28.8 | 14.8 | 8.54 | 5.38 | 3.60 | 2.53 | 1.85 | 1.39 | 1.07 | 0.84 | 0.67 | 0.55 |
| 600S200-68 | Strength | 345 | 69.53e | 39.11e | 25.03e | 17.38e | 12.77e | 9.78e | 7.73e | 6.26e | 5.17e | 4.35 | 3.70 | 3.19 | 2.78 |
| | L/360 | | 84.4 | 35.6 | 18.2 | 10.6 | 6.65 | 4.45 | 3.13 | 2.28 | 1.71 | 1.32 | 1.04 | 0.83 | 0.68 |
| 600S200-97 | Strength | 345 | 121.76e | 68.50e | 43.83e | 30.44e | 22.37e | 17.12e | 13.53e | 10.96e | 9.06 | 7.61 | 6.48 | 5.59 | 4.87 |
| | L/360 | | 116 | 48.8 | 25.0 | 14.5 | 9.10 | 6.09 | 4.28 | 3.12 | 2.34 | 1.81 | 1.42 | 1.14 | 0.92 |
| 600S250-33 | Strength | 230 | 11.93e | 8.95e | 7.16e | 5.29e | 3.89e | 2.97e | 2.35e | 1.90e | 1.57e | 1.32e | 1.13e | 0.97e | 0.85e |
| | L/360 | | 46.5 | 19.6 | 10.0 | 5.81 | 3.66 | 2.45 | 1.72 | 1.26 | 0.94 | 0.73 | 0.57 | 0.46 | 0.37 |
| 600S250-43 | Strength | 230 | 26.46e | 17.12e | 10.96e | 7.61e | 5.59e | 4.28e | 3.38e | 2.74e | 2.26e | 1.90e | 1.62e | 1.40e | 1.22e |
| | L/360 | | 63.0 | 26.6 | 13.6 | 7.87 | 4.96 | 3.32 | 2.33 | 1.70 | 1.28 | 0.98 | 0.77 | 0.62 | 0.50 |
| 600S250-54 | Strength | 345 | 52.77e | 30.33e | 19.41e | 13.48e | 9.90e | 7.58e | 5.99e | 4.85e | 4.01e | 3.37e | 2.87e | 2.48 | 2.16 |
| | L/360 | | 75.2 | 31.7 | 16.2 | 9.40 | 5.92 | 3.97 | 2.79 | 2.03 | 1.53 | 1.18 | 0.92 | 0.74 | 0.60 |
| 600S250-68 | Strength | 345 | 73.40e | 41.29e | 26.42e | 18.35e | 13.48e | 10.32e | 8.16e | 6.61e | 5.46e | 4.59e | 3.91 | 3.37 | 2.94 |
| | L/360 | | 96.0 | 40.5 | 20.7 | 12.0 | 7.56 | 5.06 | 3.56 | 2.59 | 1.95 | 1.50 | 1.18 | 0.94 | 0.77 |
| 600S250-97 | Strength | 345 | 115.76e | 65.13e | 41.67e | 28.94e | 21.26e | 16.28e | 12.86e | 10.42e | 8.61 | 7.24 | 6.17 | 5.32 | 4.63 |
| | L/360 | | 134 | 56.5 | 28.9 | 16.7 | 10.5 | 7.05 | 4.96 | 3.61 | 2.71 | 2.09 | 1.64 | 1.32 | 1.07 |
| 600S200-33 | Strength | 230 | 11.93e | 8.95e | 7.16e | 5.45e | 4.00e | 3.06e | 2.42e | 1.96e | 1.62e | 1.36e | 1.16e | 1.00e | 0.87e |
| | L/360 | | 50.3 | 21.2 | 10.9 | 6.29 | 3.96 | 2.65 | 1.86 | 1.36 | 1.02 | 0.79 | 0.62 | 0.49 | 0.40 |
| 600S300-43 | Strength | 230 | 26.46e | 17.72e | 11.34e | 7.88e | 5.79e | 4.43e | 3.50e | 2.84e | 2.34e | 1.97e | 1.68e | 1.45e | 1.26e |
| | L/360 | | 67.8 | 28.6 | 14.6 | 8.47 | 5.34 | 3.57 | 2.51 | 1.83 | 1.38 | 1.06 | 0.83 | 0.67 | 0.54 |
| 600S300-54 | Strength | 345 | 52.77e | 31.28e | 20.02e | 13.90e | 10.21e | 7.82e | 6.18e | 5.01e | 4.14e | 3.48e | 2.96e | 2.55e | 2.22 |
| | L/360 | | 81.0 | 34.2 | 17.5 | 10.1 | 6.37 | 4.27 | 3.00 | 2.19 | 1.64 | 1.26 | 0.99 | 0.80 | 0.65 |
| 600S300-68 | Strength | 345 | 76.11e | 42.82e | 27.40e | 19.03e | 13.98e | 10.70e | 8.46e | 6.85e | 5.66e | 4.76e | 4.05 | 3.49 | 3.04 |
| | L/360 | | 104 | 43.9 | 22.5 | 13.0 | 8.19 | 5.48 | 3.85 | 2.81 | 2.11 | 1.63 | 1.28 | 1.02 | 0.83 |
| 600S300-97 | Strength | 345 | 121.54e | 68.38e | 43.75e | 30.39e | 22.33e | 17.09e | 13.50e | 10.94e | 9.04 | 7.60 | 6.47 | 5.58 | 4.86 |
| | L/360 | | 149 | 63.0 | 32.2 | 18.7 | 11.8 | 7.87 | 5.53 | 4.03 | 3.03 | 2.33 | 1.83 | 1.47 | 1.19 |

NOTE: "e" web stiffeners required at ends.

Bailey Metal Products, Dass Metal Products, DCM Metal Corp., EB Metal Inc., Imperial Building Products, Manugypse, Groupe UP, Trebor Building Products Ltd.

# UNIFORM DISTRIBUTED HEADER LOADS (kN/m)

**Strength - Factored Loads** **L/360 - Specified Loads**

| Section | Design Criteria | $F_y$ (MPa) | Span (m) 1.2 | 1.6 | 2.0 | 2.4 | 2.8 | 3.2 | 3.6 | 4.0 | 4.4 | 4.8 | 5.2 | 5.6 | 6.0 |
|---|---|---|---|---|---|---|---|---|---|---|---|---|---|---|---|
| 800S162-43 | Strength | 230 | 19.65e | 14.74e | 11.79e | 8.61e | 6.32e | 4.84e | 3.83e | 3.10e | 2.56e | 2.15e | 1.83e | 1.58e | 1.38e |
| | L/360 | | 92.3 | 38.9 | 19.9 | 11.5 | 7.26 | 4.86 | 3.42 | 2.49 | 1.87 | 1.44 | 1.13 | 0.91 | 0.74 |
| 800S162-54 | Strength | 345 | 39.09e | 29.32e | 22.19e | 15.41e | 11.32e | 8.67e | 6.85e | 5.55e | 4.58e | 3.85e | 3.28e | 2.83e | 2.47e |
| | L/360 | | 115 | 48.4 | 24.8 | 14.3 | 9.02 | 6.04 | 4.24 | 3.09 | 2.32 | 1.79 | 1.41 | 1.13 | 0.92 |
| 800S162-68 | Strength | 345 | 78.90e | 47.70e | 30.52e | 21.20e | 15.57e | 11.92e | 9.42e | 7.63e | 6.31e | 5.30e | 4.52e | 3.89e | 3.39 |
| | L/360 | | 145 | 61.2 | 31.3 | 18.1 | 11.4 | 7.65 | 5.38 | 3.92 | 2.94 | 2.27 | 1.78 | 1.43 | 1.16 |
| 800S162-97 | Strength | 345 | 135.34e | 76.14e | 48.72e | 33.84e | 24.86e | 19.03e | 15.04e | 12.18e | 10.07e | 8.46e | 7.21 | 6.21 | 5.41 |
| | L/360 | | 200 | 84.4 | 43.2 | 25.0 | 15.8 | 10.6 | 7.41 | 5.40 | 4.06 | 3.13 | 2.46 | 1.97 | 1.60 |
| 800S200-43 | Strength | 230 | 19.65e | 14.74e | 11.79e | 9.83e | 7.24e | 5.54e | 4.38e | 3.55e | 2.93e | 2.46e | 2.10e | 1.81e | 1.58e |
| | L/360 | | 109 | 46.1 | 23.6 | 13.7 | 8.60 | 5.76 | 4.04 | 2.95 | 2.21 | 1.71 | 1.34 | 1.07 | 0.87 |
| 800S200-54 | Strength | 345 | 39.09e | 29.32e | 23.46e | 17.55e | 12.89e | 9.87e | 7.80e | 6.32e | 5.22e | 4.39e | 3.74e | 3.22e | 2.81e |
| | L/360 | | 135 | 57.1 | 29.2 | 16.9 | 10.7 | 7.14 | 5.01 | 3.65 | 2.75 | 2.11 | 1.66 | 1.33 | 1.08 |
| 800S200-68 | Strength | 345 | 78.90e | 54.04e | 34.57e | 24.01e | 17.64e | 13.51e | 10.67e | 8.65e | 7.14e | 6.00e | 5.12e | 4.41e | 3.84e |
| | L/360 | | 168 | 70.7 | 36.2 | 21.0 | 13.2 | 8.84 | 6.21 | 4.53 | 3.40 | 2.62 | 2.06 | 1.65 | 1.34 |
| 800S200-97 | Strength | 345 | 152.63e | 85.87e | 54.94e | 38.16e | 28.04e | 21.46e | 16.96e | 13.74e | 11.35e | 9.54e | 8.13e | 7.01 | 6.11 |
| | L/360 | | 231 | 97.4 | 49.8 | 28.8 | 18.2 | 12.2 | 8.54 | 6.23 | 4.68 | 3.60 | 2.84 | 2.27 | 1.85 |
| 800S250-43 | Strength | 230 | 19.65e | 14.74e | 11.79e | 9.83e | 7.61e | 5.82e | 4.60e | 3.73e | 3.08e | 2.59e | 2.21e | 1.90e | 1.66e |
| | L/360 | | 123 | 51.9 | 26.6 | 15.4 | 9.68 | 6.48 | 4.55 | 3.32 | 2.49 | 1.92 | 1.51 | 1.21 | 0.98 |
| 800S250-54 | Strength | 345 | 39.09e | 29.32e | 23.46e | 18.37e | 13.50e | 10.33e | 8.16e | 6.61e | 5.46e | 4.59e | 3.91e | 3.37e | 2.94e |
| | L/360 | | 147 | 62.2 | 31.8 | 18.4 | 11.6 | 7.77 | 5.45 | 3.98 | 2.99 | 2.30 | 1.81 | 1.45 | 1.18 |
| 800S250-68 | Strength | 345 | 78.90e | 56.80e | 36.35e | 25.24e | 18.55e | 14.20e | 11.22e | 9.09e | 7.51e | 6.31e | 5.38e | 4.64e | 4.04e |
| | L/360 | | 188 | 79.3 | 40.6 | 23.5 | 14.8 | 9.92 | 6.96 | 5.08 | 3.81 | 2.94 | 2.31 | 1.85 | 1.50 |
| 800S250-97 | Strength | 345 | 162.26e | 91.28e | 58.41e | 40.57e | 29.81e | 22.82e | 18.03e | 14.60e | 12.07e | 10.14e | 8.64e | 7.45e | 6.49 |
| | L/360 | | 263 | 111 | 56.9 | 32.9 | 20.7 | 13.9 | 9.75 | 7.11 | 5.34 | 4.12 | 3.24 | 2.59 | 2.11 |
| 800S300-43 | Strength | 230 | 19.65e | 14.74e | 11.79e | 9.83e | 7.84e | 6.00e | 4.74e | 3.84e | 3.18e | 2.67e | 2.27e | 1.96e | 1.71e |
| | L/360 | | 132 | 55.5 | 28.4 | 16.4 | 10.4 | 6.93 | 4.87 | 3.55 | 2.67 | 2.05 | 1.62 | 1.29 | 1.05 |
| 800S300-54 | Strength | 345 | 39.09e | 29.32e | 23.46e | 18.88e | 13.87e | 10.62e | 8.39e | 6.80e | 5.62e | 4.72e | 4.02e | 3.47e | 3.02e |
| | L/360 | | 158 | 66.5 | 34.0 | 19.7 | 12.4 | 8.31 | 5.84 | 4.25 | 3.20 | 2.46 | 1.94 | 1.55 | 1.26 |
| 800S300-68 | Strength | 345 | 78.90e | 58.60e | 37.49e | 26.04e | 19.13e | 14.65e | 11.57e | 9.37e | 7.75e | 6.51e | 5.55e | 4.78e | 4.17e |
| | L/360 | | 202 | 85.3 | 43.7 | 25.3 | 15.9 | 10.7 | 7.49 | 5.46 | 4.10 | 3.16 | 2.49 | 1.99 | 1.62 |
| 800S300-97 | Strength | 345 | 168.91e | 95.02e | 60.80e | 42.23e | 31.03e | 23.75e | 18.77e | 15.20e | 12.56e | 10.56e | 9.00e | 7.76e | 6.76e |
| | L/360 | | 291 | 123 | 62.8 | 36.3 | 22.9 | 15.3 | 10.8 | 7.85 | 5.89 | 4.54 | 3.57 | 2.86 | 2.32 |

NOTE: "e" web stiffeners required at ends.

Bailey Metal Products, Dass Metal Products, DCM Metal Corp., EB Metal Inc., Imperial Building Products, Manugypse, Groupe UP, Trebor Building Products Ltd.

# UNIFORM DISTRIBUTED HEADER LOADS (kN/m)

**Strength - Factored Loads** **L/360 - Specified Loads**

| Section | Design Criteria | $F_y$ (MPa) | Span (m) 1.2 | 1.6 | 2.0 | 2.4 | 2.8 | 3.2 | 3.6 | 4.0 | 4.4 | 4.8 | 5.2 | 5.6 | 6.0 |
|---|---|---|---|---|---|---|---|---|---|---|---|---|---|---|---|
| 1000S162-54 | Strength | 345 | 31.05e | 23.29e | 18.63e | 15.52e | 13.31e | 10.66e | 8.42e | 6.82e | 5.64e | 4.74e | 4.04e | 3.48e | 3.03e |
| | L/360 | | 192 | 80.8 | 41.4 | 23.9 | 15.1 | 10.1 | 7.09 | 5.17 | 3.89 | 2.99 | 2.35 | 1.88 | 1.53 |
| 1000S162-68 | Strength | 345 | 62.54e | 46.91e | 37.52e | 26.47e | 19.45e | 14.89e | 11.77e | 9.53e | 7.88e | 6.62e | 5.64e | 4.86e | 4.24e |
| | L/360 | | 245 | 103 | 53.0 | 30.7 | 19.3 | 12.9 | 9.08 | 6.62 | 4.97 | 3.83 | 3.01 | 2.41 | 1.96 |
| 1000S162-97 | Strength | 345 | 174.06e | 97.92e | 62.65e | 43.51e | 31.97e | 24.48e | 19.34e | 15.67e | 12.95e | 10.88e | 9.27e | 7.99e | 6.96e |
| | L/360 | | 349 | 147 | 75.5 | 43.7 | 27.5 | 18.4 | 12.9 | 9.43 | 7.09 | 5.46 | 4.29 | 3.44 | 2.80 |
| 1000S200-54 | Strength | 345 | 31.05e | 23.29e | 18.63e | 15.52e | 13.31e | 11.64e | 9.73e | 7.88e | 6.51e | 5.47e | 4.66e | 4.02e | 3.50e |
| | L/360 | | 219 | 92.5 | 47.3 | 27.4 | 17.3 | 11.6 | 8.12 | 5.92 | 4.45 | 3.42 | 2.69 | 2.16 | 1.75 |
| 1000S200-68 | Strength | 345 | 62.54e | 46.91e | 37.52e | 30.29e | 22.26e | 17.04e | 13.46e | 10.91e | 9.01e | 7.57e | 6.45e | 5.56e | 4.85e |
| | L/360 | | 280 | 118 | 60.4 | 35.0 | 22.0 | 14.8 | 10.4 | 7.55 | 5.67 | 4.37 | 3.44 | 2.75 | 2.24 |
| 1000S200-97 | Strength | 345 | 184.39e | 110.78e | 70.88e | 49.23e | 36.17e | 27.69e | 21.88e | 17.72e | 14.65e | 12.31e | 10.49e | 9.04e | 7.88e |
| | L/360 | | 398 | 168 | 86.0 | 49.8 | 31.4 | 21.0 | 14.8 | 10.8 | 8.08 | 6.22 | 4.89 | 3.92 | 3.19 |
| 1000S250-54 | Strength | 345 | 31.05e | 23.29e | 18.63e | 15.52e | 13.31e | 11.64e | 10.26e | 8.31e | 6.87e | 5.77e | 4.92e | 4.24e | 3.69e |
| | L/360 | | 251 | 106 | 54.1 | 31.3 | 19.7 | 13.2 | 9.28 | 6.77 | 5.08 | 3.92 | 3.08 | 2.47 | 2.01 |
| 1000S250-68 | Strength | 345 | 62.54e | 46.91e | 37.52e | 31.27e | 23.50e | 17.99e | 14.22e | 11.52e | 9.52e | 8.00e | 6.81e | 5.88e | 5.12e |
| | L/360 | | 320 | 135 | 69.1 | 40.0 | 25.2 | 16.9 | 11.9 | 8.64 | 6.49 | 5.00 | 3.93 | 3.15 | 2.56 |
| 1000S250-97 | Strength | 345 | 184.39e | 117.64e | 75.27e | 52.28e | 38.41e | 29.40e | 23.23e | 18.82e | 15.55e | 13.07e | 11.14e | 9.60e | 8.36e |
| | L/360 | | 449 | 190 | 97.1 | 56.2 | 35.4 | 23.7 | 16.7 | 12.1 | 9.12 | 7.02 | 5.52 | 4.42 | 3.60 |
| 1000S300-54 | Strength | 345 | 31.05e | 23.29e | 18.63e | 15.52e | 13.31e | 11.64e | 10.35e | 8.56e | 7.08e | 5.95e | 5.07e | 4.37e | 3.81e |
| | L/360 | | 263 | 111 | 56.8 | 32.9 | 20.7 | 13.9 | 9.74 | 7.10 | 5.33 | 4.11 | 3.23 | 2.59 | 2.10 |
| 1000S300-68 | Strength | 345 | 62.54e | 46.91e | 37.52e | 31.27e | 24.28e | 18.59e | 14.69e | 11.90e | 9.83e | 8.26e | 7.04e | 6.07e | 5.29e |
| | L/360 | | 342 | 144 | 73.9 | 42.8 | 26.9 | 18.0 | 12.7 | 9.23 | 6.94 | 5.34 | 4.20 | 3.36 | 2.74 |
| 1000S300-97 | Strength | 345 | 184.39e | 122.22e | 78.20e | 54.31e | 39.91e | 30.55e | 24.14e | 19.55e | 16.16e | 13.58e | 11.57e | 9.98e | 8.69e |
| | L/360 | | 492 | 208 | 106 | 61.5 | 38.7 | 25.9 | 18.2 | 13.3 | 9.97 | 7.68 | 6.04 | 4.84 | 3.93 |

NOTE: "e" web stiffeners required at ends.

Bailey Metal Products, Dass Metal Products, DCM Metal Corp., EB Metal Inc., Imperial Building Products, Manugypse, Groupe UP, Trebor Building Products Ltd.

## UNIFORM DISTRIBUTED HEADER LOADS (kN/m)

**Strength - Factored Loads** | **L/360 - Specified Loads**

| Section | Design Criteria | $F_y$ (MPa) | Span (m) 1.2 | 1.6 | 2.0 | 2.4 | 2.8 | 3.2 | 3.6 | 4.0 | 4.4 | 4.8 | 5.2 | 5.6 | 6.0 |
|---|---|---|---|---|---|---|---|---|---|---|---|---|---|---|---|
| 1200S162-68 | Strength | 345 | 51.80e | 38.85e | 31.08e | 25.90e | 22.20e | 17.47e | 13.80e | 11.18e | 9.24e | 7.77e | 6.62e | 5.70e | 4.97e |
| | L/360 | | 376 | 158 | 81.1 | 46.9 | 29.6 | 19.8 | 13.9 | 10.1 | 7.62 | 5.87 | 4.62 | 3.69 | 3.00 |
| 1200S162-97 | Strength | 345 | 152.30e | 114.23e | 75.32e | 52.31e | 38.43e | 29.42e | 23.25e | 18.83e | 15.56e | 13.08e | 11.14e | 9.61e | 8.37e |
| | L/360 | | 548 | 231 | 118 | 68.4 | 43.1 | 28.9 | 20.3 | 14.8 | 11.1 | 8.56 | 6.73 | 5.39 | 4.38 |
| 1200S200-68 | Strength | 345 | 51.80e | 38.85e | 31.08e | 25.90e | 22.20e | 19.42e | 15.98e | 12.94e | 10.69e | 8.99e | 7.66e | 6.60e | 5.75e |
| | L/360 | | 426 | 180 | 92.0 | 53.3 | 33.5 | 22.5 | 15.8 | 11.5 | 8.64 | 6.66 | 5.24 | 4.19 | 3.41 |
| 1200S200-97 | Strength | 345 | 152.30e | 114.23e | 85.84e | 59.62e | 43.80e | 33.53e | 26.50e | 21.46e | 17.74e | 14.90e | 12.70e | 10.95e | 9.54e |
| | L/360 | | 619 | 261 | 134 | 77.3 | 48.7 | 32.6 | 22.9 | 16.7 | 12.6 | 9.67 | 7.60 | 6.09 | 4.95 |
| 1200S250-68 | Strength | 345 | 51.80e | 38.85e | 31.08e | 25.90e | 22.20e | 19.42e | 17.02e | 13.79e | 11.40e | 9.58e | 8.16e | 7.04e | 6.13e |
| | L/360 | | 470.6 | 198.6 | 101.6 | 58.8 | 37.1 | 24.8 | 17.4 | 12.7 | 9.55 | 7.35 | 5.78 | 4.63 | 3.76 |
| 1200S250-97 | Strength | 345 | 152.30e | 114.23e | 91.38e | 63.60e | 46.73e | 35.77e | 28.27e | 22.90e | 18.92e | 15.90e | 13.55e | 11.68e | 10.18e |
| | L/360 | | 693 | 292 | 150 | 86.61 | 54.6 | 36.5 | 25.7 | 18.7 | 14.1 | 10.8 | 8.52 | 6.82 | 5.54 |
| 1200S300-68 | Strength | 345 | 51.80e | 38.85e | 31.08e | 25.90e | 22.20e | 19.42e | 17.27e | 14.33e | 11.84e | 9.95e | 8.48e | 7.31e | 6.37e |
| | L/360 | | 529 | 223 | 114 | 66.2 | 41.7 | 27.9 | 19.6 | 14.3 | 10.7 | 8.27 | 6.50 | 5.21 | 4.23 |
| 1200S300-97 | Strength | 345 | 152.30e | 114.23e | 91.38e | 66.25e | 48.68e | 37.27e | 29.45e | 23.85e | 19.71e | 16.56e | 14.11e | 12.17e | 10.60e |
| | L/360 | | 761 | 321 | 164 | 95.1 | 59.9 | 40.1 | 28.2 | 20.6 | 15.4 | 11.9 | 9.35 | 7.49 | 6.09 |

NOTE: "e" web stiffeners required at ends.

## UNIFORM DISTRIBUTED HEADER LOADS (kN/m)

**Strength - Factored Loads** | **L/360 - Specified Loads**

| Section | Design Criteria | $F_y$ (MPa) | Span (m) 1.2 | 1.6 | 2.0 | 2.4 | 2.8 | 3.2 | 3.6 | 4.0 | 4.4 | 4.8 | 5.2 | 5.6 | 6.0 |
|---|---|---|---|---|---|---|---|---|---|---|---|---|---|---|---|
| 1400S162-68 | Strength | 345 | 44.20e | 33.16e | 26.52e | 22.10e | 18.95e | 16.58e | 14.73e | 12.60e | 10.41e | 8.75e | 7.46e | 6.43e | 5.60e |
| | L/360 | | 537 | 227 | 116 | 67.2 | 42.3 | 28.3 | 19.9 | 14.5 | 10.9 | 8.40 | 6.60 | 5.29 | 4.30 |
| 1400S162-97 | Strength | 345 | 129.72e | 97.30e | 77.83e | 60.12e | 44.17e | 33.81e | 26.72e | 21.64e | 17.89e | 15.03e | 12.81e | 11.04e | 9.62e |
| | L/360 | | 794 | 335 | 172 | 99.3 | 62.5 | 41.9 | 29.4 | 21.5 | 16.1 | 12.4 | 9.76 | 7.82 | 6.35 |
| 1400S200-68 | Strength | 345 | 44.20e | 33.16e | 26.52e | 22.10e | 18.95e | 16.58e | 14.73e | 13.26e | 12.06e | 10.22e | 8.71e | 7.51e | 6.54e |
| | L/360 | | 607 | 256 | 131 | 75.9 | 47.8 | 32.0 | 22.5 | 16.4 | 12.3 | 9.49 | 7.46 | 5.97 | 4.86 |
| 1400S200-97 | Strength | 345 | 129.72e | 97.30e | 77.83e | 64.86e | 50.73e | 38.84e | 30.69e | 24.86e | 20.54e | 17.26e | 14.71e | 12.68e | 11.05e |
| | L/360 | | 892 | 376 | 193 | 112 | 70.2 | 47.1 | 33.1 | 24.1 | 18.1 | 13.9 | 11.0 | 8.78 | 7.14 |
| 1400S250-68 | Strength | 345 | 44.20e | 33.16e | 26.52e | 22.10e | 18.95e | 16.58e | 14.73e | 13.26e | 12.06e | 11.01e | 9.38e | 8.09e | 7.04e |
| | L/360 | | 667 | 282 | 144 | 83.4 | 52.5 | 35.2 | 24.7 | 18.0 | 13.5 | 10.4 | 8.20 | 6.57 | 5.34 |
| 1400S250-97 | Strength | 345 | 129.72e | 97.30e | 77.83e | 64.86e | 54.51e | 41.73e | 32.97e | 26.71e | 22.07e | 18.55e | 15.80e | 13.63e | 11.87e |
| | L/360 | | 994 | 419 | 215 | 124 | 78.23 | 52.4 | 36.8 | 26.8 | 20.2 | 15.5 | 12.2 | 9.78 | 7.95 |
| 1400S300-68 | Strength | 345 | 44.20e | 33.16e | 26.52e | 22.10e | 18.95e | 16.58e | 14.73e | 13.26e | 12.06e | 11.05e | 9.82e | 8.47e | 7.38e |
| | L/360 | | 704 | 297 | 152 | 88.0 | 55.4 | 37.1 | 26.1 | 19.0 | 14.3 | 11.0 | 8.66 | 6.93 | 5.63 |
| 1400S300-97 | Strength | 345 | 129.72e | 97.30e | 77.83e | 64.86e | 55.60e | 43.71e | 34.54e | 27.97e | 23.12e | 19.43e | 16.55e | 14.27e | 12.43e |
| | L/360 | | 1074 | 453 | 232 | 134 | 84.5 | 56.6 | 39.8 | 29.0 | 21.8 | 16.8 | 13.2 | 10.6 | 8.59 |

NOTE: "e" web stiffeners required at ends.

Bailey Metal Products, Dass Metal Products, DCM Metal Corp., EB Metal Inc., Imperial Building Products, Manugypse, Groupe UP, Trebor Building Products Ltd.

# Web Crippling Data

## Table Notes

1 The factored web cripping data is based on Section G5 of S136-16.

2 For single web members, the coefficients and resistance factors are based on Table G5-2. If N/h > 2, then N can not be greater than 2h. If N/t > 210, then N can not be greater than 210t.

3 For back-to-back members, the cofficients and resistance factors are based on Table G5-1. If N/h > 1, then N can not be greater than h. If N/t > 210, then N can not be greater than 210t.

4 Coefficients and resistance factors are based on members "Fastened to Support", except for back-to-back members under two-flange loading, the coefficients and resistance factors "Unfastened to Support" are used.

5 For back-to-back members, the distance between web connectors and flange shall be kept to a minimun.

6 Calculations are based on unperforated webs. Resistance reductions for end and interior one flange loading near punchouts can be calculated based on Section G6 of S136-16.

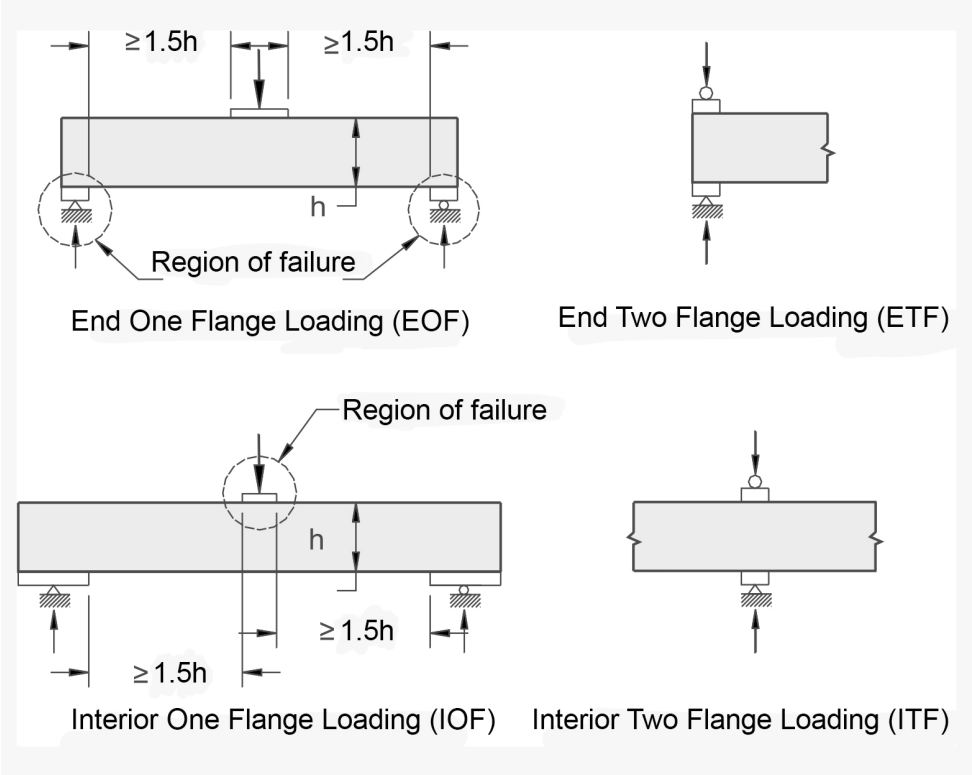


Bailey Metal Products, Dass Metal Products, DCM Metal Corp., EB Métal Inc., Imperial Building Products, Manugypse, Groupe UP, Trebor Building Products Ltd.

## FACTORED WEB CRIPPLING DATA FOR *SINGLE* WEB MEMBERS (Metric)

| Section Depth (mm) | Designation Thickness (mil) | Base Design Thickness (mm) | $F_y$ (MPa) | h/t | FACTORED WEB CRIPPLING DATA (kN) | | | | | | | |
|---|---|---|---|---|---|---|---|---|---|---|---|---|
| | | | | | *EOF* | | *IOF* | | *ETF* | | *ITF* | |
| | | | | | $P_{eo1}$ | $P_{eo2}$ | $P_{io1}$ | $P_{io2}$ | $P_{et1}$ | $P_{et2}$ | $P_{it1}$ | $P_{it2}$ |
| **92** | 33 | 0.879 | 230 | 98.3 | 0.33 | 0.12 | 1.09 | 0.15 | 0.46 | 0.05 | 1.55 | 0.12 |
| | 43 | 1.146 | 230 | 75.2 | 0.61 | 0.21 | 2.02 | 0.28 | 0.88 | 0.11 | 2.86 | 0.23 |
| | 54 | 1.438 | 345 | 59.0 | 1.50 | 0.52 | 4.92 | 0.69 | 2.28 | 0.27 | 7.14 | 0.57 |
| | 68 | 1.811 | 345 | 45.8 | 2.43 | 0.85 | 7.87 | 1.10 | 3.87 | 0.46 | 11.8 | 0.94 |
| | 97 | 2.583 | 345 | 30.6 | 5.08 | 1.78 | 16.2 | 2.27 | 8.57 | 1.03 | 25.1 | 2.01 |
| **102** | 33 | 0.879 | 230 | 109 | 0.33 | 0.12 | 1.08 | 0.15 | 0.43 | 0.05 | 1.52 | 0.12 |
| | 43 | 1.146 | 230 | 83.5 | 0.60 | 0.21 | 2.01 | 0.28 | 0.85 | 0.10 | 2.81 | 0.22 |
| | 54 | 1.438 | 345 | 65.7 | 1.48 | 0.52 | 4.89 | 0.68 | 2.21 | 0.27 | 7.02 | 0.56 |
| | 68 | 1.811 | 345 | 51.1 | 2.41 | 0.84 | 7.84 | 1.10 | 3.77 | 0.45 | 11.6 | 0.93 |
| | 97 | 2.583 | 345 | 34.3 | 5.05 | 1.77 | 16.2 | 2.27 | 8.39 | 1.01 | 24.8 | 1.98 |
| **152** | 33 | 0.879 | 230 | 167 | 0.31 | 0.11 | 1.05 | 0.15 | 0.33 | 0.04 | 1.34 | 0.11 |
| | 43 | 1.146 | 230 | 128 | 0.57 | 0.20 | 1.96 | 0.27 | 0.69 | 0.08 | 2.54 | 0.20 |
| | 54 | 1.438 | 345 | 101 | 1.41 | 0.50 | 4.79 | 0.67 | 1.87 | 0.22 | 6.46 | 0.52 |
| | 68 | 1.811 | 345 | 79.2 | 2.31 | 0.81 | 7.70 | 1.08 | 3.29 | 0.39 | 10.8 | 0.86 |
| | 97 | 2.583 | 345 | 54.0 | 4.88 | 1.71 | 15.9 | 2.23 | 7.55 | 0.91 | 23.4 | 1.87 |
| **203** | 43 | 1.146 | 230 | 172 | 0.54 | 0.19 | 1.92 | 0.27 | 0.56 | 0.07 | 2.32 | 0.19 |
| | 54 | 1.438 | 345 | 136 | 1.36 | 0.48 | 4.70 | 0.66 | 1.59 | 0.19 | 5.98 | 0.48 |
| | 68 | 1.811 | 345 | 107 | 2.23 | 0.78 | 7.57 | 1.06 | 2.89 | 0.35 | 10.1 | 0.81 |
| | 97 | 2.583 | 345 | 73.7 | 4.74 | 1.66 | 15.7 | 2.20 | 6.86 | 0.82 | 22.2 | 1.78 |
| **254** | 54 | 1.438 | 345 | 172 | 1.31 | 0.46 | 4.63 | 0.65 | 1.34 | 0.16 | 5.57 | 0.45 |
| | 68 | 1.811 | 345 | 135 | 2.16 | 0.75 | 7.46 | 1.04 | 2.53 | 0.30 | 9.52 | 0.76 |
| | 97 | 2.583 | 345 | 93.3 | 4.61 | 1.61 | 15.5 | 2.17 | 6.26 | 0.75 | 21.2 | 1.70 |
| **305** | 68 | 1.811 | 345 | 163 | 2.09 | 0.73 | 7.37 | 1.03 | 2.22 | 0.27 | 8.99 | 0.72 |
| | 97 | 2.583 | 345 | 113 | 4.50 | 1.58 | 15.4 | 2.15 | 5.72 | 0.69 | 20.3 | 1.62 |
| **356** | 68 | 1.811 | 345 | 191 | 2.03 | 0.71 | 7.28 | 1.02 | 1.93 | 0.23 | 8.50 | 0.68 |
| | 97 | 2.583 | 345 | 133 | 4.40 | 1.54 | 15.2 | 2.13 | 5.22 | 0.63 | 19.5 | 1.56 |

**NOTES:**

1. Factored end one flange web crippling resistance (EOF), $P_{reo} = P_{eo1} + P_{eo2}[N/t]^{1/2}$
2. Factored interior one flange web crippling resistance (IOF), $P_{rio} = P_{io1} + P_{io2}[N/t]^{1/2}$
3. Factored end two flange web crippling resistance (ETF), $P_{ret} = P_{et1} + P_{et2}[N/t]^{1/2}$
4. Factored interior two flange web crippling resistance (ITF), $P_{rit} = P_{it1} + P_{it2}[N/t]^{1/2}$

Bailey Metal Products, Dass Metal Products, DCM Metal Corp., EB Métal Inc., Imperial Building Products, Manugypse, Groupe UP, Trebor Building Products Ltd.

## FACTORED WEB CRIPPLING DATA FOR *BACK TO BACK* WEB MEMBERS (Metric)

| Section Depth (mm) | Designation Thickness (mil) | Base Design Thickness (mm) | $F_y$ (MPa) | h/t | FACTORED WEB CRIPPLING DATA (kN) | | | | | | | |
|---|---|---|---|---|---|---|---|---|---|---|---|---|
| | | | | | *EOF* | | *IOF* | | *ETF* | | *ITF* | |
| | | | | | $P_{eo1}$ | $P_{eo2}$ | $P_{io1}$ | $P_{io2}$ | $P_{et1}$ | $P_{et2}$ | $P_{it1}$ | $P_{it2}$ |
| **92** | 33 | 0.879 | 230 | 98.3 | 1.65 | 0.46 | 4.00 | 0.44 | 1.85 | 0.15 | 3.93 | 0.31 |
| | 43 | 1.146 | 230 | 75.2 | 2.93 | 0.82 | 7.16 | 0.79 | 3.48 | 0.28 | 7.52 | 0.60 |
| | 54 | 1.438 | 345 | 59.0 | 7.03 | 1.97 | 17.2 | 1.89 | 8.85 | 0.71 | 19.1 | 1.53 |
| | 68 | 1.811 | 345 | 45.8 | 11.2 | 3.13 | 27.3 | 3.01 | 14.8 | 1.18 | 32.0 | 2.56 |
| | 97 | 2.583 | 345 | 30.6 | 22.7 | 6.37 | 55.7 | 6.13 | 32.1 | 2.57 | 69.4 | 5.56 |
| **102** | 33 | 0.879 | 230 | 109 | 1.65 | 0.46 | 3.99 | 0.44 | 1.79 | 0.14 | 3.79 | 0.30 |
| | 43 | 1.146 | 230 | 83.5 | 2.93 | 0.82 | 7.15 | 0.79 | 3.39 | 0.27 | 7.30 | 0.58 |
| | 54 | 1.438 | 345 | 65.7 | 7.03 | 1.97 | 17.2 | 1.89 | 8.63 | 0.69 | 18.7 | 1.49 |
| | 68 | 1.811 | 345 | 51.1 | 11.2 | 3.13 | 27.3 | 3.01 | 14.5 | 1.16 | 31.3 | 2.50 |
| | 97 | 2.583 | 345 | 34.3 | 22.7 | 6.37 | 55.7 | 6.12 | 31.6 | 2.53 | 68.3 | 5.46 |
| **152** | 33 | 0.879 | 230 | 167 | 1.65 | 0.46 | 3.99 | 0.44 | 1.48 | 0.12 | 3.14 | 0.25 |
| | 43 | 1.146 | 230 | 128 | 2.92 | 0.82 | 7.14 | 0.79 | 2.92 | 0.23 | 6.31 | 0.50 |
| | 54 | 1.438 | 345 | 101 | 7.01 | 1.96 | 17.2 | 1.89 | 7.64 | 0.61 | 16.5 | 1.32 |
| | 68 | 1.811 | 345 | 79.2 | 11.1 | 3.12 | 27.3 | 3.00 | 13.1 | 1.04 | 28.2 | 2.26 |
| | 97 | 2.583 | 345 | 54.0 | 22.7 | 6.36 | 55.6 | 6.12 | 29.1 | 2.33 | 63.0 | 5.04 |
| **203** | 43 | 1.146 | 230 | 172 | 2.91 | 0.82 | 7.13 | 0.78 | 2.54 | 0.20 | 5.47 | 0.44 |
| | 54 | 1.438 | 345 | 136 | 7.00 | 1.96 | 17.1 | 1.89 | 6.81 | 0.54 | 14.7 | 1.18 |
| | 68 | 1.811 | 345 | 107 | 11.1 | 3.12 | 27.2 | 3.00 | 11.9 | 0.95 | 25.7 | 2.05 |
| | 97 | 2.583 | 345 | 73.7 | 22.7 | 6.35 | 55.5 | 6.11 | 27.1 | 2.17 | 58.6 | 4.69 |
| **254** | 54 | 1.438 | 345 | 172 | 6.99 | 1.96 | 17.1 | 1.88 | 6.08 | 0.49 | 13.1 | 1.05 |
| | 68 | 1.811 | 345 | 135 | 11.1 | 3.11 | 27.2 | 2.99 | 10.8 | 0.87 | 23.4 | 1.88 |
| | 97 | 2.583 | 345 | 93.3 | 22.7 | 6.34 | 55.5 | 6.10 | 25.3 | 2.02 | 54.7 | 4.38 |
| **305** | 68 | 1.811 | 345 | 163 | 11.1 | 3.11 | 27.2 | 2.99 | 9.91 | 0.79 | 21.4 | 1.71 |
| | 97 | 2.583 | 345 | 113 | 22.6 | 6.34 | 55.4 | 6.10 | 23.7 | 1.90 | 51.3 | 4.10 |
| **356** | 68 | 1.811 | 345 | 191 | 11.1 | 3.10 | 27.1 | 2.99 | 9.05 | 0.72 | 19.6 | 1.57 |
| | 97 | 2.583 | 345 | 133 | 22.6 | 6.33 | 55.4 | 6.09 | 22.2 | 1.78 | 48.1 | 3.85 |

**NOTES:**

1. Factored end one flange web crippling resistance (EOF), $P_{reo} = P_{eo1} + P_{eo2}[N/t]^{1/2}$
2. Factored interior one flange web crippling resistance (IOF), $P_{rio} = P_{io1} + P_{io2}[N/t]^{1/2}$
3. Factored end two flange web crippling resistance (ETF), $P_{ret} = P_{et1} + P_{et2}[N/t]^{1/2}$
4. Factored interior two flange web crippling resistance (ITF), $P_{rit} = P_{it1} + P_{it2}[N/t]^{1/2}$

Bailey Metal Products, Dass Metal Products, DCM Metal Corp., EB Metal Inc., Imperial Building Products, Manugypse, Groupe UP, Trebor Building Products Ltd.

## S-Section Ceiling Span Tables

**Table Notes**

1 Values are for simple span conditions.
2 For "Unbraced" case, the factored moment resistance is based on Sections F2 and F3 of S136-16 with the unbraced length assumed to be the listed span.
3 For "Midspan" braced case, the factored moment resistance is based on Sections F2 and F3 of S136-16 with the unbraced length assumed to be half of the listed span.
4 Web crippling check is based on 25 mm of bearing at end supports.
5 Web criippling and shear capacity have not been reduced for punchouts. If web punchouts occur near supports, members must be checked for reduced shear and web crippling in accordance with S136-16.

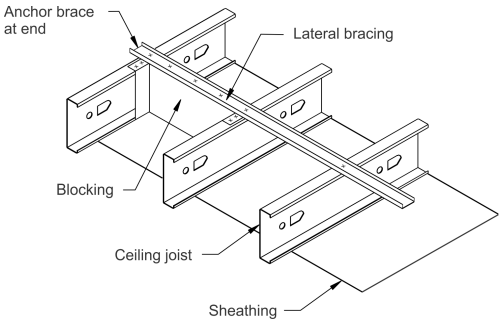


### LIMITING CEILING SPANS (m) - *L/240*

| Specified dead load | | 0.2 kPa | | | | | | 0.3 kPa | | | | | | 0.6 kPa | | | | | |
|---|---|---|---|---|---|---|---|---|---|---|---|---|---|---|---|---|---|---|---|
| | | Lateral Support of Compression Flange | | | | | | Lateral Support of Compression Flange | | | | | | Lateral Support of Compression Flange | | | | | |
| | | Unsupported | | | Midspan | | | Unsupported | | | Midspan | | | Unsupported | | | Midspan | | |
| Stud | $F_y$ | Joist Spacing (mm) o.c. | | | Joist Spacing (mm) o.c. | | | Joist Spacing (mm) o.c. | | | Joist Spacing (mm) o.c. | | | Joist Spacing (mm) o.c. | | | Joist Spacing (mm) o.c. | | |
| Designation | (Mpa) | 305 | 406 | 610 | 305 | 406 | 610 | 305 | 406 | 610 | 305 | 406 | 610 | 305 | 406 | 610 | 305 | 406 | 610 |
| 162S125-18 | 230 | 2.39 | 2.21 | 1.99 | 2.48 | 2.24 | 1.95 | 2.14 | 1.99 | 1.74 | 2.15 | 1.95 | 1.70 | 1.74 | 1.57 | 1.36 | 1.70 | 1.54 | 1.35 |
| 162S125-33 | 230 | 3.03 | 2.78 | 2.46 | 3.10 | 2.81 | 2.45 | 2.69 | 2.46 | 2.15 | 2.70 | 2.45 | 2.14 | 2.15 | 1.95 | 1.70 | 2.14 | 1.94 | 1.70 |
| 250S125-18 | 230 | 2.70 | 2.50 | 2.25 | 3.47 | 3.14 | 2.72 | 2.43 | 2.25 | 2.03 | 3.01 | 2.72 | 2.37 | 2.03 | 1.88 | 1.69e | 2.37 | 2.14e | 1.85e |
| 250S125-33 | 230 | 3.33 | 3.06 | 2.73 | 4.29 | 3.90 | 3.40 | 2.96 | 2.73 | 2.44 | 3.75 | 3.40 | 2.96 | 2.44 | 2.25 | 2.02 | 2.96 | 2.69 | 2.35 |
| 250S125-43 | 230 | 3.75 | 3.44 | 3.05 | 4.66 | 4.23 | 3.70 | 3.32 | 3.05 | 2.70 | 4.07 | 3.70 | 3.23 | 2.70 | 2.48 | 2.21 | 3.23 | 2.93 | 2.56 |
| 362S125-18 | 230 | 3.01 | 2.80 | 2.52 | 4.02 | 3.69 | 3.22 | 2.71 | 2.52 | 2.27 | 3.56 | 3.22 | 2.76e | 2.27 | 2.11e | 1.90e | 2.76e | 2.45e | 2.05e |
| 362S125-33 | 230 | 3.65 | 3.37 | 3.01 | 5.12 | 4.72 | 4.21 | 3.26 | 3.01 | 2.70 | 4.56 | 4.21 | 3.77 | 2.70 | 2.50 | 2.24 | 3.77 | 3.46 | 2.99 |
| 362S125-43 | 230 | 4.06 | 3.73 | 3.32 | 5.62 | 5.19 | 4.63 | 3.61 | 3.32 | 2.96 | 5.02 | 4.63 | 4.14 | 2.96 | 2.73 | 2.44 | 4.14 | 3.81 | 3.35 |
| 362S162-33 | 230 | 4.67 | 4.32 | 3.87 | 6.25 | 5.68 | 4.96 | 4.18 | 3.87 | 3.48 | 5.46 | 4.96 | 4.34 | 3.48 | 3.23 | 2.90 | 4.34 | 3.94 | 3.44 |
| 362S162-43 | 230 | 5.15 | 4.74 | 4.23 | 6.80 | 6.18 | 5.40 | 4.59 | 4.23 | 3.79 | 5.94 | 5.40 | 4.72 | 3.79 | 3.50 | 3.14 | 4.72 | 4.29 | 3.74 |
| 400S125-18 | 230 | 3.10 | 2.88 | 2.60 | 4.15 | 3.80 | 3.34 | 2.80 | 2.60 | 2.34 | 3.67 | 3.34 | 2.87e | 2.34 | 2.18e | 1.96e | 2.87e | 2.56e | 2.15e |
| 400S125-33 | 230 | 3.74 | 3.46 | 3.09 | 5.25 | 4.85 | 4.32 | 3.34 | 3.09 | 2.77 | 4.69 | 4.32 | 3.87 | 2.77 | 2.57 | 2.31 | 3.87 | 3.57 | 3.11 |
| 400S125-43 | 230 | 4.16 | 3.82 | 3.40 | 5.77 | 5.32 | 4.75 | 3.69 | 3.40 | 3.03 | 5.15 | 4.75 | 4.25 | 3.03 | 2.80 | 2.50 | 4.25 | 3.92 | 3.47 |
| 400S162-33 | 230 | 4.79 | 4.43 | 3.98 | 6.75 | 6.13 | 5.35 | 4.29 | 3.98 | 3.57 | 5.89 | 5.35 | 4.68 | 3.57 | 3.31 | 2.98 | 4.68 | 4.25 | 3.71 |
| 400S162-43 | 230 | 5.27 | 4.86 | 4.34 | 7.34 | 6.67 | 5.83 | 4.70 | 4.34 | 3.88 | 6.41 | 5.83 | 5.09 | 3.88 | 3.59 | 3.22 | 5.09 | 4.62 | 4.04 |
| 600S125-33 | 230 | 4.18 | 3.87 | 3.47 | 5.98 | 5.55 | 5.00 | 3.75 | 3.47 | 3.12 | 5.38 | 5.00 | 4.48 | 3.12 | 2.89 | 2.60 | 4.48 | 4.13 | 3.70 |
| 600S125-43 | 230 | 4.58 | 4.23 | 3.78 | 6.48 | 5.99 | 5.38 | 4.09 | 3.78 | 3.38 | 5.81 | 5.38 | 4.83 | 3.38 | 3.13 | 2.80 | 4.83 | 4.48 | 4.03 |
| 600S162-33 | 230 | 5.35 | 4.95 | 4.46 | 7.70 | 7.15 | 6.45 | 4.80 | 4.46 | 4.01 | 6.94 | 6.45 | 5.81 | 4.01 | 3.72 | 3.35 | 5.81 | 5.40 | 4.83e |
| 600S162-43 | 230 | 5.83 | 5.39 | 4.83 | 8.31 | 7.70 | 6.92 | 5.22 | 4.83 | 4.33 | 7.46 | 6.92 | 6.23 | 4.33 | 4.01 | 3.61 | 6.23 | 5.78 | 5.20 |

NOTE: "e" indicates that web stiffeners are required at ends.

### LIMITING CEILING SPANS (m) - *L/360*

| Specified dead load | | 0.2 kPa | | | | | | 0.3 kPa | | | | | | 0.6 kPa | | | | | |
|---|---|---|---|---|---|---|---|---|---|---|---|---|---|---|---|---|---|---|---|
| | | Lateral Support of Compression Flange | | | | | | Lateral Support of Compression Flange | | | | | | Lateral Support of Compression Flange | | | | | |
| | | Unsupported | | | Midspan | | | Unsupported | | | Midspan | | | Unsupported | | | Midspan | | |
| Stud | $F_y$ | Joist Spacing (mm) o.c. | | | Joist Spacing (mm) o.c. | | | Joist Spacing (mm) o.c. | | | Joist Spacing (mm) o.c. | | | Joist Spacing (mm) o.c. | | | Joist Spacing (mm) o.c. | | |
| Designation | (MPa) | 305 | 406 | 610 | 305 | 406 | 610 | 305 | 406 | 610 | 305 | 406 | 610 | 305 | 406 | 610 | 305 | 406 | 610 |
| 162S125-18 | 230 | 2.23 | 2.02 | 1.76 | 2.16 | 1.96 | 1.70 | 1.94 | 1.76 | 1.52 | 1.88 | 1.70 | 1.48 | 1.52 | 1.38 | 1.19 | 1.48 | 1.35 | 1.18 |
| 162S125-33 | 230 | 2.71 | 2.46 | 2.15 | 2.70 | 2.45 | 2.14 | 2.36 | 2.15 | 1.88 | 2.36 | 2.14 | 1.87 | 1.88 | 1.71 | 1.49 | 1.87 | 1.70 | 1.48 |
| 250S125-18 | 230 | 2.70 | 2.50 | 2.25 | 3.03 | 2.74 | 2.38 | 2.43 | 2.25 | 2.03 | 2.63 | 2.38 | 2.07 | 2.03 | 1.88 | 1.67e | 2.07 | 1.87 | 1.63e |
| 250S125-33 | 230 | 3.33 | 3.06 | 2.73 | 3.75 | 3.40 | 2.97 | 2.96 | 2.73 | 2.44 | 3.27 | 2.97 | 2.59 | 2.44 | 2.25 | 2.02 | 2.59 | 2.35 | 2.05 |
| 250S125-43 | 230 | 3.75 | 3.44 | 3.05 | 4.07 | 3.70 | 3.23 | 3.32 | 3.05 | 2.70 | 3.55 | 3.23 | 2.82 | 2.70 | 2.48 | 2.21 | 2.82 | 2.56 | 2.24 |
| 362S125-18 | 230 | 3.01 | 2.80 | 2.52 | 4.02 | 3.68 | 3.18 | 2.71 | 2.52 | 2.27 | 3.52 | 3.18 | 2.76e | 2.27 | 2.11e | 1.90e | 2.76e | 2.45e | 2.05e |
| 362S125-33 | 230 | 3.65 | 3.37 | 3.01 | 4.99 | 4.54 | 3.96 | 3.26 | 3.01 | 2.70 | 4.36 | 3.96 | 3.46 | 2.70 | 2.50 | 2.24 | 3.46 | 3.14 | 2.74 |
| 362S125-43 | 230 | 4.06 | 3.73 | 3.32 | 5.43 | 4.93 | 4.31 | 3.61 | 3.32 | 2.96 | 4.74 | 4.31 | 3.76 | 2.96 | 2.73 | 2.44 | 3.76 | 3.42 | 2.99 |
| 362S162-33 | 230 | 4.67 | 4.32 | 3.87 | 5.46 | 4.96 | 4.34 | 4.18 | 3.87 | 3.48 | 4.77 | 4.34 | 3.79 | 3.48 | 3.23 | 2.90 | 3.79 | 3.44 | 3.01 |
| 362S162-43 | 230 | 5.15 | 4.74 | 4.23 | 5.94 | 5.40 | 4.72 | 4.59 | 4.23 | 3.79 | 5.19 | 4.72 | 4.12 | 3.79 | 3.50 | 3.14 | 4.12 | 3.74 | 3.27 |
| 400S125-18 | 230 | 3.10 | 2.88 | 2.60 | 4.15 | 3.80 | 3.34 | 2.80 | 2.60 | 2.34 | 3.67 | 3.34 | 2.87e | 2.34 | 2.18e | 1.96e | 2.87e | 2.56e | 2.15e |
| 400S125-33 | 230 | 3.74 | 3.46 | 3.09 | 5.25 | 4.85 | 4.28 | 3.34 | 3.09 | 2.77 | 4.69 | 4.28 | 3.74 | 2.77 | 2.57 | 2.31 | 3.74 | 3.39 | 2.96 |
| 400S125-43 | 230 | 4.16 | 3.82 | 3.40 | 5.77 | 5.32 | 4.65 | 3.69 | 3.40 | 3.03 | 5.12 | 4.65 | 4.07 | 3.03 | 2.80 | 2.50 | 4.07 | 3.69 | 3.23 |
| 400S162-33 | 230 | 4.79 | 4.43 | 3.98 | 5.89 | 5.35 | 4.68 | 4.29 | 3.98 | 3.57 | 5.15 | 4.68 | 4.09 | 3.57 | 3.31 | 2.98 | 4.09 | 3.71 | 3.24 |
| 400S162-43 | 230 | 5.27 | 4.86 | 4.34 | 6.41 | 5.83 | 5.09 | 4.70 | 4.34 | 3.88 | 5.60 | 5.09 | 4.45 | 3.88 | 3.59 | 3.22 | 4.45 | 4.04 | 3.53 |
| 600S125-33 | 230 | 4.18 | 3.87 | 3.47 | 5.98 | 5.55 | 5.00 | 3.75 | 3.47 | 3.12 | 5.38 | 5.00 | 4.48 | 3.12 | 2.89 | 2.60 | 4.48 | 4.13 | 3.70 |
| 600S125-43 | 230 | 4.58 | 4.23 | 3.78 | 6.48 | 5.99 | 5.38 | 4.09 | 3.78 | 3.38 | 5.81 | 5.38 | 4.83 | 3.38 | 3.13 | 2.80 | 4.83 | 4.48 | 4.03 |
| 600S162-33 | 230 | 5.35 | 4.95 | 4.46 | 7.70 | 7.15 | 6.42 | 4.80 | 4.46 | 4.01 | 6.94 | 6.42 | 5.61 | 4.01 | 3.72 | 3.35 | 5.61 | 5.10 | 4.45e |
| 600S162-43 | 230 | 5.83 | 5.39 | 4.83 | 8.31 | 7.70 | 6.92 | 5.22 | 4.83 | 4.33 | 7.46 | 6.92 | 6.11 | 4.33 | 4.01 | 3.61 | 6.11 | 5.55 | 4.85 |

NOTE: "e" indicates that web stiffeners are required at ends.

Bailey Metal Products, Dass Metal Products, DCM Metal Corp., EB Métal Inc., Imperial Building Products, Manugypse, Groupe UP, Trebor Building Products Ltd.

## U-Channel Section Properties

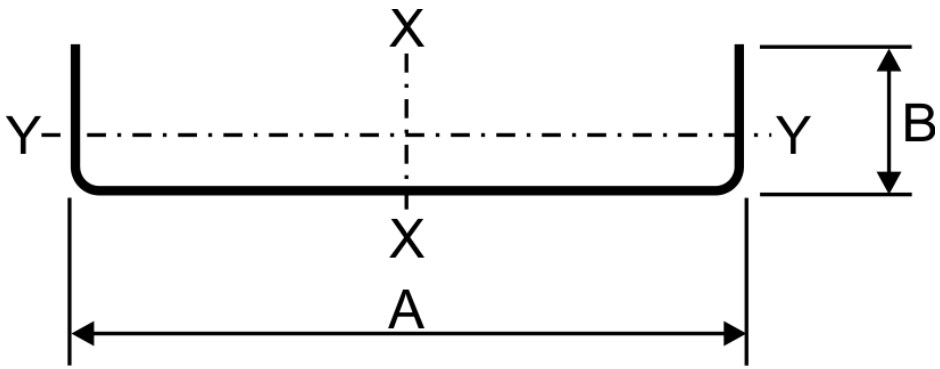


Note: Inside bend radius taken as 2.38 mm.

| Section Designation | Base Design Thickness (mm) | Depth A (mm) | Flange B (mm) | $F_y$ (MPa) | GROSS | | | | | | | EFFECTIVE | | |
|---|---|---|---|---|---|---|---|---|---|---|---|---|---|---|
| | | | | | Mass (kg/m) | Area (E+03) ($mm^2$) | $I_x$ (E+06) ($mm^4$) | $r_x$ (mm) | $I_y$ (E+06) ($mm^4$) | $r_y$ (mm) | $V_{rg}$ (kN) | $I_{xd}$ (E+06) ($mm^4$) | $S_{xe}$ (E+03) ($mm^3$) | $M_{rx}$ (kN-m) |
| **75U50-54** | 1.438 | 19.1 | 12.7 | 230 | 0.440 | 0.0562 | 0.00302 | 7.34 | 0.000878 | 3.96 | 1.86 | 0.00302 | 0.318 | 0.0776 |
| **75U50-54** | 1.438 | 19.1 | 12.7 | 345 | 0.440 | 0.0562 | 0.00302 | 7.34 | 0.000878 | 3.96 | 2.82 | 0.00302 | 0.318 | 0.1150 |
| **150U50-43** | 1.146 | 38.1 | 12.7 | 230 | 0.531 | 0.0677 | 0.0135 | 14.1 | 0.000941 | 3.73 | 4.03 | 0.01347 | 0.706 | 0.1678 |
| **150U50-43** | 1.146 | 38.1 | 12.7 | 345 | 0.531 | 0.0677 | 0.0135 | 14.1 | 0.000941 | 3.73 | 6.10 | 0.01347 | 0.706 | 0.2494 |
| **150U50-54** | 1.438 | 38.1 | 12.7 | 230 | 0.656 | 0.0836 | 0.0162 | 13.9 | 0.001132 | 3.68 | 4.85 | 0.01622 | 0.852 | 0.2085 |
| **150U50-54** | 1.438 | 38.1 | 12.7 | 345 | 0.656 | 0.0836 | 0.0162 | 13.9 | 0.001132 | 3.68 | 7.35 | 0.01622 | 0.852 | 0.3088 |
| **150U75-54** | 1.438 | 38.1 | 19.1 | 230 | 0.799 | 0.1019 | 0.0224 | 14.8 | 0.003600 | 5.94 | 4.85 | 0.02236 | 1.17 | 0.2724 |
| **150U75-54** | 1.438 | 38.1 | 19.1 | 345 | 0.799 | 0.1019 | 0.0224 | 14.8 | 0.003600 | 5.94 | 7.35 | 0.02236 | 1.16 | 0.3586 |
| **200U50-54** | 1.438 | 50.8 | 12.7 | 230 | 0.799 | 0.1019 | 0.0331 | 18.0 | 0.001223 | 3.4798 | 6.85 | 0.03313 | 1.30 | 0.3197 |
| **250U50-54** | 1.438 | 63.5 | 12.7 | 230 | 0.943 | 0.1201 | 0.0583 | 22.0 | 0.001290 | 3.2766 | 8.84 | 0.05830 | 1.84 | 0.4497 |

**NOTE:** Cold work of forming is applied when applicable.

Bailey Metal Products, Dass Metal Products, DCM Metal Corp., EB Metal Inc., Imperial Building Products, Manugypse, Groupe UP, Trebor Building Products Ltd.

## U-Channel Ceiling Span Tables

### Table Notes

1 Multiple span indicates two or more equal spans continuous over interior supports.
2 Compression flanges assumed unbraced.
3 Web crippling based on 19 mm bearing at end and interior supports.

### Limiting Ceiling Spans of U-Channels (m) - *L/240*

| Specified dead loads | | | 0.20 kPa | | | | | 0.30 kPa | | | | | 0.60 kPa | | | | | 0.70 kPa | | | | |
|---|---|---|---|---|---|---|---|---|---|---|---|---|---|---|---|---|---|---|---|---|---|---|
| Section | $F_y$ | Span | Spacing (m) o.c. | | | | | Spacing (m) o.c. | | | | | Spacing (m) o.c. | | | | | Spacing (m) o.c. | | | | |
| Designation | (MPa) | Type | 0.60 | 1.00 | 1.20 | 1.50 | 1.80 | 0.60 | 1.00 | 1.20 | 1.50 | 1.80 | 0.60 | 1.00 | 1.20 | 1.50 | 1.80 | 0.60 | 1.00 | 1.20 | 1.50 | 1.80 |
| 75U050-54 | 230 | Single | 1.18 | 0.99 | 0.94 | 0.87 | 0.82 | 1.03 | 0.87 | 0.82 | 0.76 | 0.71 | 0.82 | 0.69 | 0.65 | 0.60 | 0.57 | 0.78 | 0.66 | 0.62 | 0.57 | 0.54 |
| | 230 | Multiple | 1.46 | 1.23 | 1.16 | 1.07 | 1.01 | 1.27 | 1.07 | 1.01 | 0.94 | 0.88 | 1.01 | 0.85 | 0.80 | 0.74 | 0.68 | 0.96 | 0.81 | 0.76 | 0.69 | 0.63 |
| 150U050-54 | 230 | Single | 1.79 | 1.51 | 1.42 | 1.32 | 1.25 | 1.56 | 1.32 | 1.25 | 1.16 | 1.09 | 1.25 | 1.06 | 0.99 | 0.93 | 0.87 | 1.18 | 1.00 | 0.95 | 0.88 | 0.83 |
| | 230 | Multiple | 2.29 | 1.93 | 1.82 | 1.69 | 1.59 | 2.00 | 1.69 | 1.59 | 1.48 | 1.39 | 1.59 | 1.34 | 1.27 | 1.18 | 1.10 | 1.51 | 1.28 | 1.20 | 1.11 | 1.03 |
| 200U050-54 | 230 | Single | 1.88 | 1.59 | 1.50 | 1.39 | 1.31 | 1.64 | 1.39 | 1.31 | 1.22 | 1.15 | 1.31 | 1.11 | 1.05 | 0.98 | 0.92 | 1.25 | 1.06 | 1.00 | 0.93 | 0.88 |
| | 230 | Multiple | 2.40 | 2.02 | 1.91 | 1.77 | 1.67 | 2.10 | 1.77 | 1.67 | 1.55 | 1.46 | 1.67 | 1.41 | 1.33 | 1.24 | 1.17 | 1.59 | 1.35 | 1.27 | 1.18 | 1.11 |
| 250U050-54 | 230 | Single | 1.95 | 1.65 | 1.56 | 1.45 | 1.37 | 1.71 | 1.45 | 1.37 | 1.27 | 1.20 | 1.37 | 1.16 | 1.10 | 1.02 | 0.97 | 1.30 | 1.11 | 1.05 | 0.98 | 0.92 |
| | 230 | Multiple | 2.49 | 2.10 | 1.98 | 1.84 | 1.74 | 2.18 | 1.84 | 1.74 | 1.62 | 1.52 | 1.74 | 1.47 | 1.39 | 1.29 | 1.22 | 1.65 | 1.40 | 1.32 | 1.23 | 1.16 |

### Limiting Ceiling Spans of U-Channels (m) - *L/360*

| Specified dead loads | | | 0.20 kPa | | | | | 0.30 kPa | | | | | 0.60 kPa | | | | | 0.70 kPa | | | | |
|---|---|---|---|---|---|---|---|---|---|---|---|---|---|---|---|---|---|---|---|---|---|---|
| Section | $F_y$ | Span | Spacing (m) o.c. | | | | | Spacing (m) o.c. | | | | | Spacing (m) o.c. | | | | | Spacing (m) o.c. | | | | |
| Designation | (MPa) | Type | 0.60 | 1.00 | 1.20 | 1.50 | 1.80 | 0.60 | 1.00 | 1.20 | 1.50 | 1.80 | 0.60 | 1.00 | 1.20 | 1.50 | 1.80 | 0.60 | 1.00 | 1.20 | 1.50 | 1.80 |
| 75U050-54 | 230 | Single | 1.03 | 0.87 | 0.82 | 0.76 | 0.71 | 0.90 | 0.76 | 0.71 | 0.66 | 0.62 | 0.71 | 0.60 | 0.57 | 0.53 | 0.50 | 0.68 | 0.57 | 0.54 | 0.50 | 0.47 |
| | 230 | Multiple | 1.27 | 1.07 | 1.01 | 0.94 | 0.88 | 1.11 | 0.94 | 0.88 | 0.82 | 0.77 | 0.88 | 0.74 | 0.70 | 0.65 | 0.61 | 0.84 | 0.71 | 0.67 | 0.62 | 0.58 |
| 150U050-54 | 230 | Single | 1.79 | 1.51 | 1.42 | 1.32 | 1.25 | 1.56 | 1.32 | 1.25 | 1.16 | 1.09 | 1.25 | 1.05 | 0.99 | 0.92 | 0.87 | 1.18 | 1.00 | 0.94 | 0.88 | 0.82 |
| | 230 | Multiple | 2.23 | 1.88 | 1.77 | 1.64 | 1.55 | 1.95 | 1.64 | 1.55 | 1.43 | 1.35 | 1.55 | 1.30 | 1.23 | 1.14 | 1.07 | 1.47 | 1.24 | 1.17 | 1.08 | 1.02 |
| 200U050-54 | 230 | Single | 1.88 | 1.59 | 1.50 | 1.39 | 1.31 | 1.64 | 1.39 | 1.31 | 1.22 | 1.15 | 1.31 | 1.11 | 1.05 | 0.98 | 0.92 | 1.25 | 1.06 | 1.00 | 0.93 | 0.88 |
| | 230 | Multiple | 2.40 | 2.02 | 1.91 | 1.77 | 1.67 | 2.10 | 1.77 | 1.67 | 1.55 | 1.46 | 1.67 | 1.41 | 1.33 | 1.24 | 1.17 | 1.59 | 1.35 | 1.27 | 1.18 | 1.11 |
| 250U050-54 | 230 | Single | 1.95 | 1.65 | 1.56 | 1.45 | 1.37 | 1.71 | 1.45 | 1.37 | 1.27 | 1.20 | 1.37 | 1.16 | 1.10 | 1.02 | 0.97 | 1.30 | 1.11 | 1.05 | 0.98 | 0.92 |
| | 230 | Multiple | 2.49 | 2.10 | 1.98 | 1.84 | 1.74 | 2.18 | 1.84 | 1.74 | 1.62 | 1.52 | 1.74 | 1.47 | 1.39 | 1.29 | 1.22 | 1.65 | 1.40 | 1.32 | 1.23 | 1.16 |

Bailey Metal Products, Dass Metal Products, DCM Metal Corp., EB Metal Inc., Imperial Building Products, Manugypse, Groupe UP, Trebor Building Products Ltd.

## Furring Channel Section Properties

### Table Notes

1 If present, hems and offsets in flanges are ignored.
2 Effective properties are the minimum for positive and negative bending.

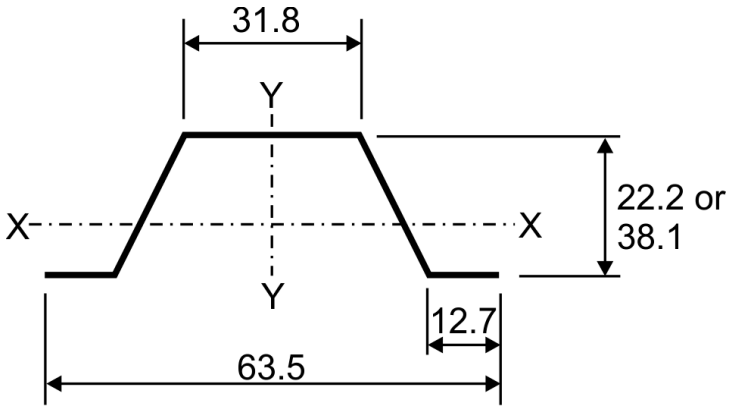


All dimensions in mm

| Section Designation | Base Design Thickness (mm) | $F_y$ (MPa) | GROSS Mass (kg/m) | GROSS Area (E+03) ($mm^2$) | GROSS $I_x$ (E+06) ($mm^4$) | GROSS $r_x$ (mm) | GROSS $I_y$ (E+06) ($mm^4$) | GROSS $r_y$ (mm) | Effective $I_{xd}$ (E+06) ($mm^4$) | Effective $S_{xe}$ (E+03) ($mm^3$) | Effective $M_{rx}$ (kN-m) |
|---|---|---|---|---|---|---|---|---|---|---|---|
| **087F125-18** | 0.478 | 230 | 0.365 | 0.0465 | 0.00380 | 9.04 | 0.0150 | 18.0 | 0.00370 | 0.265 | 0.0545 |
| **087F125-27** | 0.719 | 230 | 0.545 | 0.0694 | 0.00555 | 8.94 | 0.0223 | 17.9 | 0.00555 | 0.451 | 0.0922 |
| **087F125-30** | 0.792 | 230 | 0.598 | 0.0762 | 0.00606 | 8.92 | 0.0244 | 17.9 | 0.00606 | 0.508 | 0.104 |
| **087F125-33** | 0.879 | 230 | 0.661 | 0.0843 | 0.00664 | 8.89 | 0.0270 | 17.9 | 0.00664 | 0.562 | 0.115 |
| **087F125-43** | 1.146 | 230 | 0.853 | 0.109 | 0.00836 | 8.76 | 0.0346 | 17.9 | 0.00836 | 0.708 | 0.145 |
| **150F125-18** | 0.478 | 230 | 0.481 | 0.0613 | 0.01311 | 14.6 | 0.0194 | 17.8 | 0.0128 | 0.567 | 0.116 |
| **150F125-27** | 0.719 | 230 | 0.719 | 0.0916 | 0.01933 | 14.5 | 0.0288 | 17.7 | 0.0193 | 0.939 | 0.192 |
| **150F125-30** | 0.792 | 230 | 0.792 | 0.101 | 0.02117 | 14.5 | 0.0316 | 17.7 | 0.0212 | 1.06 | 0.216 |
| **150F125-33** | 0.879 | 230 | 0.875 | 0.111 | 0.02331 | 14.5 | 0.0349 | 17.7 | 0.0233 | 1.17 | 0.238 |
| **150F125-43** | 1.146 | 230 | 1.13 | 0.144 | 0.02969 | 14.4 | 0.0448 | 17.6 | 0.0297 | 1.49 | 0.304 |

Bailey Metal Products, Dass Metal Products, DCM Metal Corp., EB Métal Inc., Imperial Building Products, Manugypse, Groupe UP, Trebor Building Products Ltd.

## Furring Channel Ceiling Span Tables

### Table Notes

1 Single spans are the minimum span based on moment, shear, web crippling, or deflection.
2 Multiple spans are for two or more equal continuous spans with span length measured from support to support.
3 Web crippling check is based on a bearing length of 25 mm at end and interior supports.
4 Multiple spans are the minimum span based on moment, shear, web crippling, combined bending and shear, combined bending and web crippling, or deflection.

### Limiting Ceiling Spans of Furring Channels (m) - *L/240*

| Specified dead loads | | | 0.20 kPa | | | 0.30 kPa | | | 0.60 kPa | | |
|---|---|---|---|---|---|---|---|---|---|---|---|
| Section Designation | $F_y$ (MPa) | Span Type | Spacing (mm) o.c. 305 | 406 | 610 | Spacing (mm) o.c. 305 | 406 | 610 | Spacing (mm) o.c. 305 | 406 | 610 |
| 087F125-18 | 230 | Single | 1.58 | 1.43 | 1.25 | 1.38 | 1.25 | 1.09 | 1.09 | 0.99 | 0.87 |
| | 230 | Multiple | 1.95 | 1.77 | 1.55 | 1.70 | 1.55 | 1.35 | 1.35 | 1.20 | 0.98 |
| 087F125-27 | 230 | Single | 1.81 | 1.64 | 1.44 | 1.58 | 1.44 | 1.25 | 1.25 | 1.14 | 1.00 |
| | 230 | Multiple | 2.23 | 2.03 | 1.77 | 1.95 | 1.77 | 1.55 | 1.55 | 1.41 | 1.23 |
| 087F125-30 | 230 | Single | 1.86 | 1.69 | 1.48 | 1.63 | 1.48 | 1.29 | 1.29 | 1.17 | 1.02 |
| | 230 | Multiple | 2.30 | 2.09 | 1.83 | 2.01 | 1.83 | 1.60 | 1.60 | 1.45 | 1.27 |
| 087F125-33 | 230 | Single | 1.92 | 1.74 | 1.52 | 1.68 | 1.52 | 1.33 | 1.33 | 1.21 | 1.06 |
| | 230 | Multiple | 2.37 | 2.16 | 1.88 | 2.07 | 1.88 | 1.65 | 1.65 | 1.49 | 1.31 |
| 087F125-43 | 230 | Single | 2.07 | 1.88 | 1.65 | 1.81 | 1.65 | 1.44 | 1.44 | 1.31 | 1.14 |
| | 230 | Multiple | 2.56 | 2.33 | 2.03 | 2.24 | 2.03 | 1.78 | 1.78 | 1.61 | 1.41 |
| 150F125-18 | 230 | Single | 2.39 | 2.17 | 1.90 | 2.09 | 1.90 | 1.66 | 1.66 | 1.51 | 1.32 |
| | 230 | Multiple | 2.95 | 2.68 | 2.34 | 2.58 | 2.34 | 2.02 | 2.02 | 1.75 | 1.43 |
| 150F125-27 | 230 | Single | 2.74 | 2.49 | 2.18 | 2.39 | 2.18 | 1.90 | 1.90 | 1.73 | 1.51 |
| | 230 | Multiple | 3.39 | 3.08 | 2.69 | 2.96 | 2.69 | 2.35 | 2.35 | 2.13 | 1.83 |
| 150F125-30 | 230 | Single | 2.83 | 2.57 | 2.24 | 2.47 | 2.24 | 1.96 | 1.96 | 1.78 | 1.56 |
| | 230 | Multiple | 3.49 | 3.17 | 2.77 | 3.05 | 2.77 | 2.42 | 2.42 | 2.20 | 1.92 |
| 150F125-33 | 230 | Single | 2.92 | 2.65 | 2.32 | 2.55 | 2.32 | 2.02 | 2.02 | 1.84 | 1.61 |
| | 230 | Multiple | 3.61 | 3.28 | 2.86 | 3.15 | 2.86 | 2.50 | 2.50 | 2.27 | 1.98 |
| 150F125-43 | 230 | Single | 3.16 | 2.87 | 2.51 | 2.76 | 2.51 | 2.19 | 2.19 | 1.99 | 1.74 |
| | 230 | Multiple | 3.91 | 3.55 | 3.10 | 3.41 | 3.10 | 2.71 | 2.71 | 2.46 | 2.15 |

### Limiting Ceiling Spans of Furring Channels (m) - *L/360*

| Specified dead loads | | | 0.20 kPa | | | 0.30 kPa | | | 0.60 kPa | | |
|---|---|---|---|---|---|---|---|---|---|---|---|
| Section Designation | $F_y$ (MPa) | Span Type | Spacing (mm) o.c. 305 | 406 | 610 | Spacing (mm) o.c. 305 | 406 | 610 | Spacing (mm) o.c. 305 | 406 | 610 |
| 087F125-18 | 230 | Single | 1.38 | 1.25 | 1.09 | 1.21 | 1.09 | 0.96 | 0.96 | 0.87 | 0.76 |
| | 230 | Multiple | 1.70 | 1.55 | 1.35 | 1.49 | 1.35 | 1.18 | 1.18 | 1.07 | 0.94 |
| 087F125-27 | 230 | Single | 1.58 | 1.44 | 1.25 | 1.38 | 1.25 | 1.10 | 1.10 | 1.00 | 0.87 |
| | 230 | Multiple | 1.95 | 1.77 | 1.55 | 1.71 | 1.55 | 1.35 | 1.35 | 1.23 | 1.07 |
| 087F125-30 | 230 | Single | 1.63 | 1.48 | 1.29 | 1.42 | 1.29 | 1.13 | 1.13 | 1.02 | 0.90 |
| | 230 | Multiple | 2.01 | 1.83 | 1.60 | 1.76 | 1.60 | 1.39 | 1.39 | 1.27 | 1.11 |
| 087F125-33 | 230 | Single | 1.68 | 1.52 | 1.33 | 1.47 | 1.33 | 1.16 | 1.16 | 1.06 | 0.92 |
| | 230 | Multiple | 2.07 | 1.88 | 1.65 | 1.81 | 1.65 | 1.44 | 1.44 | 1.31 | 1.14 |
| 087F125-43 | 230 | Single | 1.81 | 1.65 | 1.44 | 1.58 | 1.44 | 1.26 | 1.26 | 1.14 | 1.00 |
| | 230 | Multiple | 2.24 | 2.03 | 1.78 | 1.95 | 1.78 | 1.55 | 1.55 | 1.41 | 1.23 |
| 150F125-18 | 230 | Single | 2.09 | 1.90 | 1.66 | 1.82 | 1.66 | 1.45 | 1.45 | 1.32 | 1.15 |
| | 230 | Multiple | 2.58 | 2.34 | 2.05 | 2.25 | 2.05 | 1.79 | 1.79 | 1.63 | 1.42 |
| 150F125-27 | 230 | Single | 2.39 | 2.18 | 1.90 | 2.09 | 1.90 | 1.66 | 1.66 | 1.51 | 1.32 |
| | 230 | Multiple | 2.96 | 2.69 | 2.35 | 2.58 | 2.35 | 2.05 | 2.05 | 1.86 | 1.63 |
| 150F125-30 | 230 | Single | 2.47 | 2.24 | 1.96 | 2.16 | 1.96 | 1.71 | 1.71 | 1.56 | 1.36 |
| | 230 | Multiple | 3.05 | 2.77 | 2.42 | 2.66 | 2.42 | 2.12 | 2.12 | 1.92 | 1.68 |
| 150F125-33 | 230 | Single | 2.55 | 2.32 | 2.02 | 2.23 | 2.02 | 1.77 | 1.77 | 1.61 | 1.40 |
| | 230 | Multiple | 3.15 | 2.86 | 2.50 | 2.75 | 2.50 | 2.18 | 2.18 | 1.98 | 1.73 |
| 150F125-43 | 230 | Single | 2.76 | 2.51 | 2.19 | 2.41 | 2.19 | 1.92 | 1.92 | 1.74 | 1.52 |
| | 230 | Multiple | 3.41 | 3.10 | 2.71 | 2.98 | 2.71 | 2.37 | 2.37 | 2.15 | 1.88 |

Bailey Metal Products, Dass Metal Products, DCM Metal Corp., EB Métal Inc., Imperial Building Products, Manugypse, Groupe UP, Trebor Building Products Ltd.