NBCC 2015

Design Load Criteria for Steel Building Systems



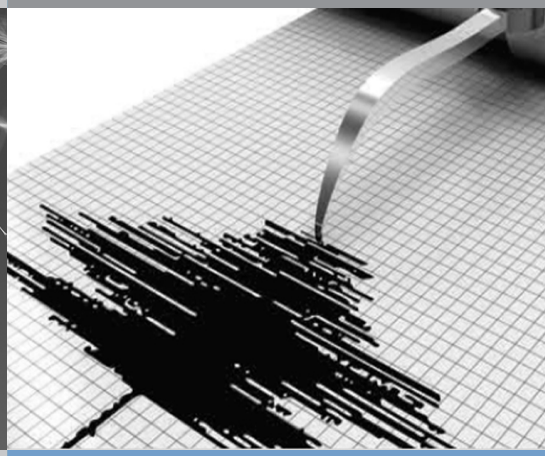

Canadian Sheet Steel Building Institute

CSSBI B15-17
April 2017

NBCC 2015 Design Load Criteria for Steel Building Systems

Preface

One of the objects of the CSSBI and its members is the development of standards that promote safety, performance and good practice. This bulletin is published as a guide for designers, specifiers and users of Steel Building Systems (SBS) and as a reference for building code officials and other authorities. The purpose of this bulletin is to present the *National Building Code of Canada 2015* (NBCC 2015) loading requirements in a format that is easy to understand. Illustrative examples are included to assist. The focus is on Steel Building Systems, however, the loading criteria are applicable to most low rise building construction.

Much of the content of this Bulletin is taken directly from the NBCC 2015 (Part 4 of Division B), and has been expanded upon where additional explanation was considered helpful for understanding the application of the load provisions. The NBCC is a model document used by the provinces and territories of Canada in the preparation of their own building codes, which are the governing legislation for building construction. For specific designs, the loading criteria presented in this Bulletin should be checked against the requirements of the applicable building code.

The material presented herein has been prepared for the general information of the reader and care has been taken to ensure that this Bulletin is a reasonable interpretation of the applicable code requirements. While the material is believed to be technically correct and in accordance with recognized practice at the time of publication, it does not obviate the need to determine its suitability for a given situation. Neither the CANADIAN SHEET STEEL BUILDING INSTITUTE nor its Members warrant or assume liability for the suitability of this bulletin for any general or particular application.

Reference Documents

Buildings Incorporating Steel Building Systems: Responsibilities of the Parties Involved, CSSBI B8-15, Canadian Sheet Steel Building Institute, Cambridge, ON

Crane Supporting Steel Structures: Design Guide, 3rd Edition, Canadian Institute of Steel Construction, Markham, ON, 2015

Metal Building Systems Manual, Metal Building Manufacturers Association, 2012

National Building Code of Canada 2015, National Research Council of Canada, Ottawa, ON

CSSBI
Canadian Sheet Steel Building Institute

Contents

Contents *continued*

Tables

Figures

1 Structural Loads

The NBCC outlines the minimum loads for which a building is to be designed to support. These loads are categorized as: Live, Dead and Environmental (snow, wind and earthquake).

1.1 Importance Categories

For the purposes of determining the wind, snow and earthquake loading requirements in accordance with NBCC 2015, the building must be assigned an Importance Category based on the intended use and occupancy. These categories are presented in the Table 1-1 (reproduced from NBCC Table 4.1.2.1).

Table 1-1: Importance Categories for Buildings

Use and Occupancy	Importance Category
Buildings that represent a low direct or indirect hazard to human life in the event of failure, including: • low human-occupancy buildings, where it can be shown that collapse is not likely to cause injury or other serious consequences • minor storage buildings	Low[1]
All buildings except those listed in Importance Categories Low, High and Post-disaster	Normal
Buildings that are likely to be used as post-disaster shelters, including buildings whose primary use is: • as an elementary, middle or secondary school • as a community centre • Manufacturing and storage facilities containing toxic, explosive or other hazardous substances in sufficient quantities to be dangerous to the public if released	High
Post-disaster buildings and buildings that are essential to the provision of services in the event of a disaster, and include: • hospitals, emergency treatment facilities and blood banks • telephone exchanges • power generating stations and electrical substations • control centres for air, land and marine transportation • public water treatment facilities and buildings having critical national defense functions • Buildings of the following type, unless exempted from this designation by the authority having jurisdiction: - emergence response facilities - fire, rescue and police stations, and housing for vehicles, aircraft or boats used for such purposes - communications facilities, including radio and television studios	Post-disaster

[1] Low human-occupancy farm buildings are defined in the National Farm Building Code of Canada 1995 as having an occupancy load of 1 person or less per 40 m^2 of floor area. Minor storage buildings include only those storage buildings that represent a low direct or indirect hazard to human life in the event of structural failure, either because people are unlikely to be affected by structural failure, or because structural failure causing damage to materials or equipment does not present a direct threat to human life.

1.2 Live Loads due to Use and Occupancy

Live Loads are the expected variable loads on the building structure due to the intended use and occupancy. Crane loads and the pressure of liquids in containers are considered as Live Loads. The NBCC specifies a minimum magnitude of Live Loads to cover the effect of ordinary load concentrations that may occur on the element being considered.

On roof surfaces, the minimum Live Load of 1 kPa represents the load during construction. Post construction, this load represents, maintenance workers and their equipment. On interior surfaces such as elevated floors, the Live Load is specified based on the occupancy or usage of the area (e.g. assembly areas, storage areas or libraries). The designer of the structure (as defined in CSSBI B8) is responsible for specifying all appropriate loads even if they are included in the NBCC.

Examples of Live Load based on use and occupancy are:

Arenas, Churches, Gymnasia, other areas of similar use	4.8 kPa
Fixed seating Churches and Theaters, Classrooms	2.4 kPa
Equipment areas and service rooms	3.6 kPa

1.2.1 Mezzanine Live Loads

Mezzanine means an intermediate floor assembly between the floor and ceiling of any room or storey and includes an interior balcony. (Ref. NBCC, 1.4.1.2, Division A)

Live Loads on mezzanines are based on the use and occupancy of the area. Where there is a corridor on the mezzanine floor the design load shall be the intended use of the room being served by the corridor. Where a mezzanine is to have multiple uses the design Live Load will be the greater load of the intended uses as specified by the designer of the structure.

1.2.2 Collateral Loads

Dead Load consists of the accumulation of the permanent self weight and collateral loads. Permanent weight is the sum of the self weight of the structural elements and all the weight of other material elements that would always exist throughout the life of the structure (e.g. insulation, columns, beams, floors, roof).

Collateral Load is the weight of any additional loads that may be in specific parts of the building, but may not be in all of the building, or which may be added, removed or relocated during the life of the building (e.g. sprinklers, air handling units and other mechanical units). Listed below are several items or materials that would typically be considered as collateral loads

Sprinklers	0.24 kPa
Light ductwork	0.15 kPa
Acoustic ceiling tiles	0.10 kPa
Light aggregate plaster ceiling	0.19 kPa
Common glass window and framing	0.38 kPa
Glass skylights and framing	0.58 kPa

Frequently, the exact position and dimensions of Collateral Loads are not known at the time of design and it is necessary to consider the effects with and without the Collateral Load in place.

1.2.3 Load Combinations

Load combinations without crane loads are specified in the NBCC 2015, Table 4.1.3.2.-A. Load combinations with crane loads are specified in Table 4.1.3.2.-B.

2 Snow Load Design Criteria

2.1 Minimum Design Snow Load

Manufacturers of Steel Building Systems who are members of the CANADIAN SHEET STEEL BUILDING INSTITUTE use the following criteria to establish minimum design snow loads, unless otherwise required by the governing building regulations or the design authority:

a) for all occupancy classifications and building sizes covered by Part 4 or Part 9 of NBCC 2015, the requirements of Division B, Subsection 4.1.6, "Loads Due to Snow and Rain", are followed;
b) the ground snow loads and rain loads to be used in conjunction with (a) above are the values given in NBCC 2015, Division B, Appendix C; and,
c) the snow load shape factors to be used in conjunction with (a) above are also given in Division B, Subsection 4.1.6.

2.2 Determination of Snow Loads

2.2.1 Specified Snow Loads

Snow loads on roofs vary according to geographic location (climate), site exposure, shape and type of roof, and also from one winter to another. To account for these varying conditions, the specified snow load, S, on a roof or other surface is expressed as the sum of two components as follows:

$$S = I_s [S_s (C_b C_w C_s C_a) + S_r]$$

where,

I_s = importance factor for snow load as provided in Table 2-1 (reproduced from NBCC 2015, Table 4.1.6.2.-A)

S_s = 1-in-50 year ground snow load by geographic location as specified by the authority having jurisdiction, or in the absence of such data, as listed in Appendix C, Division B of NBCC 2015 for selected locations in Canada, (kPa).

C_b = basic roof snow load factor (see 2.2.2)

C_w = wind exposure factor (see 2.2.3)

C_s = slope factor (see 2.2.4)

C_a = shape factor (see 2.2.5)

S_r = 1-in-50 year associated rain load by geographic location as specified by the authority having jurisdiction, or in the absence of such data, as listed in Appendix C, Division B of NBCC 2015 for selected locations in Canada, but not greater than $S_s(C_b C_w C_s C_a)$ (kPa).

Table 2-1: Importance Factor for Snow Load Is
(See Table 1-1 for the Importance Category definitions)

Importance Category	Importance Factor, I_s	
	ULS	SLS
Low	0.8	0.9
Normal	1.0	0.9
High	1.15	0.9
Post-Disaster	1.25	0.9

Note: ULS = Ultimate Limit State, SLS = Serviceability Limit State

2.2.2 Basic Snow Load Factor, C_b

The basic roof snow load factor, C_b, shall be:

a) $C_b = 0.8$ when $l_c \leq \left(\frac{70}{C_w^2}\right)$; and

b) $C_b = \frac{1}{C_w}\left[1 - (1 - 0.8C_w)\exp\left(-\frac{l_c C_w^2 - 70}{100}\right)\right]$ for $l_c > \left(\frac{70}{C_w^2}\right)$

where

l_c	=	characteristic length of the upper or lower roof, defined as $2w - w^2/l$ (metres)
w	=	smaller plan dimension of the roof (metres)
l	=	larger plan dimension of the roof (metres)

2.2.3 Wind Exposure Factor, C_w

The wind exposure factor C_w is taken equal to 1.0 except under certain circumstances. Observations in many areas of Canada have shown that where a roof or a part of it is fully exposed to wind, some of the snow is blown off or prevented from accumulating and the average snow load is reduced.

For buildings in the Low and Normal Importance Categories, with roofs fully exposed to the wind, though not for very large roofs where it may be inappropriate, the wind exposure factor, C_w, may be reduced to 0.75 rather than 1.0 (or 0.5 rather than 1.0 for exposed sites north of the tree line). This substitution applies under the following conditions:

a) the building is located in an open location containing only scattered buildings, trees or other obstructions, open water and shorelines thereof, so that the roof is exposed to the winds on all sides and is expected to remain so during its lifetime; not shielded within a distance from the building equal to 10 times the height of the obstruction above the roof level;

b) the roof does not have any signification obstructions, such as parapet walls, within a distance of at least 10 times the difference between the height of the obstruction, and $C_b C_w S_s/\gamma$ (in metres); (See 2.2.8 for γ)

c) the load case under consideration does not involve accumulation of snow due to drifting from adjacent surfaces (e.g. the other side of a gable roof).

Sample Calculation:
$C_b = 0.8$, $C_w = 0.75$, $S_s = 2.1$ kPa, $\gamma = 3.0$ kN/m^3
Height of obstruction above roof level = 2m
Minimum distance between obstruction and roof area where the $C_w = 0.75$ is applied
$= 10[(2.0) - (0.8)(0.75)(2.1)/3.0)] = 15.8$ m

2.2.4 Roof Slope Factor, C_s

Under most conditions, less snow accumulates on steep than on flat and moderately sloped roofs, because of sliding, better drainage, and saltation. The roof slope factor, C_s, accounts for these effects by reducing the snow load linearly from full snow load at a 30° slope to zero at a 70° slope. To be able to use the full slope reduction, the snow should be able to slide completely off the roof surface under consideration.

$C_s = 1.0$ for $\alpha \leq 30°$
$C_s = (70° - \alpha)/40°$ for $30° < \alpha \leq 70°$
$C_s = 0$ for $\alpha > 70°$

A lesser value of C_s is permitted for unobstructed, smooth, slippery roofs such as metal or glass where snow and ice can slide completely off the roof. In this case, the load may be reduced linearly from full load at 15° to zero at 60°.

$C_s = 1.0$ for $\alpha \leq 15°$
$C_s = (60° - \alpha)/45°$ for $15° < \alpha \leq 60°$
$C_s = 0$ for $\alpha > 60°$

The slope factor shall be 1.0 when used in conjunction with shape factors for increased snow load in valleys and from accumulations of snow sliding off an upper roof.

2.2.5 Roof Shape Factor, C_a

Due to the effects of wind encountering obstructions, uneven roof surfaces, and snow sliding off one surface onto another, there are many areas of a roof that can accumulate significantly higher snow loads. Figures 2-1 through 2-7 illustrate the basic accumulation of snow on various roof types, while Figure 2-8 through 2-11 depict the localized accumulations of snow in roof valleys, adjacent to projections, and resulting from snow sliding. There are additional conditions that can lead to snow load accumulations not covered in this bulletin. NBCC 2015 should be reviewed to ensure all snow drift possibilities have been addressed.

2.2.6 Full and Partial Loading

Article 4.1.6.3 of the NBCC 2015 stipulates that in addition to the distribution of uniform snow loads, the building shall be designed for a 50% partial load on part of the area in such a way as to produce the greatest effect on the member considered. This requirement is reflected in load Case 2 in Figures 2-1 through 2-7.

2.2.7 Snow Drift at Corners of Upper Roofs

Article 4.1.6.8 of NBCC 2015 describes the method for determining the drift loads on the lower roof against the two faces of an outside or an inside corner of an upper level rood or obstruction. The basic approach is to extend the drift accumulations radially around an outside corner and for an inside corner to extend the drift loads as far as the bisector of the interior corner angle. These conditions are illustrated in Figures 4.1.6.8.-A and –B of NBCC 2015.

2.2.8 Unit Weight of Snow

In the calculation of loads due to snow on roofs, a measurement or good estimate of the unit weight of the snow is necessary. The unit weight of snow on roofs, γ, obtained from measurements at a number of stations across Canada varied from about 1.0 to 4.5 kN/m³. A value for use in design in lieu of better local data is $\gamma = 4.0$ kN/m³ or $[0.43S_s + 2.2]$ kN/m³ whichever is less.

Notes to the Figures:

The NBCC 2015 requires, as did previous editions, that the snow load distributions (Figures 2-1 through 2-7) be considered plus the effects of any special conditions of snow load accumulations (Figures 2-8 through 2-11) resulting from shielding or sliding snow. The likelihood that non-uniformity of snow load will be the prevailing mode increases as the tributary roof area under consideration is increased. Such non-uniformity may create an imbalance effect that is more critical to the supporting structure than a heavier mass of uniform snow.

A minimum of two snow load distributions are considered in the design of structural members supporting larger roof areas (e.g. rigid frames, continuous beams, continuous purlins). For roof cladding, a uniform snow load is generally assumed for design purposes. Additional snow load accumulations are superimposed on the appropriate snow load distributions, where applicable. No special provision is made for the effects of full or partial snow removal, since removal is not necessary where design loads and safety margins are adequate, and may, in fact, cause damage to the roof surface.

2.3 Illustrative Example #1

2.3.1 Introduction

The building under consideration is illustrated in Figure 2-12. There is a main building that has a small mechanical room in the centre of the roof, as well as a canopy over the front entrance. In addition to the main building, there is an adjacent building that has a lower roof elevation. The building location is Kitchener, ON where there is a ground snow load of S_s = 2.0 kPa and a rain load of S_r = 0.4 kPa. For this type of building the Importance Category is "Normal" and so the Importance Factor for Snow is I_s = 1.0. A snow density of $\gamma = [0.43S_s + 2.2] = [(0.43)(2.0)+2.2] = 3.06$ kN/m^3 (which is less than 4.0 kN/m^3) is calculated for this location.

2.3.2 Main Roof

The main roof (ignoring the area around the mechanical room which is addressed in Section 2.3.4) may have an accumulation around the parapet that needs to be checked. Since this is the highest roof in the area, the wind exposure factor is C_w = 0.75. The slope factor C_s = 1.0 since this is a flat roof.

Step 1: Determine the basic roof snow load factor, C_b

The upper level roof dimensions are: l = 60 m, w = 40 m

$l_c = 2w - w^2/l = (2)(40) - (40)^2/(60) = 53.3$

$(70/C_w^2) = (70/(0.75)^2) = 124$

Since $l_c = 53.3 < 124$, with $C_w = 0.75$, there is no increase in the basic roof snow load factor:

$\therefore C_b = 0.8$

Step 2: Determine whether drifting occurs at the parapet

$h_p = 0.50$ m

$0.8S_s/\gamma = (0.8)(2.0)/(3.06) = 0.52 \text{ m} > h_p$,

Since the depth of the snow over the roof area (ignoring any reductions do to wind) is greater than the parapet height, drifting is not a concern at the parapet.

$\therefore C_a = 1.0$

Step 3: Determine the specified snow load, S

$S = I_s [S_s C_b C_w C_s C_a + S_r] = (1.0)[(2.0)(0.8)(0.75)(1.0)(1.0) + (0.4)]$

$S = 1.6$ kPa

Note that the unbalanced loads illustrated in Figures 2-5 or 2-6 may also apply.

2.3.3 Canopy Loading (use Figure 2-9)

$C_b = 0.8$, $C_w = 1.0$, $C_s = 1.0$, l_{cs} (upper roof) = 53.3, $\beta = 1.0$

$$h_p' = h - \left(\frac{C_b C_w S_s}{\gamma}\right) = 0.5 - \frac{(0.8)(1.0)(2.0)}{3.06} = 0$$

Step 1: Determine F

$F = 0.35\beta[\gamma l_{cs}/S_s - 5(\gamma h_p'/S_s)]^{0.5} + C_b$

$= (0.35)(1)[(3.06)(53.3)/(2.0)]^{0.5} + 0.8 = 3.96 \leq 5$,

$\therefore F = 3.96$

Step 2: Determine the maximum accumulation factor C_{a0}

C_{a0} is the minimum of the following:

$C_{a0} = F/C_b = 3.96/0.8 = 4.95$, or

$C_{a0} = \beta\gamma h/C_b S_s = (1.0)(3.06)(5.0)/(0.8)(2.0) = 9.56$,

$\therefore C_{a0} = 4.95$

Step 3: Determine the maximum snow load S_{max}

$S_{max} = I_s [S_s C_b C_w C_s C_{a0} + S_r] = (1.0)[(2.0)(0.8)(1.0)(1.0)(4.95) + (0.4)]$

$S_{max} = 8.32$ kPa

Step 4: Determine the length of the snowdrift, x_d

$x_d = 5(C_b S_s/\gamma)(C_{a0} -1) = (5)(0.8)(2.0)/(3.06)(4.95-1)$

$x_d = 10.3$ m

Step 5: Determine the snow load at the canopy edge, S_{edge}

$C_a = C_{a0} - (C_{a0} - 1)(x / x_d)$

where,

x = canopy width = 2.5 m

$C_a = 4.95 – (4.95 -1)(2.5/10.3) = 3.99$

$S_{edge} = I_s [S_s C_b C_w C_s C_a + S_r] = (1.0)[(2.0)(0.8)(1.0)(1.0)(3.99) + (0.4)]$

$S_{edge} = 6.78$ kPa

2.3.4 Roof Area Adjacent to Mechanical Room

The mechanical room will create snow accumulations around it that need to be considered. The height h = 2 m and the width l_o = 3 m.

Step 1: Determine the maximum accumulation factor C_{a0}

Minimum of,

$C_{a0} = 0.67\gamma h/C_b S_s = (0.67)(3.06)(2.0)/(0.8)(2.0) = 2.56$, or

$C_{a0} = \gamma l_o /7.5 C_b S_s +1 = (3.06)(3.0)/(7.5)(0.8)(2.0) + 1 = 1.77$

$\therefore C_{a0} = 1.77$

Step 2: Determine the maximum snow load S_{max}

$S_{max} = I_s [S_s C_b C_w C_s C_{a0} + S_r] = (1.0)[(2.0)(0.8)(1.0)(1.0)(1.77) + (0.4)]$

$S_{max} = 3.23$ kPa

Step 3: Determine the length of the snowdrift, x_d

Minimum of,

$x_d = 3.35h = 3.35(2) = 6.7$ m, or

$x_d = (2/3)\, l_o = (2/3)(3) = 2.0$ m

$x_d = 2.0$ m

Step 4: Determine the length of the affected zone

$h' = h - C_b C_w S_s/\gamma = 2 – (0.8)(1.0)(2.0)/(3.06) = 1.48$

$10h' = 14.8$ m

At 14.8 m away from the mechanical room, C_w can be reduced to 0.75.

Step 5: Determine the specified snow load, S

Within a distance of 14.8 m from the mechanical room:

$S = I_s [S_s C_b C_w C_s C_a + S_r] = (1.0)[(2.0)(0.8)(1.0)(1.0)(1.0) + (0.4)]$

S = 2.0 kPa

Beyond 14.8 m from the mechanical room:

$S = I_s [S_s C_b C_w C_s C_a + S_r] = (1.0)[(2.0)(0.8)(0.75)(1.0)(1.0) + (0.4)]$

S = 1.6 kPa

2.3.5 Lower Roof

The adjacent roof is within 5 m of the higher roof and 3.5 m lower, therefore, the influence of additional snow accumulation must be considered. This is a gable roof, but since the roof slope is only 5°, there is no sliding and C_s = 1.0. In addition, the provisions of unbalanced loading must be considered as described in Figure A2.

C_w = 0.75 (where allowed), C_s = 1.0, l_{cs} (upper roof) = 53.3 (from section 2.3.2)

β = 1.0

$$h_p' = h - \left(\frac{C_b C_w S_s}{\gamma}\right) = 0.5 - \frac{(0.8)(1.0)(2.0)}{3.06} = 0$$

Step 1: Determine the basic roof snow load factor, C_b

The lower roof dimensions are: l = 36 m, w = 22 m

$l_c = 2w - w^2/l = (2)(22) - (22)^2/(36) = 30.6$

Since l_c = 30.6 < 124, with C_w = 0.75, there is no increase in the basic roof snow load factor:

$\therefore$ **C_b = 0.8**

Step 2: Determine F

$F = 0.35\beta[\gamma l_{cs}/S_s - 5(\gamma h_p'/S_s)]^{0.5} + C_b$

$= (0.35)(1)[(3.06)(53.3)/(2.0)]^{0.5} + 0.8 = 3.96 \leq 5,$

$\therefore$ **F = 3.96**

Step 3: Determine the maximum shape factor C_{a0}

C_{a0} is the minimum of the following:

$C_{a0} = F/C_b = 3.96/0.8 = 4.95$, or

$C_{a0} = \beta\gamma h/C_b S_s = (1.0)(3.06)(3.5)/(0.8)(2.0) = 6.69$

$\therefore$ **C_{a0} = 4.95**

Step 4: Determine the maximum snow load S

$S_{max} = I_s\,[S_s\,C_b\,C_w\,C_s\,C_{a0} + S_r] = (1.0)[(2.0)(0.8)(1.0)(1.0)(4.95) + (0.4)]$

S_{max} = 8.32 kPa

Step 5: Determine the length of the snowdrift, x_d

$x_d = 5(C_b S_s/\gamma)(C_{a0} - 1) = (5)(0.8)(2.0)/(3.06)(4.95-1)$

x_d = 10.3 m

Step 6: Determine the snow load at the roof eave, S_{eave}

$C_a = C_{a0} - (C_{a0} - 1)(x / x_d)$

where,

x = gap = 3 m

$C_a = 4.95 - (4.95 - 1)(3/10.3) = 3.80$

$S_{eave} = I_s\,[S_s\,C_b\,C_w\,C_s\,C_a + S_r] = (1.0)[(2.0)(0.8)(1.0)(1.0)(3.80) + (0.4)]$

S_{eave} = 6.48 kPa

Step 7: Determine the length of the affected zone

$h' = h - C_b C_w S_s/\gamma = 3.5 - (0.8)(1.0)(2.0)/(3.06) = 2.98$

10h′ = 29.8 m

Since the building is only 22 m wide, there will be no reduction in the snow load due to the wind exposure factor (C_w = 1.0).

Step 8: Determine the specified snow load, S

$S = I_s [S_s C_b C_w C_s C_a + S_r] = (1.0)[(2.0)(0.8)(1.0)(1.0)(1.0) + (0.4)]$

S = 2.0 kPa

2.3.6 Summary of Specified Roof Snow Loads

Figure 2-13 summarizes the roof snow load distributions for Illustrative Example #1.

2.4 Illustrative Example #2

2.4.1 Introduction

Consider an SBS in Chilliwack, BC where there is a ground snow load of S_s = 2.2 kPa and a rain load of S_r = 0.3 kPa. Importance Category is "Normal" and so the Importance Factor for Snow is I_s = 1.0. A snow density of $\gamma = [0.43S_s + 2.2] = [(0.43)(2.2)+2.2] = 3.15$ kN/m^3 (which is less than 4.0 kN/m^3) is calculated for this location. The roof is metal and has sloping multi-level areas as illustrated in Figure 2-14.

2.4.2 Upper Roof

Step 1: Determine the basic roof snow load factor, C_b

The upper level roof dimensions are: l = 30 m, w = 32 m

$C_w = 0.75$

$l_c = 2w - w^2/l = (2)(30) - (30)^2/(32) = 31.9$

Since $l_c = 31.9 < 124$, with $C_w = 0.75$, there is no increase in the basic roof snow load factor.

$\therefore$ **C_b = 0.8**

Step 2: Determine the sliding factor, C_s

Since the upper roof is metal, and sloping more than 15°, a reduction in the snow load is allowed.

$C_s = (60 - \alpha)/45 = (60 - 20)/45$

C_s = 0.89

Step 3: Design Case 1, Figure 2-2

$S = I_s [S_s C_b C_w C_s C_a + S_r] = (1.0)[(2.2)(0.8)(0.75)(0.89)(1.0) + (0.3)]$

S = 1.47 kPa

Step 4: Design Case 3, Figure 2-2

$C_a(\alpha = 20°) = 1.25$

$C_w = 1.0$

$S = I_s [S_s C_b C_w C_s C_a + S_r] = (1.0)[(2.2)(0.8)(1.0)(0.89)(1.25) + (0.3)]$

S = 2.26 kPa

2.4.3 Lower Roof

$C_b = 0.8$; $C_w = 1.0$; $C_s = 1.0$ since the roof slope is less than 15°

l_{cs} (upper roof) = 31.9 (from section A5.2); $h_p' = 0$

Step 1: Determine F

$F = 0.35\beta[\gamma l_{cs}/S_s - 5(\gamma h_p'/S_s)]^{0.5} + C_b = (0.35)(1)[(3.15)(31.9)/(2.2)]^{0.5} + 0.8 = 3.17 \leq 5$

$\therefore$ **F = 3.17**

Step 2: Determine the maximum shape factor, C_{a0}

C_{a0} is the minimum of the following:

$C_{a0} = F/C_b = 3.17/0.8 = 3.96$, or

$C_{a0} = \beta\gamma h/C_b S_s = (1.0)(3.15)(4.0)/(0.8)(2.2) = 7.16$

$\therefore$ **$C_{a0} = 3.96$**

Step 3: Determine the maximum snow load, S_{max}

$S_{max} = I_s\,[S_s\,C_b\,C_w\,C_s\,C_{a0} + S_r] = (1.0)[(2.2)(0.8)(1.0)(1.0)(3.96) + (0.3)]$

$S_{max} = 7.27$ kPa

Step 4: Determine the length of the snowdrift, x_d

$x_d = 5(C_b S_s/\gamma)(C_{a0} - 1) = (5)(0.8)(2.2)/(3.15)(3.96-1)$

$x_d = 8.27$ m

Step 5: Determine the length of the affected zone

$h' = h - C_b C_w S_s/\gamma = 4 - (0.8)(1.0)(2.2)/(3.15) = 3.44$ m

$10h' = 34.4$ m

Since the lower roof is only 16 m wide, there will be no reduction in the snow load due to the wind exposure factor ($C_w = 1.0$).

Step 6: Determine the specified snow load, S

$S = I_s\,[S_s\,C_b\,C_w\,C_s\,C_a + S_r] = (1.0)[(2.2)(0.8)(1.0)(1.0)(1.0) + (0.3)]$

S = 2.06 kPa

Step 7: Sliding snow accumulation

Since the upper roof slopes towards the lower roof at an angle greater than 15°, the possibility of snow accumulation on the lower roof due to sliding must be considered.

S(upper roof) = 1.47 kPa

Snow sliding onto lower roof = ½(1.47 kPa)(16 m) = 11.8 kN/m

The snow accumulates on the lower roof in a triangular shape over a width equal to x_d.

$S_{max} = 7.27 + 2(11.8)/(8.27)$

$S_{max} = 10.1$ kPa

2.4.4 Summary of Roof Snow Loads

Figure 2-14 summarizes the roof snow load distributions for Illustrative Example #2.

2.5 Illustrative Example #3

2.5.1 Introduction

Consider a SBS in Moncton, NB where there is a ground snow load of S_s = 3.0 kPa and a rain load of S_r = 0.6 kPa. The building length is 50 m and has a saw-tooth configuration as illustrated in Figure 2-15. For this type of building the Importance Category is "Normal" and so the Importance Factor for Snow is I_s = 1.0.

2.5.2 Load Case I (use Figure 2-8)

C_w = 0.75
C_s = 1.0 since the roof slope is not greater than 15°

Step 1: Determine the basic roof snow load factor, C_b

The upper lever roof dimensions are: l = 50 m, w = 40 m
$l_c = 2w - w^2/l = (2)(40) - (40)^2/(50) = 48$
Since $l_c = 48 < 124$, with C_w = 0.75, there is no increase in the basic roof snow load factor.
$\therefore C_b = 0.8$

$S = I_s [S_s C_b C_w C_s C_a + S_r] = (1.0)[(3.0)(0.8)(0.75)(1.0)(1.0) + (0.6)]$
S = 2.40 kPa

2.5.3 Load Case 2 (use Figure 2-8)

C_w = 1.0
For $0 < x \leq 20/4 = 5$ m, $C_a = 1/C_b = 1/0.8 = 1.25$
$S = I_s [S_s C_b C_w C_s C_a + S_r] = (1.0)[(3.0)(0.8)(1.0)(1.0)(1.25) + (0.6)]$
S = 3.60 kPa

For $5 < x \leq 20/2 = 10$ m, $C_a = 0.5/C_b = 0.5/0.8 = 0.625$
$S = I_s [S_s C_b C_w C_s C_a + S_r] = (1.0)[(3.0)(0.8)(1.0)(1.0)(0.625) + (0.6)]$
S = 2.10 kPa

2.5.4 Load Case 3 (use Figure 2-8)

C_w = 1.0
For $0 < x \leq 20/8 = 2.5$ m, $C_a = 1.5/C_b = 1.5/0.8 = 1.875$
$S = I_s [S_s C_b C_w C_s C_a + S_r] = (1.0)[(3.0)(0.8)(1.0)(1.0)(1.875) + (0.6)]$
S = 5.10 kPa

For $2.5 < x \leq 20/2 = 10$ m, $C_a = 0.5/C_b = 0.5/0.8 = 0.625$
$S = I_s [S_s C_b C_w C_s C_a + S_r] = (1.0)[(3.0)(0.8)(1.0)(1.0)(0.625) + (0.6)]$
S = 2.10 kPa

2.5.5 Other Load Cases

Multispan structures must also be designed for the load patterns described in Figures 2-2 and 2-7. For the load cases shown in Figure 2-15, those portions of the span may be taken as uniformly loaded.

Figure 2-1: Shape Factor, C_a, for Single Slope Roofs

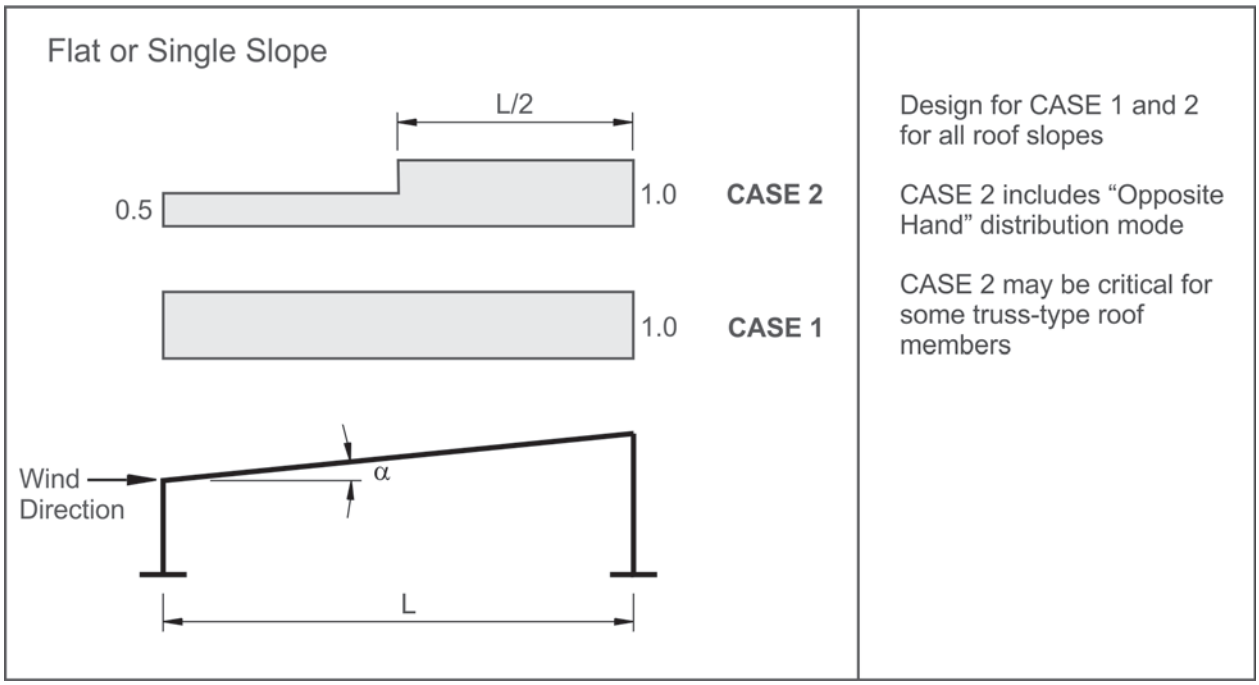

Figure 2-2: Shape Factor, C_a, for Single Gable Roofs

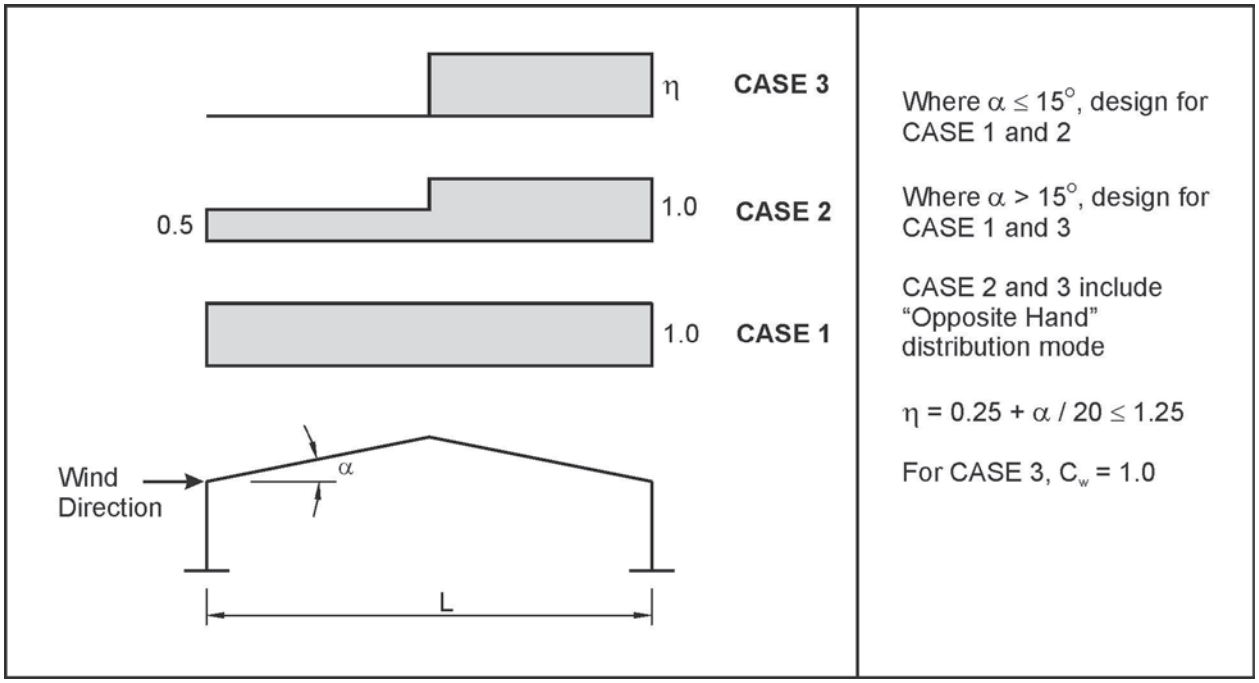

Figure 2-3: Shape Factor, C_a, for Simple Arch Slippery Roofs, $\alpha_e \leq 30°$

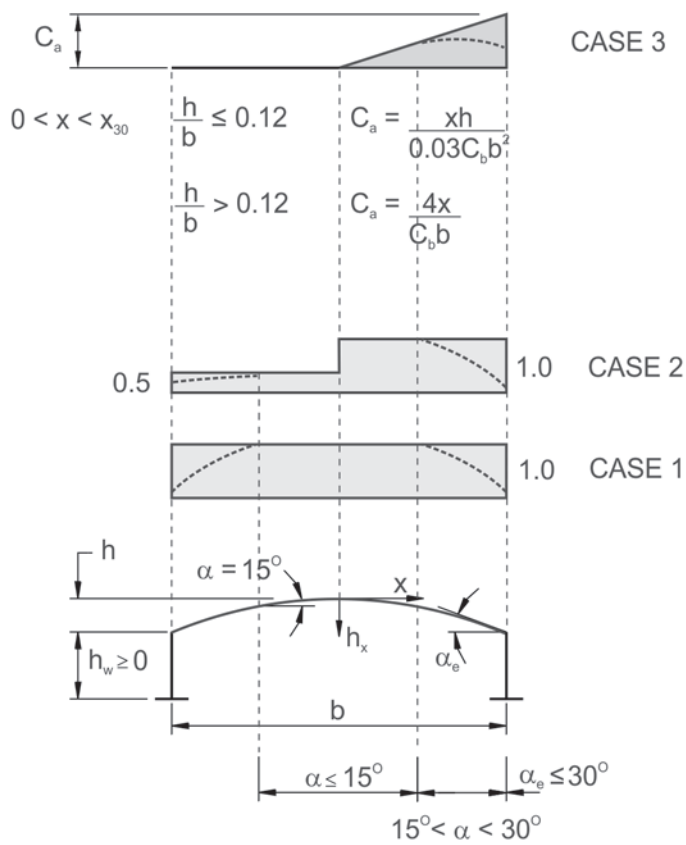

Design for all CASES

.

C_w = 1.0, 0.75 or 0.5, and $C_s = f(\alpha)$

CASES 2 and 3 include "Opposite Hand" distribution mode

These distributions are for unobstructed slippery roofs.

The dashed lines in the distributions show the effects of C_s. These distributions can be used if a more detailed analysis is required

Figure 2-4: Shape Factor, C_a, for Simple Arch Slippery Roofs, $\alpha_e > 30°$

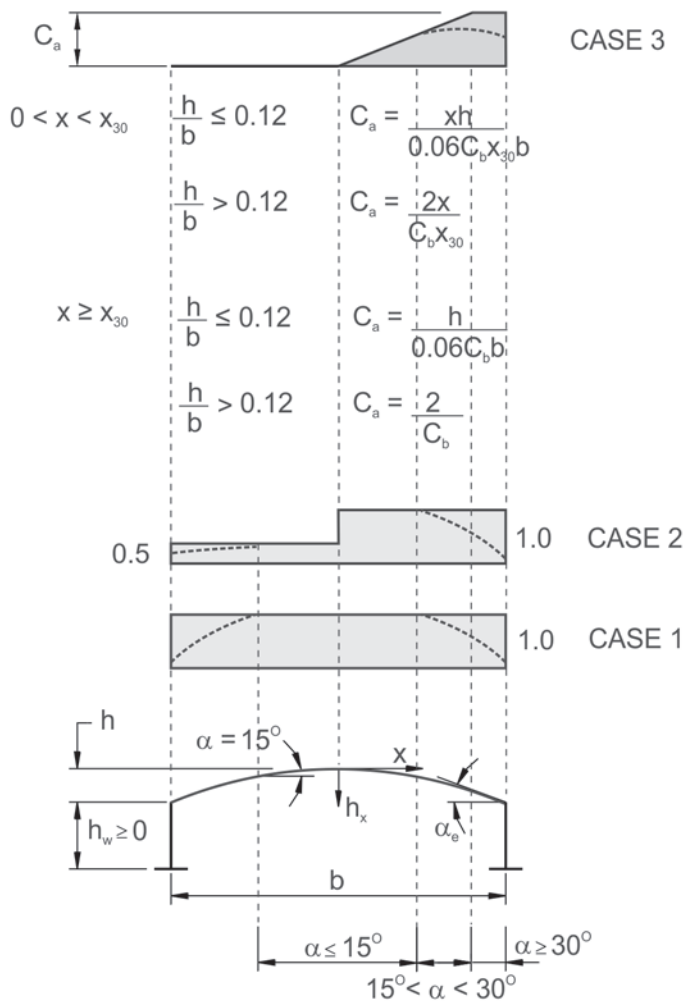

Design for all CASES

.

C_w = 1.0, 0.75 or 0.5, and $C_s = f(\alpha)$

CASES 2 and 3 include "Opposite Hand" distribution mode

These distributions are for unobstructed slippery roofs.

The dashed lines in the distributions show the effects of C_s. These distributions can be used if a more detailed analysis is required

Figure 2-5: Shape Factor, C_a, for Continuous Beams

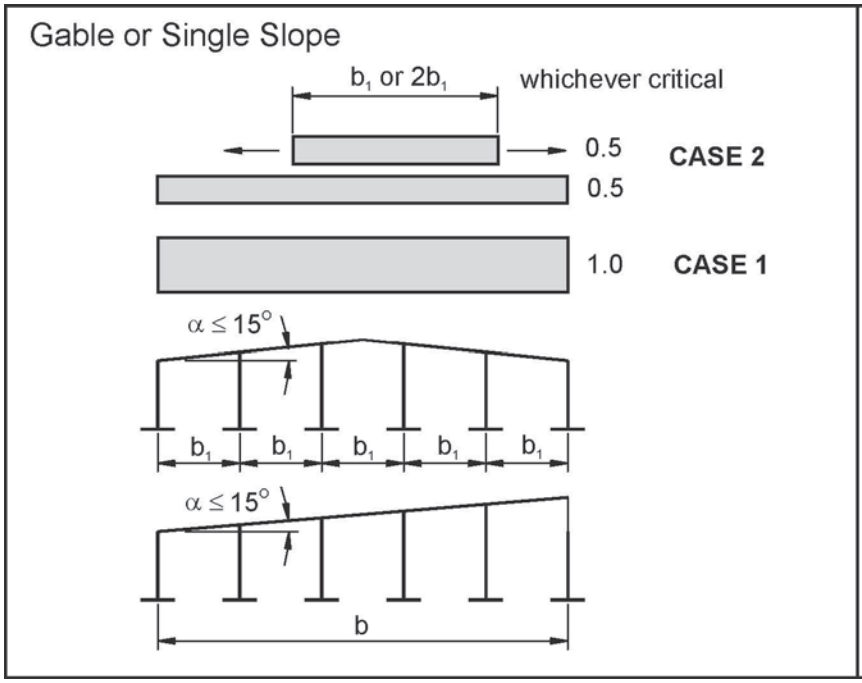

Design for CASE 1 and 2

Unbalanced load CASE 2 starts and ends at a column

Figure 2-6: Shape Factor, C_a, for Continuous Purlins

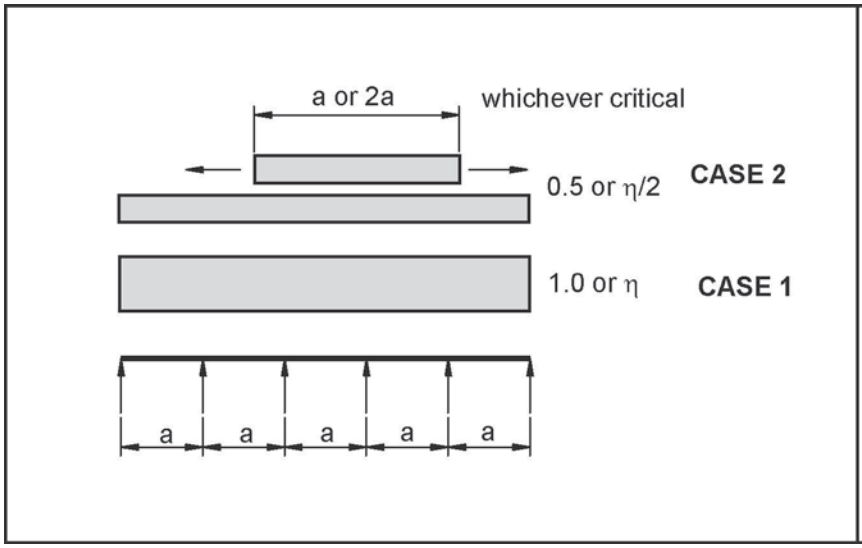

Design for CASE 1 and 2

For gable roof slopes ≤ 15° and arch roofs with h/b ≤ 0.05 use 1.0

For gable roof slopes > 15° use η as noted in Fig.A1(B)

For arch roofs with h/b > 0.05 see Fig.A1(C)

Unbalanced load CASE 2 starts and ends at a support

Figure 2-7: Shape Factor, C_a, for Multiple Spans

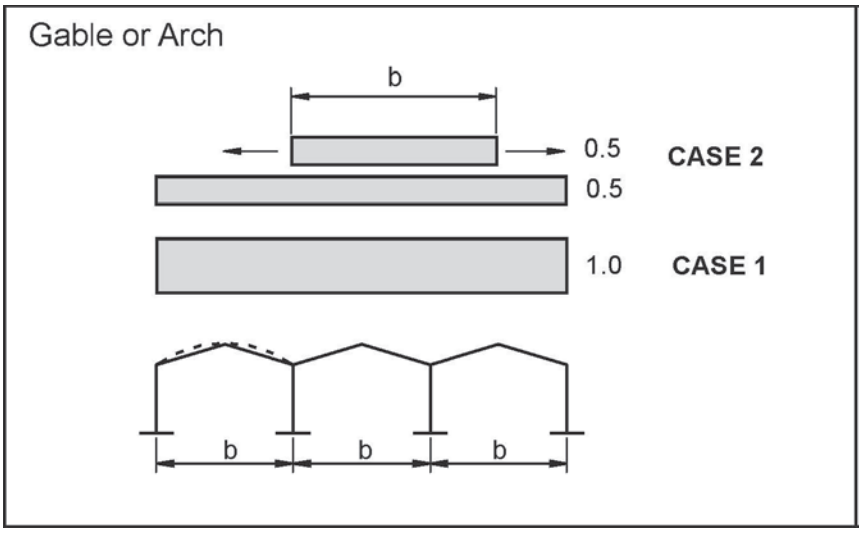

Design for CASE 1 and 2

Also design each span for loading as per Fig.A1(A), (B) or (C)

Also design for snow accumulation in valleys as per Fig.A5

Unbalanced load CASE 2 starts and ends at a column

Figure 2-8: Shape Factor, C_a, for Valleys

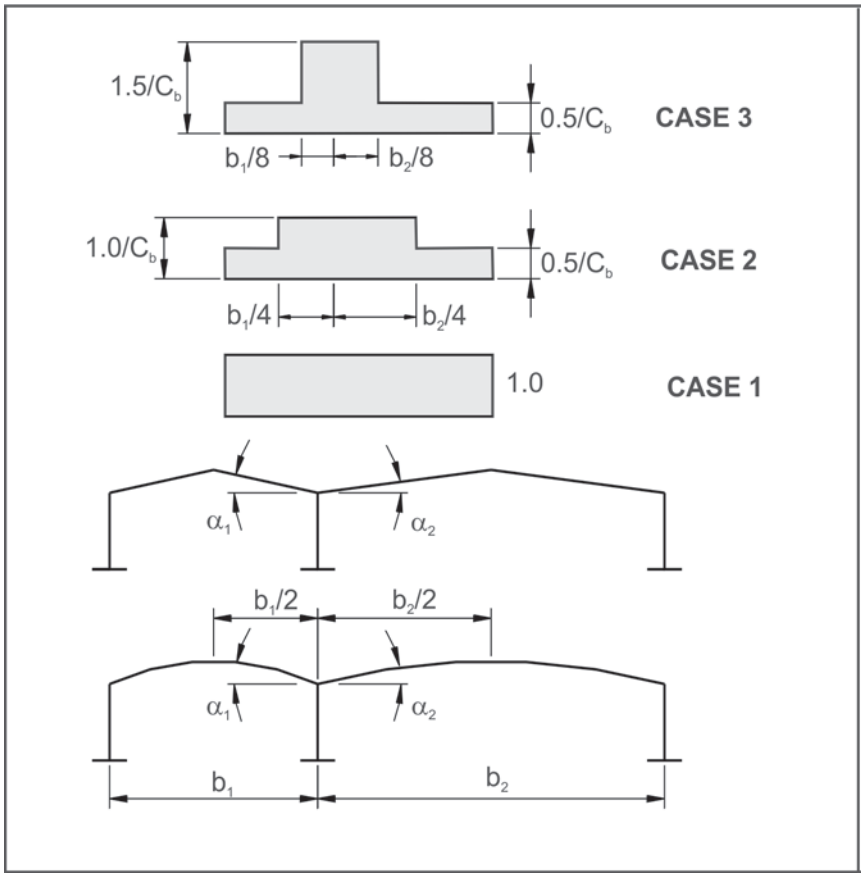

Where both α_1 and $\alpha_2 \leq 10^o$, design for CASE 1 only. C_w = 1.0. 0.75 or 0.5

Where α_1 and/or $\alpha_2 > 10^o$, design for CASE 1, 2 and 3

For CASE 2 and 3, C_w = 1.0 and C_s = 1.0

NOTE:
Portions of spans where loading is not indicated may be taken as uniformly loaded when determining the effects of snow accumulations in roof valleys.

Figure 2-9: Shape Factor, C_a, for Lower of Multi-Level Roofs

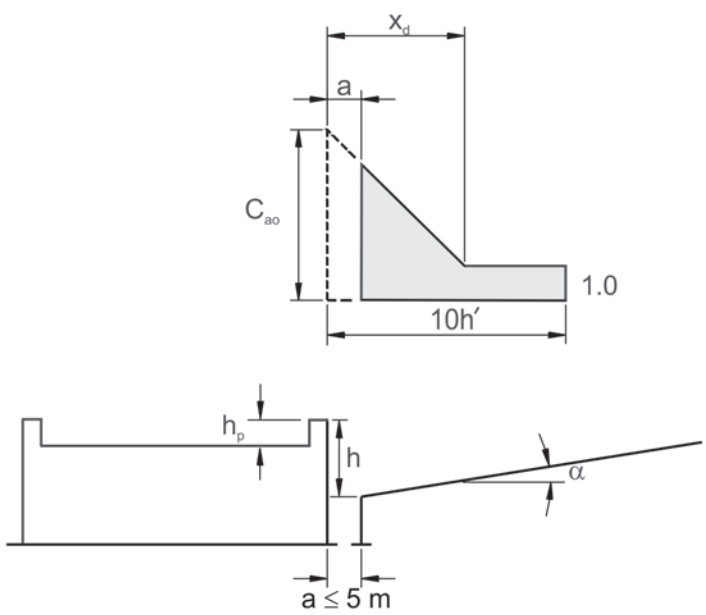

C_{ao} is the lesser of:

$C_{ao} = \beta(\gamma h)/(C_b S_s)$ or

$C_{ao} = F/C_b$

where:

$\beta = 1$

$F = 0.35\beta(\gamma l_{cs}/S_s - 5(\gamma h'_p/S_s))^{0.5} + C_b$

$F \leq 5$

l_{cs} characteristic length of upper roof

$h'_p = h_p - 0.8S_s/\gamma \leq (l_{cs}/5)$

$h' = h - C_b C_w S_s/\gamma$

$x_d = 5(C_b S_s/\gamma)(C_{a0}-1)$

$C_w = 1.0$ for $x_d \leq 10h'$

$C_s = f(\alpha)$

NOTE:
Reduced loads from sliding snow should be considered if $\alpha > 15°$. See Fig.A8

Figure 2-10: Shape Factor, C_a, Adjacent to Obstructions

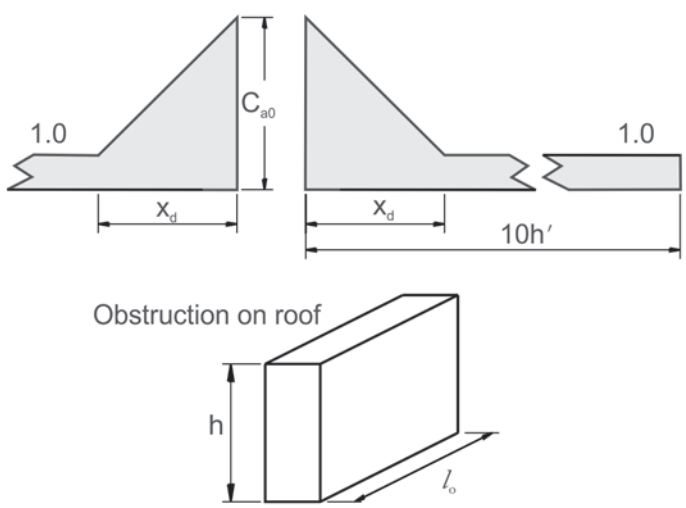

For $l_o \leq 3$m, $C_a = 1.0$

For $l_o > 3$m, C_{a0} is the lesser of:

$C_{a0} = 0.67\gamma h/C_b S_s$, or

$C_{a0} = \gamma l_o/7.5C_b S_s + 1$

x_d is the lesser of 3.35h or $(2/3)l_o$

$C_w = 1.0$ for $x_d \leq 10h'$

$h' = h - C_b C_w S_s/\gamma$

l

Figure 2-11: Shape Factor, C_a, For Sliding Snow

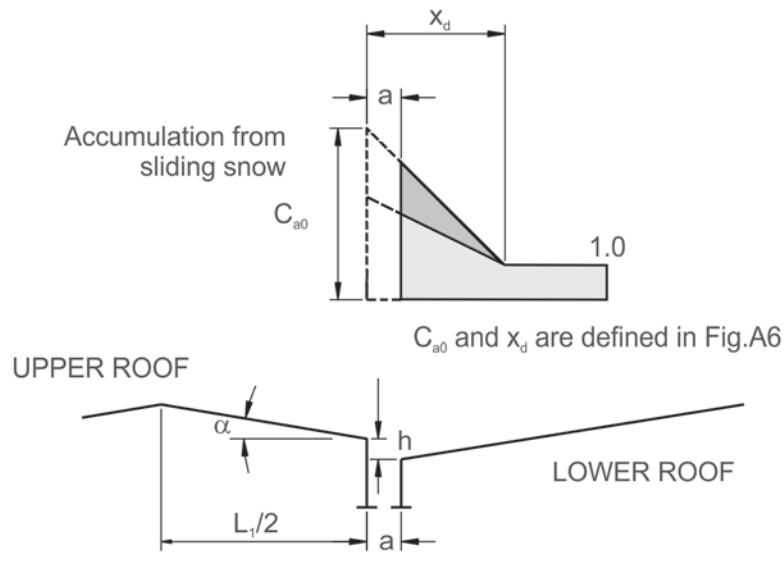

In the calculation of C_b and C_{a0}, l_c and w are taken as the plan dimensions of the lower and upper roofs respectively.

Design lower roof for loading according to Fig.A6, plus 50% of the snow on the portion of the upper roof that slopes towards the lower roof (i.e. $0.5SL_1/2$ per unit of building length)

Distribute additional snow as indicated

$C_w = 1.0$

NOTE:
Under certain conditions snow may slide at very low slopes. Check where critical. Where snow build-up inhibits sliding, a reduced percentage may be taken.

Figure 2-12: Example #1 Building Geometry

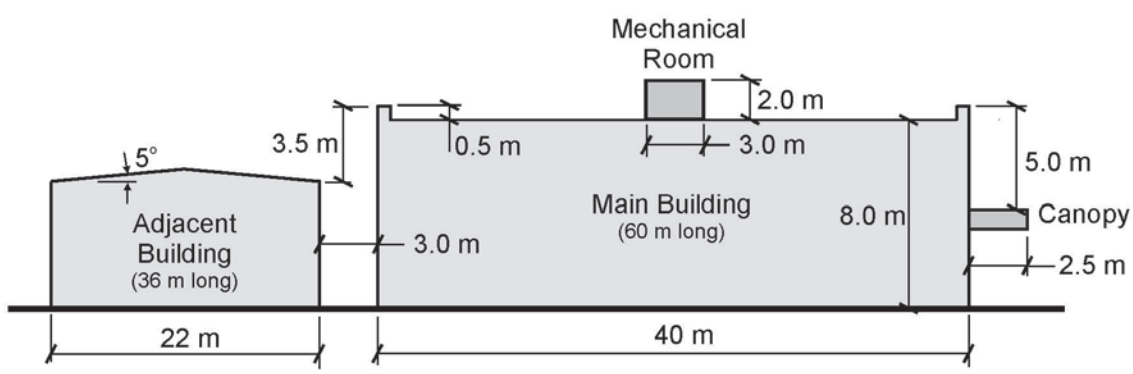

Figure 2-13: Snow Load Distribution for Example #1

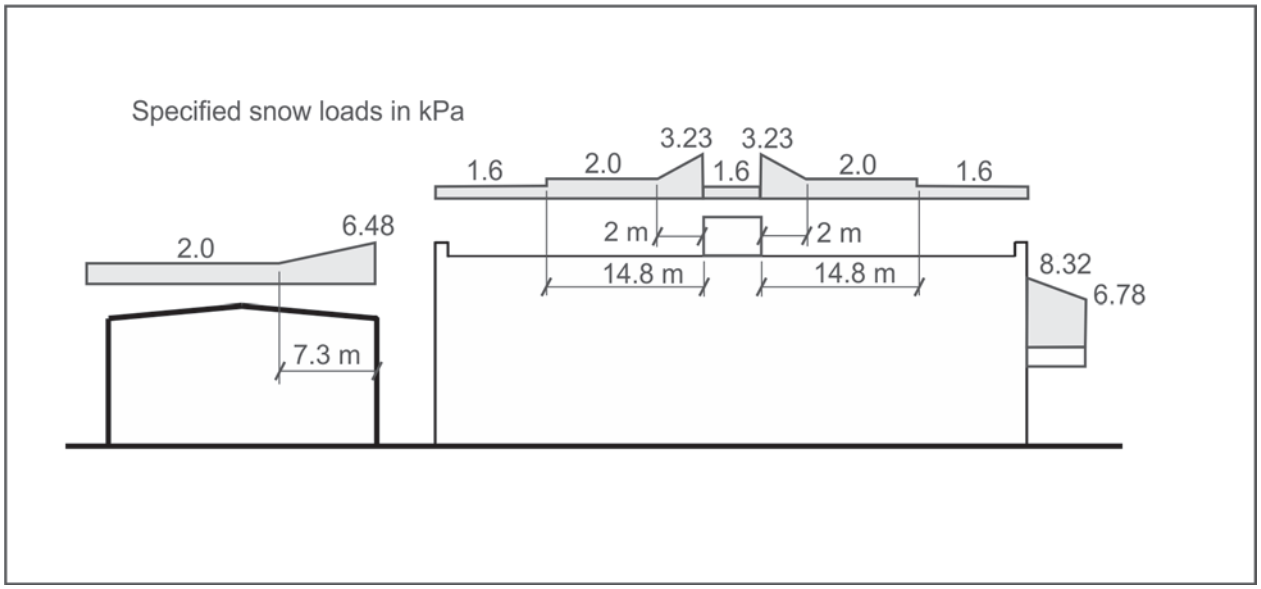

Figure 2-14: Snow Load Distribution for Example #2

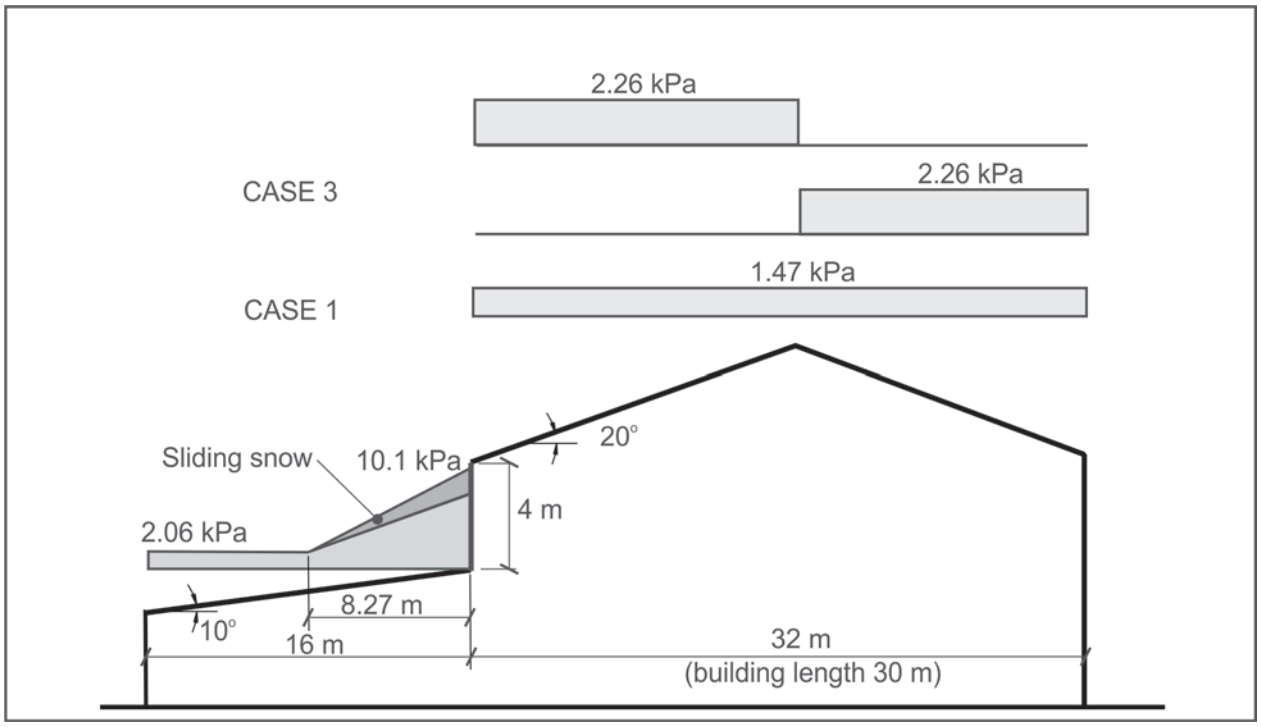

Figure 2-15: Snow Load Distribution for Example #3

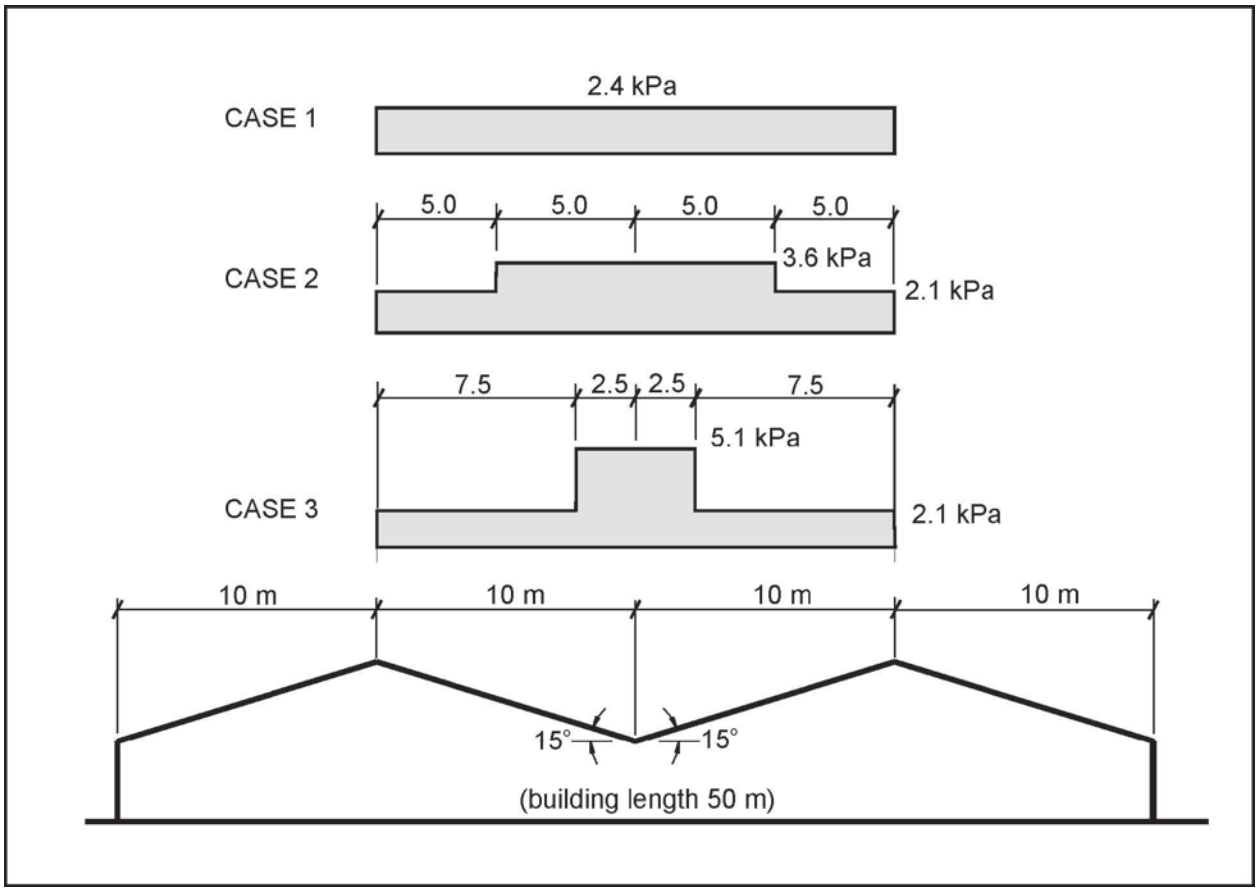

3 Wind Load Design Criteria

3.1 Application

The design criteria provided in this section are directly applicable to low rise buildings having height-to-width ratios (H/D) not greater than 0.5, for which the reference height does not exceed 20m and with gabled or single ridged roofs. In the absence of more case-specific data, the same criteria may also be used for building where H/D is not more than 1.0 and where the reference height does not exceed 20m. Beyond these latter limits, reference should be made to Division B, Part 4 of the NBCC 2015.

3.2 Minimum Design Wind Loads

Manufacturers of Steel Building Systems who are members of the CANADIAN SHEET STEEL BUILDING INSTITUTE use the following criteria to establish minimum design wind loads, unless otherwise required by the governing building regulations or the design authority:

a) For all occupancy classifications and building sizes covered by Part 4 or Part 9 of the NBCC 2015, the requirements of Subsection 4.1.7, "Wind Load", are followed.

b) The reference velocity pressures to be used in conjunction with (a) above are given in the NBCC 2015 Appendix C of Division B.

c) The designated "*Static Procedure*" as applicable to low and medium height buildings is used to select the "*exposure*" and "*gust effect*" factors.

3.3 Determination of Wind Pressures

3.3.1 General

The magnitude of the wind pressures exerted on a building depends primarily on the speed of the wind, the air density, and the interaction between the airflow and the building. Figure 3-1 illustrates a representative building shape and the airflow lines around it. Pressures are exerted on all surfaces both internally and externally. These pressures are non-uniform, fluctuate widely, and can be much higher than average in certain localized areas. For buildings with flat and low-sloped roofs, the windward wall is the only surface subject to a positive external pressure; all other surfaces experience a negative external pressure. Internal pressure as a result of wind may be either positive or negative, depending on the location and size of openings penetrating the building enclosure.

Figure 3-1: Air Flow Lines and Resulting External Pressures

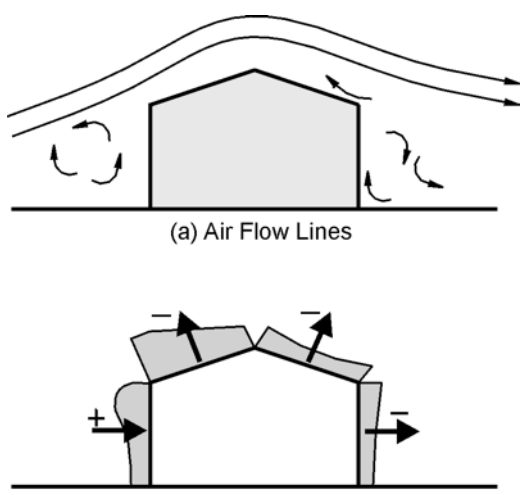

Denoting the external pressure as "p" and the internal pressure as "p_i", then the net wind pressure on the enclosure of a building is the algebraic difference between the two, i.e. ($p_n = p - p_i$) since p and p_i are considered to act concurrently. Figure 3-2 illustrates the four cases of external and internal pressures acting.

Figure 3-2: Net Pressures

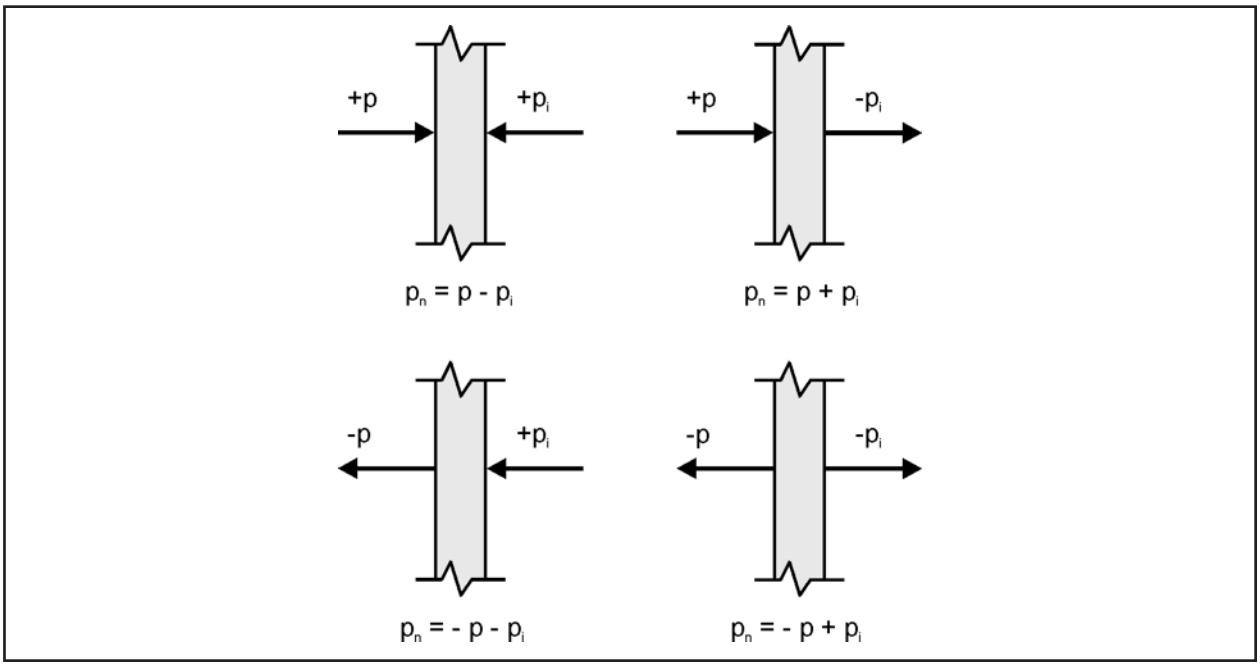

The net, or resultant, pressure is taken with respect to the external surface. The sign convention used throughout is to consider a pressure as positive when it is directed towards a surface and negative when it is directed away from a surface.

The specified external pressure, p, is calculated from the expression:

$$p = I_w \cdot q \cdot C_e \cdot C_t \cdot C_g \cdot C_p$$

The specified internal pressure, p_i is calculated from the expression:

$$p_i = I_w \cdot q \cdot C_{ei} \cdot C_t \cdot C_{gi} \cdot C_{pi}$$

Where

p	=	specified external pressure acting statically and in a direction normal to the surface either as a pressure directed towards the surface (positive pressure) or as a suction directed away from the surface (negative pressure)
p_i	=	specified internal pressure acting statically and in a direction normal to the surface either as a pressure directed towards the surface (positive pressure) or as a suction directed away from the surface (negative pressure)
q	=	reference velocity pressure by geographic location for levels of probability having return periods of one in 50 years as listed in NBCC 2015 Appendix C of Division B for selected locations in Canada
C_e	=	exposure factor (see 3.3.3)
C_{ei}	=	exposure factor for internal pressure (see 3.3.3)

C_g	=	gust effect factor (see 3.3.4)
C_{gi}	=	internal gust effect factor (see 3.3.4)
C_p	=	external pressure coefficient averaged over the area of the surface considered (see 3.3.5)
C_{pi}	=	internal pressure coefficient (see 3.3.5)
C_t	=	topographic factor (see 3.3.6)
I_w	=	importance factor for wind load as provided in Table 3-1 (reproduced from NBCC 2015, Table 4.1.7.3)
ULS	=	Ultimate Limit State (e.g. strength)
SLS	=	Serviceability Limit State (e.g. deflection)

Table 3-1: Importance Factor for Wind Load, I_w
(See Table 1-1 for the Importance Category definitions)

Importance Category	Importance Factor, I_w	
	ULS	SLS
Low	0.8	0.75
Normal	1.0	0.75
High	1.15	0.75
Post-Disaster	1.25	0.75

3.3.2 Reference Height, h

The reference height, h, for pressures is the mid-height of the roof or 6 m, whichever is greater. The eave height, H, may be substituted for the mid-height of the roof if the roof slope is less than or equal to 7°. These conditions are illustrated in Figure 3-3.

Figure 3-3: Reference Heights

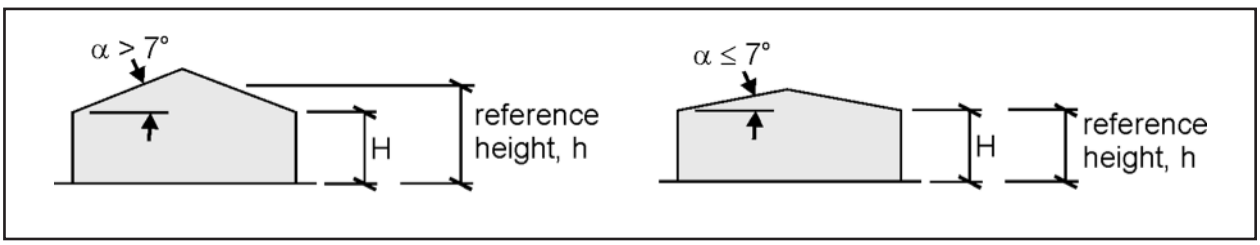

3.3.3 Exposure Factors, C_e and C_{ei}

The exposure factor, C_e, reflects the increase in wind speed with height and the effects of variation in the surrounding terrain.

a) For buildings in open level terrain with only scattered buildings, trees or other obstructions, open water or shorelines, the exposure factor may be taken as $(h/10)^{0.2}$ but not less than 0.9.

b) For buildings in rough terrain, where rough terrain is suburban, urban or wooded terrain extending upwind from the building uninterrupted for a least 1 km or 20 times the building height, whichever is greater, the exposure factor may be taken as $0.7(h/12)^{0.3}$ but not less than 0.7.

c) The exposure factors may be taken as a value intermediate between the two exposures defined in (a) and (b) in cases where the site is less than 1 km or 20 times the building height from a change in terrain conditions, whichever is greater, provided an appropriate interpolation method is used.

d) An appropriate value depending on both height and shielding may be selected for the exposure factor if a dynamic approach to the action of wind gusts is used.

The exposure factor for internal pressure, C_{ei}, shall be the same as the exposure factor for external pressure, C_e, calculated at a reference height, h, equal to the mid-height of the building of 6 m, whichever is less.

3.3.4 Gust Effect Factors, C_g and C_{gi}

Wind rarely blows at a constant velocity (implying a constant pressure) but comes in gusts, causing intermittently higher pressures. The gust effect factor, C_g, is used to account for this effect. Gusts not only affect the external pressures, but can also affect the internal pressures, depending on the size and distribution of openings in the building enclosure. The gust effect factor, C_g, is assumed to equal 2.0 for the building as a whole and main structural members; 2.5 for external pressures and suction on small elements including cladding; for internal pressure C_{gi} is taken as 2.0 or as determined by detailed calculation which accounts for the sizes of the openings in the building envelope, the internal volume and the flexibility of the building envelope; if a dynamic approach to wind action used, an appropriate value for C_{gi} can be selected depending on the turbulence of the wind and the size and natural frequency of the structure.

3.3.5 Pressure Coefficients, C_p and C_{pi}

The pressure coefficients C_p and C_{pi} are the non-dimensional ratios of wind-induced pressures on reference velocity pressure, q. Wind blowing around a building will create areas of localized pressures that are substantially higher or lower than the reference wind pressure, typically at wall corners and roof eaves. The external pressure coefficient, C_p, is used to modify the reference velocity pressure to reflect the pressure difference in specific areas. Internal pressures can also fluctuate significantly and are correlated to external pressure fluctuation, but C_{pi} is considered to be constant over the entire interior of the building surface.

3.3.6 Topographic Factor, C_t

The topographic factor, C_t, accounts for the increased wind speed on a hill or near an escarpment. C_t shall be taken as 1.0 except for buildings on hills or escarpments with a slope greater than 10%. The specific provisions of NBCC Sentence 4.1.7.4.2) should be reviewed.

3.3.7 Full and Partial Loading

Building and structural members shall be capable of withstanding the effects of

a) the full wind loads acting along each of the 2 principal horizontal axes considered separately;

b) the wind loads as described in (a) but with 100% of the load removed from any portion of the area;

c) the wind loads as in (a) but considered simultaneously at 75% of their value; and,

d) the wind loads as described in (c) but with 50% of these loads removed from any portion of the area.

3.3.8 Building Categories for Determination of Internal Pressures

The internal pressure due to wind ($I_w \cdot q \cdot C_e \cdot C_t \cdot C_{pi} \cdot C_{gi}$) is dependent upon the size and distribution of openings in the building enclosure. Figure 3-4 illustrates the basic principle of wind-induced internal air pressures.

For design purposes, a large or significant opening is a single or combination of openings on any one wall that offers an opening to the wind exceeding by a factor of 2 or more that of the estimated total leakage area of the remaining building surface including the roof. A large opening may result either from deliberate intent or failure to design an element, such as a window or door, for the appropriate wind pressure. If a door or window is designed to resist the relevant factored wind load, and is not required to be open during periods of high wind, then the area of the would be equivalent to the leakage area around the door or window assembly. For typical buildings, whose background leakage area is 0.1 percent of the total surface area, including the roof, an opening greater than 1 percent of the equivalent wall would constitute a "large" opening.

Figure 3-4: Effect of Openings on Internal Pressure

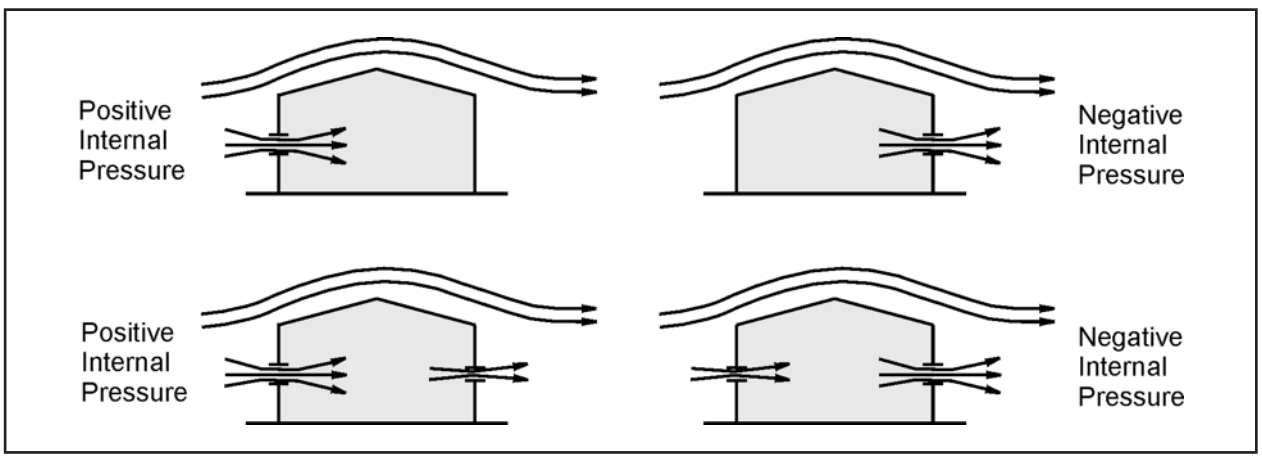

Three categories of building can be delineated as follows:

Category 1: Building with no "large" openings but having small ones uniformly distributed amounting to less than 0.1% of the total surface area. The value of C_{pi} should be -0.15 except where that alleviates an external load, when C_{pi} = 0 should be used. Buildings in this category would include most buildings that are nominally sealed and ventilated mechanically, and other buildings such as windowless warehouses with door systems not prone to storm damage.

Category 2: Buildings in this category have large openings that can be relied on to be closed during storms and small openings uniformly distributed. The value of C_{pi} should be -0.45 to +0.3. Examples would include buildings which, although nominally sealed, may experience a significant imbalance due to the air leakage around doors and windows or through other small openings.

Category 3: Buildings with "large" openings through gusts are transmitted to the interior. The value of C_{pi} should be -0.7 to +0.7. Such buildings would include, for example, sheds with one open side, and building with shipping doors, ventilators or the like which cannot be considered to be closed during a period of high wind.

Notes:
1. It is the responsibility of the party responsible for the design of the building to specify the appropriate building category for purposes of determining internal pressures; otherwise the SBS manufacture has no choice but to make a judgment decision based on the information available.
2. Windows and doors of an SBS supplied CSSBI members are designed according to the same criteria as the SBS as a whole.

3.4 Building Deflection under Wind Load

Typically, the horizontal deflection (drift) of an SBS is calculated based on the deflection of a single structural frame loaded by its portion of the specified wind load acting statically on the building. However, load sharing, diaphragm action, bracing and other factors contribute significantly to the effective stiffness of a complete SBS. Therefore, the actual drift due to dynamic wind is often but a fraction of the theoretical deflection of a single frame. It the stiffness of the building will be of particular importance to the intended occupancy, the SBS manufacturer should be consulted.

3.5 Explanation of Tables 3-2 through 3-7

Tables 3-2 through 3-7 in this Bulletin give the combined wind pressure coefficients C_pC_g and $C_{pi}C_{gi}$ for the principal structural elements of an SBS. To arrive at the specified internal and external pressures, the coefficients C_p , C_{pi}, C_g and C_{gi} are to be combined with the exposure factor, C_e, the topographic factor, C_t, and the reference velocity pressure, q (given in NBCC 2015 Appendix C of Division B). Allowances for partial loading are included, without the need for further calculations.

In the tables, z = 10% of the least horizontal dimension and 40% of the height, H, whichever is less. Also, z ≥ 1m and z ≥ 4% of the least horizontal dimension.

The sign convention used for the combined $C_pC_g + C_{pi}C_{gi}$ coefficient is taken with respect to the exterior surface (i.e. positive or negative pressures). In the tables, the number given in brackets after $C_{pi}C_{gi}$ (i.e. (1), (2), & (3)) indicates the building category for which the $C_{pi}C_{gi}$ coefficients apply. For building configurations not covered by these tables refer to NBCC 2015, Division B, Part 4.

The coefficients given in the tables are based on specific tributary areas (e.g. no more than 1 m^2 for cladding, not less than 10 m^2 for purlins and equal to 10 m^2 for girts) and are conservative if applied to larger areas.

For convenience, the exposure factor, C_e, is assumed to be the same for both external and internal pressure calculations. If the designer elects otherwise, the coefficients "$C_pC_g + C_{pi}C_{gi}$ " given in the following tables will have to be revised to become "$C_eC_pC_g + C_{ei}C_{pi}C_{gi}$".

3.6 Illustrative Example

3.6.1 Introduction

Consider an SBS building in Moose Jaw, SK, 20m wide x 50m long with an 8m eave height and a roof slope of 1:12 or 5°. The building has various openings, making it a "Category 2" type building. The external cladding and the internal liner sheet are assumed to act independently, i.e. non-composite wall construction. For this type of building the Importance Category is "Normal" and so the Importance Factor for Wind is I_w = 1.0. Assume the building is not located near a hill or escarpment, so C_t = 1.0.

3.6.2 Hourly Wind Pressure, q

Refer to NBCC 2015 Division B, Appendix C for the tabulated values of hourly wind pressures for selected locations in Canada. Moose Jaw, SK has the following hourly wind pressure:

q(1/50) = 0.52 kPa

3.6.3 Exposure Factor, C_e

The exposure factor can be calculated using the "1/5 power law".

$$C_e = \left(\frac{h}{10}\right)^{0.2} = \left(\frac{8}{10}\right)^{0.2} = 0.96, \text{ use } 1.0$$

3.6.4 Determine the 'z' Factor

The magnitude of 'z' must be determined to define the areas of localized high pressures and is dependent on the building size.

z = (0.10)(20m) = 2 m
but
z ≤ (0.40)(8m) = 2.4 m
and
z ≥ 1 m
and
z ≥ (0.04)(20m) = 0.8 m

∴ z = 2 m

3.6.5 Internal Pressure on Liner Sheet

Since the building walls and roof are constructed non-compositely (i.e. the cladding and liner sheet act independently) the liner sheet must be capable of resisting the internal air pressure,

$$p_i = I_w \cdot q \cdot C_{ei} \cdot C_t \cdot C_{pi} C_{gi}$$

where

I_w = 1.0
q = 0.52
C_{ei} = 1.0
C_t = 1.0
$C_{pi}C_{gi}$ = -0.9, +0.6 (Category 2)

Therefore

p_i = (1.0)(0.52)(1.0)(1.0)(-0.90) = -0.47 kPa, or
p_i = (1.0)(0.52)(1.0)(1.0)(+0.60) = +0.31 kPa

3.6.6 Wind Induced Pressures on Roof Cladding

For a building with a roof slope of less than 7°, the wind will cause a negative pressure (uplift) on the roof cladding, with localized higher pressures, and a uniform positive pressure.

$$p = I_w \cdot q \cdot C_e \cdot C_t \cdot C_p C_g$$

where

I_w = 1.0
q = 0.52
C_e = 1.0
C_t = 1.0
$C_p C_g$ are taken from Table 3-2(A)

For area 'r', $C_p C_g$ = +0.5, -1.8

p = (1)(0.52)(1)(1)(+0.5) = +0.26 kPa
p = (1)(0.52)(1)(1)(-1.8) = -0.94 kPa

For area 's', $C_p C_g$ = +0.5, - 2.5

p = (1)(0.52)(1)(1)(+0.5) = +0.26 kPa
p = (1)(0.52)(1)(1)(-2.5) = -1.30 kPa

For area 'c', $C_p C_g$ = +0.5, - 5.4

p = (1)(0.52)(1)(1)(+0.5) = +0.26 kPa
p = (1)(0.52)(1)(1)(-5.4) = -2.81 kPa

Considering a tributary area of 1.0 m², the resulting wind pressures are shown in Figure 3-5.

Figure 3-5: Pressures on Roof Cladding

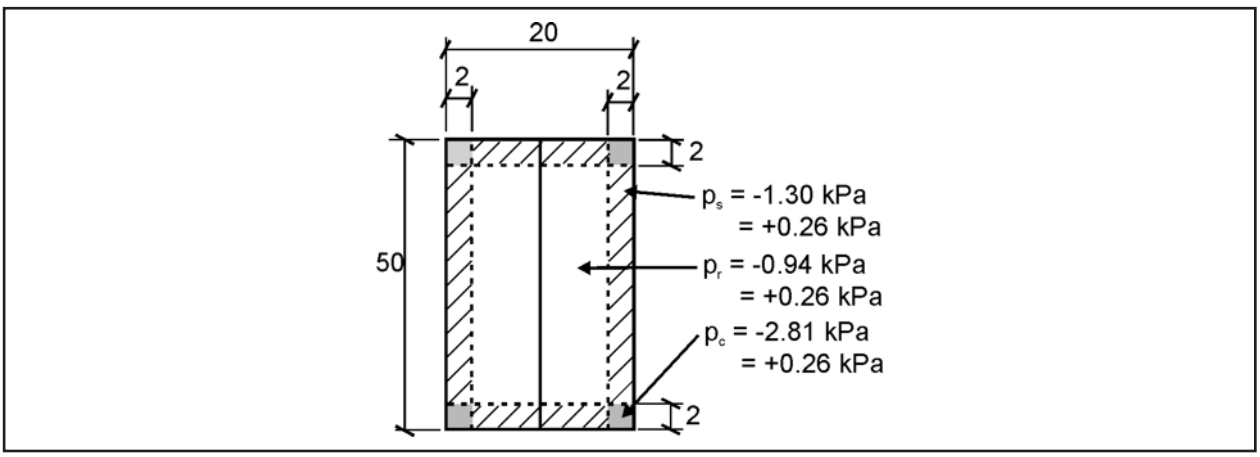

3.6.7 Wind Induced Loads on Roof Purlins

The wind-induced pressure on the roof cladding will be carried in turn by the roof purlins. In addition, the internal pressure on the roof liner sheet will also be carried by the roof purlins. The wind pressure loading on the roof purlins can be calculated from the wind pressure distribution given below. To calculate the load on the purlin, multiply the pressure by the tributary area.

$$p = I_w \cdot q \cdot C_e \cdot C_t \cdot (C_p C_g + C_{pi} C_{gi})$$

where

I_w =1.0
q =0.52
C_e = 1.0
C_t = 1.0
$C_p C_g + C_{pi} C_{gi}$ are taken from Table 3-3(A)

For area 'r', $C_p C_g$ = +1.2, -2.1
p = (1)(0.52)(1)(1)(+0.9) = +0.62 kPa
p = (1)(0.52)(1)(1)(-2.4) = -1.09 kPa

For area 's', $C_p C_g$ = +1.2, - 2.6
p = (1)(0.52)(1)(1)(+0.9) = +0.62 kPa
p = (1)(0.52)(1)(1)(-2.9) = -1.35 kPa

For area 'c', $C_p C_g$ = +1.2, - 2.6
p = (1)(0.52)(1)(1)(+0.9) = +0.62 kPa
p = (1)(0.52)(1)(1)(-2.9) = -1.35 kPa

The resulting wind pressures are shown in Figure 3-6.

Figure 3-6: Pressures Transferred to Roof Purlins

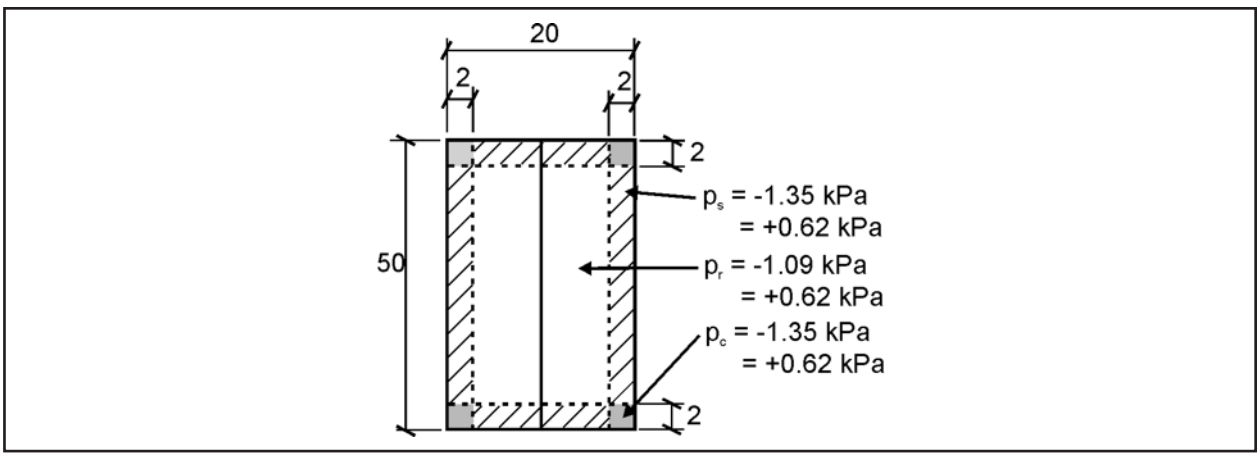

3.6.8 Wind Induced Pressure on Wall Cladding

Wind acting on a building can come from any direction and, therefore, can cause either positive or negative pressures on the wall cladding with higher localized pressures at the corners.

$$p = I_w \cdot q \cdot C_e \cdot C_t \cdot C_p C_g$$

where

I_w =1.0
q =0.52
C_e = 1.0
C_t = 1.0
$C_p C_g$ are taken from Table 3-4

For area 'w', $C_p C_g$ = +1.8, -1.8

p = (1)(0.52)(1)(1)(+1.8) = +0.94 kPa
p = (1)(0.52)(1)(1)(-1.8) = -0.94 kPa

For area 'e', $C_p C_g$ = +1.8, -2.1

p = (1)(0.52)(1)(1)(+1.8) = +0.94 kPa
p = (1)(0.52)(1)(1)(-2.1) = -1.09 kPa

The resulting wind pressures are shown in Figure 3-7.

Figure 3-7: Pressures on Wall Cladding

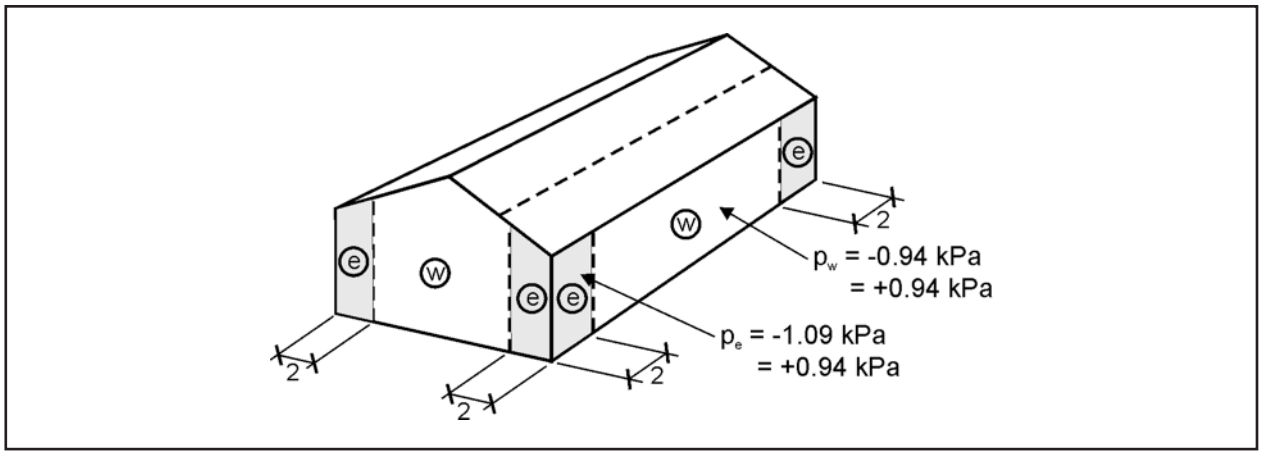

3.6.9 Wind Induced Loads on Wall Girts

The wind induced pressure on the wall cladding and the interior wall liner sheet both act on the wall girts. The wind pressure loading on the wall girts can be calculated from the wind pressure distribution given below.

To calculate the load on a girt, multiply the pressure by the tributary area of the girt.

$$p = I_w \cdot q \cdot C_e \cdot C_t \cdot (C_p C_g + C_{pi} C_{gi})$$

where

I_w =1.0
q =0.52
C_e = 1.0
C_t = 1.0
$C_p C_g + C_{pi} C_{gi}$ are taken from Table 3-5

For area 'w', $(C_p C_g + C_{pi} C_{gi})$ = +2.4, -2.2

p = (1)(0.52)(1)(1)(+2.4) = +1.25 kPa
p = (1)(0.52)(1)(1)(-2.2) = -1.14 kPa

For area 'e', $(C_p C_g + C_{pi} C_{gi})$ = +2.4, -2.3

p = (1)(0.52)(1)(1)(+2.4) = +1.25 kPa
p = (1)(0.52)(1)(1)(-2.3) = -1.20 kPa

The resulting wind pressures are shown in Figure 3-8.

Figure 3-8: Pressures Transferred to Wall Girts

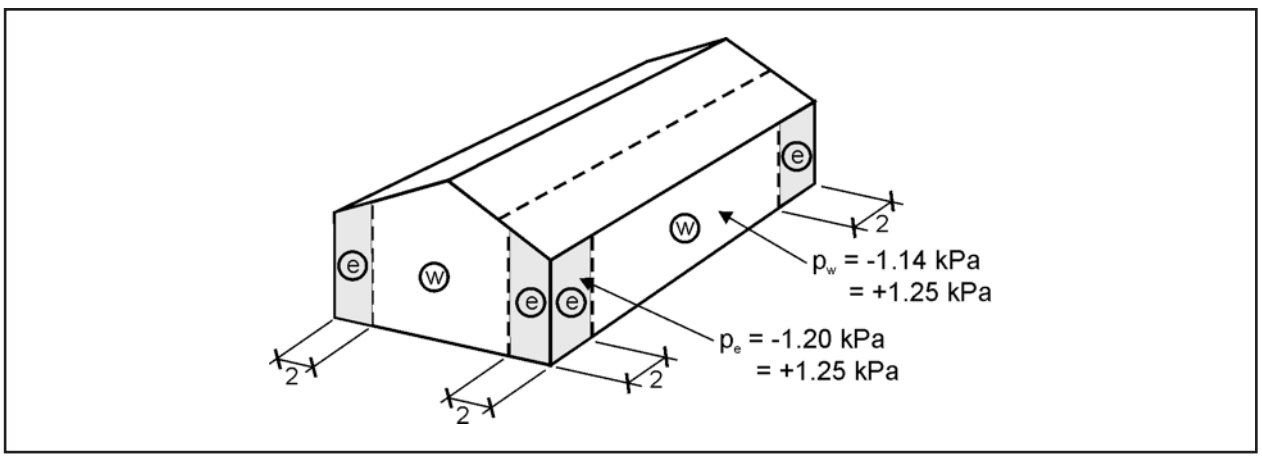

3.6.10 Wind Induced Loads on Interior Frames

The wind induced pressure on the wall and roof cladding is transferred through the girts and purlins and acts on the structural frames. To calculate the wind induced load on an interior frame, multiply the pressure shown below by the tributary areas of the purlins and girts to obtain reactions which will act on the structural frames as a series of point loads. Note that the wind can blow from either direction.

Design Case 1: External wind pressures acting on all external surfaces simultaneously.

$$p = I_w \cdot q \cdot C_e \cdot C_t \cdot C_p C_g$$

where

I_w = 1.0
q = 0.52
C_e = 1.0
C_t = 1.0
$C_p C_g$ are taken from Table 3-6 for an interior frame

For area (1), $C_p C_g$ = +0.75, p = (1)(0.52)(1)(1)(+0.75) = +0.39 kPa
For area (2), $C_p C_g$ = -1.30, p = (1)(0.52)(1)(1)(-1.30) = -0.68 kPa
For area (3), $C_p C_g$ = -0.70, p = (1)(0.52)(1)(1)(-0.70) = -0.36 kPa
For area (4), $C_p C_g$ = -0.55, p = (1)(0.52)(1)(1)(-0.55) = -0.29 kPa

The resulting wind pressures are shown in Figure 3-9.

Figure 3-9: Design Case 1 Frame Loading

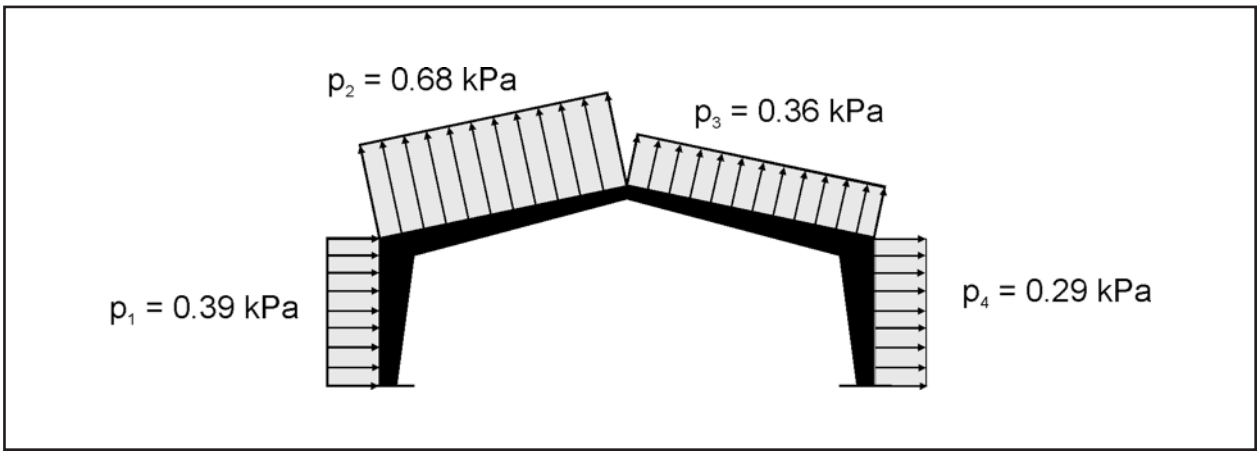

Design Case 2: External wind pressures plus internal wind pressures acting together.

$$p = I_w \cdot q \cdot C_e \cdot C_t \cdot (C_p C_g + C_{pi} C_{gi})$$

where,

I_w =1.0
q =0.52
C_e = 1.0
C_t = 1.0
$C_p C_g$ are taken from Table 3-6 for an interior frame
$C_{pi} C_{gi}$ = -0.90 or +0.60

The sign convention is relative to the external cladding surface. Therefore, the internal pressure coefficients change sign.

For a positive internal pressure ($C_{pi} C_{gi}$ = +0.60).
For area (1), p = (1)(0.52)(1)(1)(+0.75 –0.60) = +0.08 kPa
For area (2), p = (1)(0.52)(1)(1)(-1.30 –0.60) = -0.99 kPa
For area (3), p = (1)(0.52)(1)(1)(-0.70 –0.60) = -0.68 kPa
For area (4), p = (1)(0.52)(1)(1)(-0.55 –0.60) = -0.60 kPa

For a negative internal pressure ($C_{pi} C_{gi}$ = -0.90)
For area (1), p = (1)(0.52)(1)(1)(+0.75 +0.90) = +0.86 kPa
For area (2), p = (1)(0.52)(1)(1)(-1.30 +0.90) = -0.21 kPa
For area (3), p = (1)(0.52)(1)(1)(-0.70 +0.90) = +0.10 kPa
For area (4), p = (1)(0.52)(1)(1)(-0.55 +0.90) = +0.18 kPa

The resulting wind pressures are shown in Figure 3-10.

Figure 3-10: Design Case 2 Frame Loading

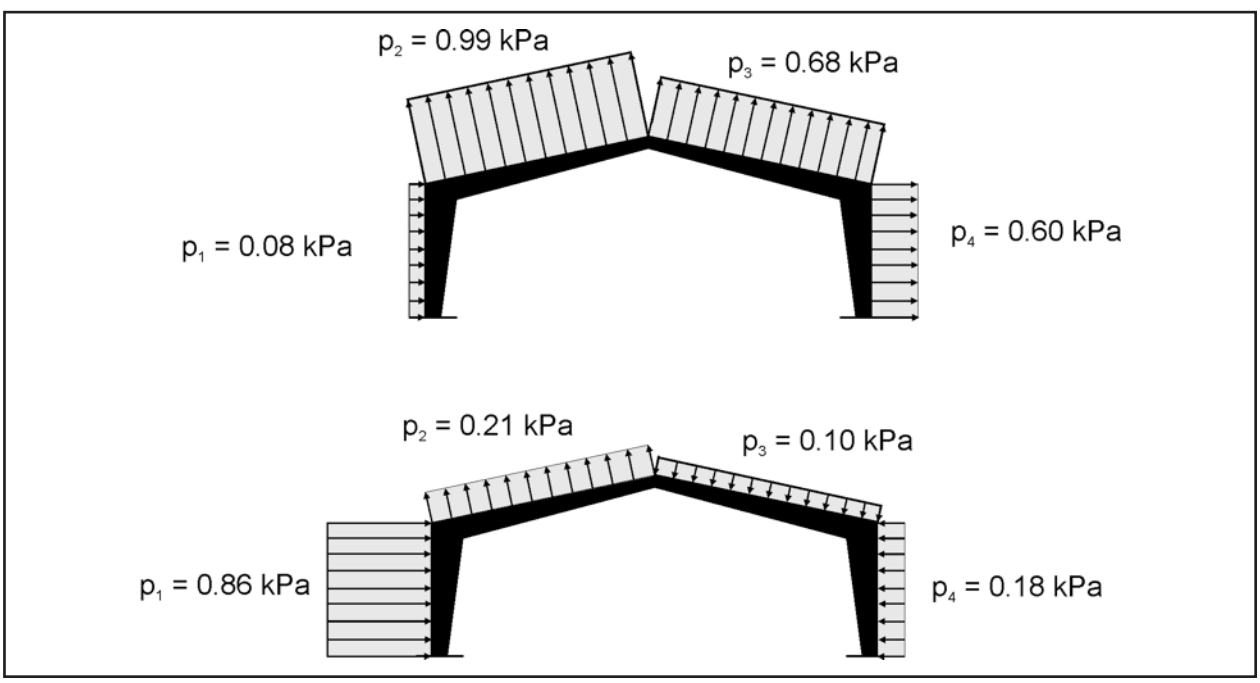

Table 3-2: Roof Cladding

(A) FOR ROOF SLOPES OF 7° OR LESS

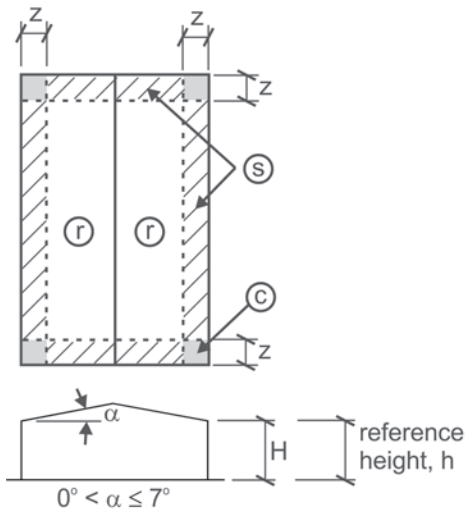

Building Category		r	s	c	
	C_pC_g	+0.5 -1.8	+0.5 -2.5	+0.5 -5.4	Non-composite interior and exterior sheets
(3)	$C_{pi}C_{gi}$	±1.4	±1.4	±1.4	
(2)	$C_{pi}C_{gi}$	+0.6 -0.9	+0.6 -0.9	+0.6 -0.9	
(1)	$C_{pi}C_{gi}$	+0.0 -0.3	+0.0 -0.3	+0.0 -0.3	
(3)	$C_pC_g + C_{pi}C_{gi}$	+1.9 -3.2	+1.9 -3.9	+1.9 -6.8	Single sheet or composite interior plus exterior sheet
(2)	$C_pC_g + C_{pi}C_{gi}$	+1.4 -2.4	+1.4 -3.1	+1.4 -6.0	
(1)	$C_pC_g + C_{pi}C_{gi}$	+0.8 -1.8	+0.8 -2.5	+0.8 -5.4	

(B) FOR ROOF SLOPES GREATER THAN 7°, BUT NOT GREATER THAN 27°

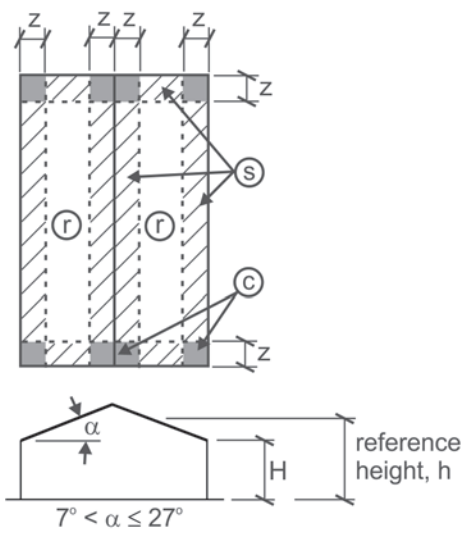

Building Category		r	s	c	
	C_pC_g	+0.8 -2.4	+0.8 -3.6	+0.8 -5.0	Non-composite interior and exterior sheets
(3)	$C_{pi}C_{gi}$	±1.4	±1.4	±1.4	
(2)	$C_{pi}C_{gi}$	+0.6 -0.9	+0.6 -0.9	+0.6 -0.9	
(1)	$C_{pi}C_{gi}$	+0.0 -0.3	+0.0 -0.3	+0.0 -0.3	
(3)	$C_pC_g + C_{pi}C_{gi}$	+2.2 -3.8	+2.2 -5.0	+2.2 -6.4	Single sheet or composite interior plus exterior sheet
(2)	$C_pC_g + C_{pi}C_{gi}$	+1.7 -3.0	+1.7 -4.2	+1.7 -5.6	
(1)	$C_pC_g + C_{pi}C_{gi}$	+1.1 -2.4	+1.1 -3.6	+1.1 -5.0	

NOTES:

- Coefficients are based on a tributary area ≤ 1 m² and are conservative for larger areas
- For larger tributary areas, refer to Figures 4.1.7.6.-C and –E in NBCC 2015, Division B
- q should be selected on a 1 in 50 year return period
- z is defined in Section 3.5 of the preceding text
- Coefficients are appropriate in all wind directions
- For roofs with parapets, refer to Notes 6 & 7, Figure 4.1.7.6.-C in NBCC 2015, Division B

Table 3-3: Purlins

(A) FOR ROOF SLOPES OF 7° OR LESS

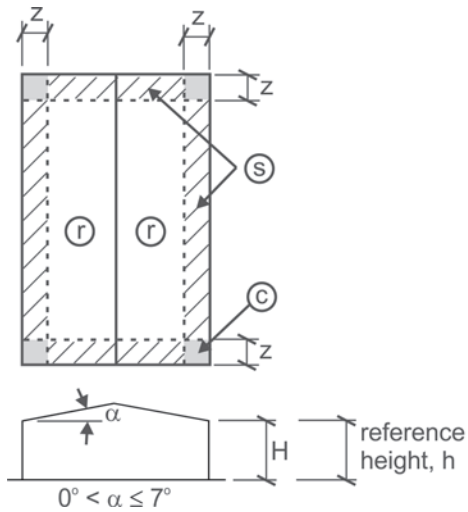

Building Category		r	s	c
	C_pC_g	+0.3 -1.5	+0.3 -2.0	+0.3 -2.0
(3)	$C_pC_g + C_{pi}C_{gi}$	+1.7 -2.9	+1.7 -3.4	+1.7 -3.4
(2)	$C_pC_g + C_{pi}C_{gi}$	+1.2 -2.1	+1.2 -2.6	+1.2 -2.6
(1)	$C_pC_g + C_{pi}C_{gi}$	+0.6 -1.5	+0.6 -2.0	+0.6 -2.0

(B) FOR ROOF SLOPES GREATER THAN 7°, BUT NOT GREATER THAN 27°

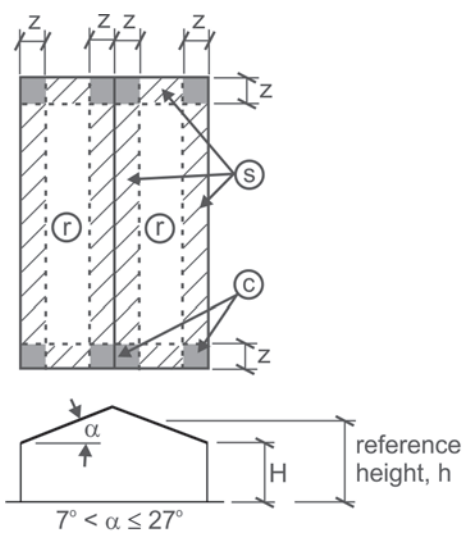

Building Category		r	s	c
	C_pC_g	+0.5 -2.0	+0.5 -2.6	+0.5 -4.0
(3)	$C_pC_g + C_{pi}C_{gi}$	+1.9 -3.4	+1.9 -4.0	+1.9 -5.4
(2)	$C_pC_g + C_{pi}C_{gi}$	+1.4 -2.6	+1.4 -3.2	+1.4 -4.6
(1)	$C_pC_g + C_{pi}C_{gi}$	+0.8 -2.0	+0.8 -2.6	+0.8 -4.0

NOTES:

- Coefficients are based on a tributary area ≥ 10 m²
- For smaller tributary areas, refer to Figures 4.1.7.6.-C and –E in NBCC 2015, Division B
- q should be selected on a 1 in 50 year return period
- z is defined in Section 3.5 of the preceding text
- Coefficients are appropriate in all wind directions

Table 3-4: Wall Cladding

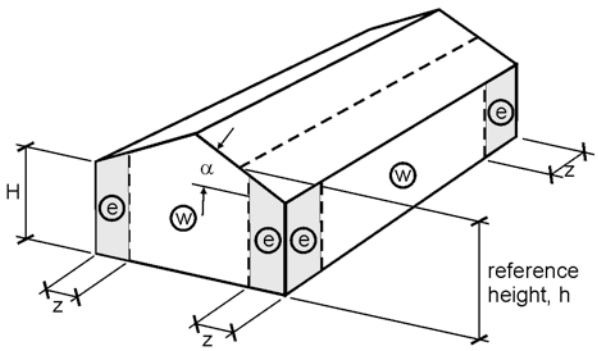

Building Category		w		e		
	C_pC_g	+1.8	-1.8	+1.8	-2.1	Non-composite interior and exterior sheets
(3)	$C_{pi}C_{gi}$	-1.4	+1.4	-1.4	+1.4	
(2)	$C_{pi}C_{gi}$	-0.9	+0.6	-0.9	+0.6	
(1)	$C_{pi}C_{gi}$	-0.3	+0.0	-0.3	+0.0	
(3)	$C_pC_g + C_{pi}C_{gi}$	+3.2	-3.2	+3.2	-3.5	Single sheet or composite interior plus exterior sheet
(2)	$C_pC_g + C_{pi}C_{gi}$	+2.7	-2.4	+2.7	-2.7	
(1)	$C_pC_g + C_{pi}C_{gi}$	+2.1	-1.8	+2.1	-2.1	

NOTES:

- Coefficients are based on a tributary area ≤ 1 m² and are conservative for larger areas
- For larger tributary areas, refer to Figure 4.1.7.6.-B in NBCC 2015, Division B
- q should be selected on a 1 in 50 year return period
- z is defined in Section 3.5 of the preceding text
- Coefficients are appropriate in all wind directions
- This table applies to buildings with any roof slope α

Table 3-5: Girts and Endwall Columns

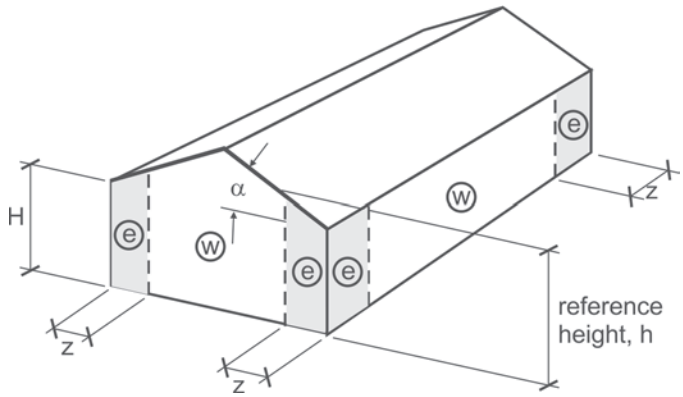

(A) GIRTS

Building Category		w		e	
	C_pC_g	+1.5	-1.6	+1.5	-1.7
(3)	$C_{pi}C_{gi}$	-1.4	+1.4	-1.4	+1.4
(2)	$C_{pi}C_{gi}$	-0.9	+0.6	-0.9	+0.6
(1)	$C_{pi}C_{gi}$	-0.3	+0.0	-0.3	+0.0
(3)	$C_pC_g + C_{pi}C_{gi}$	+2.9	-3.0	+2.9	-3.1
(2)	$C_pC_g + C_{pi}C_{gi}$	+2.4	-2.2	+2.4	-2.3
(1)	$C_pC_g + C_{pi}C_{gi}$	+1.8	-1.6	+1.8	-1.7

(B) ENDWALL COLUMNS

Building Category		w		e	
	C_pC_g	+0.75	-0.55	+1.15	-0.80
(3)	$C_pC_g + C_{pi}C_{gi}$	+2.15	-1.95	+2.55	-2.20
(2)	$C_pC_g + C_{pi}C_{gi}$	+1.65	-1.15	+2.05	-1.40
(1)	$C_pC_g + C_{pi}C_{gi}$	+1.05	-0.55	+1.45	-0.80

NOTES:

- Coefficients in Table (A) are based on a tributary area = 10 m² and are conservative for larger areas. For other tributary areas, refer to Figure 4.1.7.6.-B in NBCC 2015, Division B.
- Coefficients in Table (B) are independent of tributary area and are based on Figure 4.1.7.6.-A in NBCC 2015, Division B
- q should be selected on a 1 in 50 year return period
- z is defined in Section 3.5 of the preceding text
- Coefficients are appropriate in all wind directions
- This table applies to buildings with any roof slope, α

Table 3-6: Rigid Frames Perpendicular to Sidewall

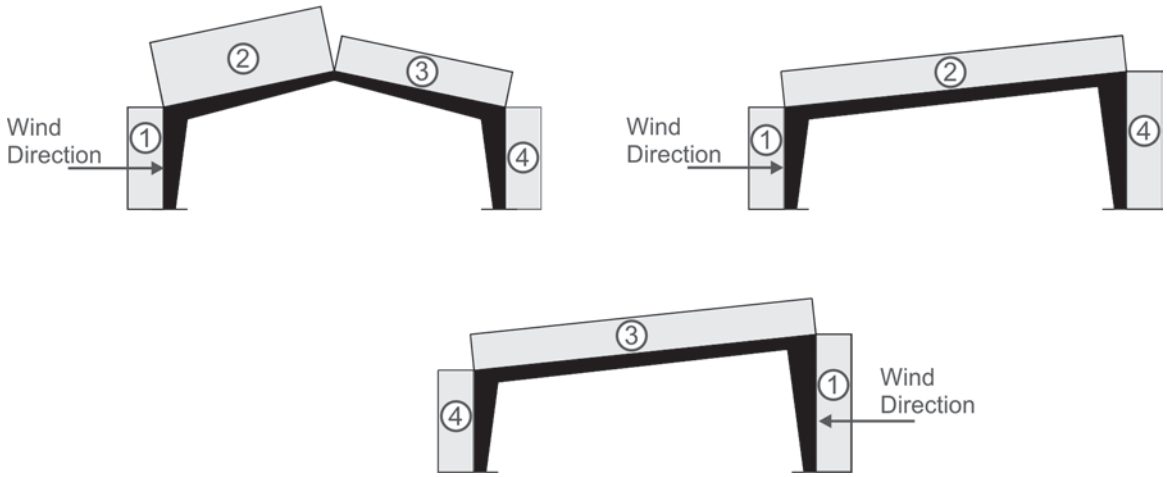

(A) FOR ROOF SLOPES OF 5° OR LESS

	1	2	3	4	
C_pC_g	+1.15	-2.00	-1.00	-0.80	Endwall
C_pC_g	+0.95	-1.65	-0.85	-0.68	1st Interior Frame
C_pC_g	+0.75	-1.30	-0.70	-0.55	Interior Frame

DESIGN CASE 1 - External wind loads on all surfaces simultaneously
DESIGN CASE 2 – External wind loads plus internal pressures

(B) FOR ROOF SLOPES OF 20°

	1	2	3	4	
C_pC_g	+1.50	-2.00	-1.30	-1.20	Endwall
C_pC_g	+1.25	-1.65	-1.10	-1.00	1st Interior Frame
C_pC_g	+1.00	-1.30	-0.90	-0.80	Interior Frame

NOTES:
- For roof slopes between 5° and 20°, linear interpolation between the two tables is appropriate
- Frames shall be designed for wind blowing from either direction
- q should be selected on a 1 in 50 year return period
- Coefficients are from Load Case A in Figure 4.1.7.6.-A in NBCC 2015, Division B
- Values for the 1st Interior Frame are interpolations between the values for the Endwall and Interior Frame

Table 3-7: Longitudinal Bracing

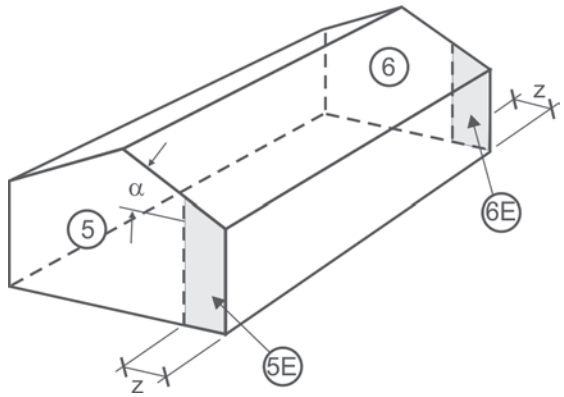

	5	5E	6	6E
C_pC_g	+0.75	+1.15	-0.55	-0.80

NOTES:

- Bracing is to resist the wind loads on the endwalls
- Braces shall be designed to resist wind loads from either direction
- This table applies to any roof slope
- z is defined in Section 3.5 of the preceding text
- Coefficients are from Load Case B in Figure 4.1.7.6.-A in NBCC 2015, Division B

4 Minimum Live Loads Due to Earthquake

4.1 General

The design for live loads due to earthquakes assumes that the force generated from a ground motion is applied as a horizontal shear force, V, located at the base of the structure. The base shear force is translated into lateral forces at each storey level in proportion to the distribution of mass within the building. The base shear and lateral forces are calculated for both principal directions of the building, which must be considered separately in the overall building structural design.

With the increased complexities inherent in the NBCC 2015, it is beyond the scope of this bulletin to present all of the details for determining the earthquake loads: expert guidance is recommended.

4.2 The Design Process (Equivalent Static Force Procedure)

NBCC 2015 stipulates one of three approaches for determining the design earthquake loads: the *Dynamic Analysis Procedure* (default), the *Equivalent Static Force Procedure*, or a simplified static force procedure. The Equivalent Static Force Procedure is an upper bound method applicable to structures that satisfy very specific requirements. The simplified static force procedure (not identified by that description in NBCC) is an optional modified version of the Equivalent Static Force Procedure for conditions of low seismic effect which were not required to be considered in NBCC 2010. The steps listed in Table 4-1 provide a flowchart of the design process using the simplified and Equivalent Static Force Procedures. Many steel building systems would qualify to be designed using these static force methods, and so the requirements are presented here. Other references are necessary for applying the Dynamic Analysis Procedure, which is beyond the scope of this bulletin.

Table 4-1: Flowchart for the Simplified and Equivalent Static Force Procedures

Step	Task	NBCC 2015 Reference
Major Change in NBC 2015: Seismic Analysis is mandatory for all sites. A Simplified Static Force Procedure is provided which applies to most cases for which seismic effects were not required to be considered in NBC 2010 (e.g. when S(0.2) < 0.12)		
1	Determine $S_a(T)$, PGA for site location from Table C-3, Appendix C of Division B, or as provided by geotechnical analysis	1.1.3
2	Determine if Simplified Static Force Procedure can be used Determine Earthquake Importance Factor I_E from Table 4.1.8.5 Determine F_s based on information from geotechnical report Determine site specific 5% damped spectral response acceleration for $S_a(0.2)$ and $S_a(2.0)$ (per Step 1). If $I_E F_s S_a(0.2) < 0.16$ AND $I_E F_s S_a(2.0) < 0.03$ then the simplified procedure described in sentences 4.1.8.1.3) to 15) may be used. Other limitations may apply within the simplified procedure based on SFRS, material, building height, etc. Determine T_s, R_s, W_t, $S_a(T_s)$ for simplified procedure Force Distribution F_x at level x If the simplified procedure applies, proceed to Step 12. Otherwise, continue for Equivalent Static Force Procedure	4.1.8.1.2) 4.1.8.1.2)a) 4.1.8.1.2)b) 4.1.8.1.2)c) 4.1.8.1.3) to 15) 4.1.8.1.7) 4.1.8.1.8)
3	Establish the intended Seismic Force Resisting Systems (SFRS) and confirm that there are no stiff elements affecting the SFRS response by adding stiffness or unintended load paths.	4.1.8.3.1) to 8)
4	Obtain site properties: $S_a(T)$, PGA obtained from Step 1 Determine Site Class (A to F) as described in Table 4.1.8.4.-A per geotechnical engineer Determine PGA_{ref} for use with Tables 4.1.8.4.-B to I. Determine F(T) site coefficient for design spectral acceleration for period T, as F(0.2), … F(10.0), as required from Tables 4.1.8.4.-B to I. If Site Class is F then values for F(T) must be provided by geotechnical investigation. Determine the site coefficients F_a and F_v for use in conditional sentences for limit values $I_E F_a S_a(0.2)$ and $I_E F_v S_a(2.0)$. F_a = F(0.2) from Table 4.1.8.4.-B F_v = F(1.0) from Table 4.1.8.4.-D Calculate design spectral response acceleration ratios S(T) for T=0.2, … 10.0 s Short-cut: Only values of T bounding the approximated design building period T_a are required (e.g. if it is anticipated that $T_a \leq 1.0$ s, it is not required to determine S(10.0), F(10.0), etc.).	4.1.8.4 4.1.8.4.1) 4.1.8.4.2) & 3) 4.1.8.4.4) 4.1.8.4.5) 4.1.8.4.6) 4.1.8.4.7) 4.1.8.4.9)
5	Determine Earthquake Importance Factor I_E (from Table 4.1.8.5)	4.1.8.5.1)
6	Determine structural configuration (irregularities) per Table 4.1.8.6	4.1.8.6
7	Equivalent Static Force Procedure is permitted if structure is within specific limits for period (T_a), height and structural irregularities.	4.1.8.7

Table 4-1: Flowchart for the Simplified and Equivalent Static Force Procedures		
Step	**Task**	**NBCC 2015 Reference**
Major Change in NBC 2015: Seismic Analysis is mandatory for all sites. A Simplified Static Force Procedure is provided which applies to most cases for which seismic effects were not required to be considered in NBC 2010 (e.g. when S(0.2) < 0.12)		
8	Determine SFRS Ductility and Overstrength Factors from Table 4.1.8.9, with consideration of multiple bracing systems Ductility factor, R_d Overstrength factor, R_o	4.1.8.9
9	Resolve Additional System Restrictions (Other than I_E in Step 5, this is the only Article in which Post-Disaster Category influences lateral earthquake force variables)	4.1.8.10
10	Determine lateral force variables for Equivalent Static Force Procedure. Fundamental lateral Period, T_a, for each orthogonal direction. Interpolate $S(T_a)$ based on design spectral acceleration S(T) values from Step 4. Building weight, W Higher mode factor, M_v and associated base overturning moment reduction factor J per Table 4.1.8.11	4.1.8.11 4.1.8.11.3) to 4) 4.1.8.11.5) 4.1.8.11.6)
11	Calculate static earthquake loads Lateral earthquake force, V Force distribution, F_t (top) and F_x along height. Overturning moments, M_x Torsional effects, if appropriate. Certain torsional conditions may revert to Dynamic analysis.	 4.1.8.11.2) 4.1.8.11.7) 4.1.8.11.8) 4.1.8.11.9) & 10) 4.1.8.11.11)
12	Apply loads in static analysis model with consideration of force distribution	4.1.8.11.1)

4.3 Notations

F_a	=	acceleration-based site coefficient
F_v	=	velocity-based site coefficient
F_s	=	site coefficient from 4.1.8.1.2).
F(T)	=	site coefficient for spectral acceleration
F_t	=	portion of V to be concentrated at the top of the structure
F_x	=	lateral force applied to level x
I_E	=	earthquake importance factor of the structure
J	=	numerical reduction coefficient for base overturning moment
M_v	=	factor to account for higher mode effect on base shear
M_x	=	overturning moment at level x
PGA	=	Peak Ground Acceleration expressed as a ratio of gravitational acceleration
PGA_{ref}	=	reference PGA for determining F(T)
R_d	=	ductility-related force modification factor reflecting the capability of a structure to dissipate energy through inelastic behaviour
R_o	=	overstrength-related force modification factor accounting for the dependable portion of reserve strength in a structure designed according to the NBCC 2015
R_s	=	combined ductility and over strength related factor from 4.1.8.1.7).
S(T)	=	design spectral response acceleration, expressed as a ratio to gravitational acceleration, for a period of T
$S_a(T)$	=	5% damped spectral response acceleration, expressed as a ratio to gravitational acceleration, for a period of T
SFRS	=	Seismic Force Resisting System(s) is that part of the structural system that has been considered in the design to provide the required resistance to the earthquake forces and effects
T	=	period in seconds
T_a	=	fundamental lateral period of vibration of the building, in seconds, in the direction under consideration
T_s	=	fundamental lateral period of vibration of the building, in seconds, in the direction under consideration from 4.1.8.1.7).
V	=	lateral earthquake design force at the base of the structure
V_s	=	lateral earthquake design force at the base of the structure from 4.1.8.1.7).
W	=	dead load, except that the minimum partition load need not exceed 0.5 kPa, plus 25% of the design snow load plus 60% of the storage load for areas used for storage, except that storage garages need not be considered storage areas, and the full contents of any tanks
W_t	=	sum of weight over the height of the building from 4.1.8.1.7).

5 Crane Load Design Criteria

5.1 Crane Types

Steel Building Systems can support several different types of crane systems when required. The typical crane types are Top Running Bridge, Under Hung Bridge and Monorail, and floor mounted or column mounted Jib cranes. Larger capacity cranes are usually electric powered. Cranes can be provided in several styles based on the required capacity, span and service class.

Top Running cranes are supported by the bridge end trucks bearing on rails that are supported on top of their runway beams. These cranes have the greatest variation in capacity, span and service class and usually span the full width of the framing supports.

Figure 5-1: Top Running Crane

Under Hung cranes are supported by using a runway beam connected to the bottom of a frame. The crane wheels run on the bottom flange of the runway beams spanning between frames. The under hung bridge will usually only span a portion of the column to column width of the structure. Lift capacity is typically smaller than top running cranes.

Figure 5-2: Under Hung Crane

Jib cranes are specialty cranes for a specific location and utility. They consist of a travelling hoist on a fixed length horizontal boom that can rotate about the supporting column. They are commonly used for material handling at a work station. Jib cranes attached to a column flange can allow a rotation of more than 180 degrees. Considering the rotation of the load, bi-axial bending and torsion influence the design of the supporting column.

Figure 5-3: Floor Mounted Jib Crane

5.2 Crane Service

Cranes are classified based on their frequency of operation called a *Duty Cycle* varying from Class A to F by CMAA. A Class A crane is for more infrequently used moderate cranes and a Class F is for a heavy duty continuous severe service. The service of the crane is based on the quantity of partial and full lifts during a specified period of operation and does not limit the capacity of the crane.

SBS buildings that support cranes should be evaluated based on the structure service class described in the *CISC Crane-Supporting Steel Structures: Design Guide*.

5.3 Top Running Cranes

Top running cranes are the most common type of crane that SBS buildings are designed to support. The capacity of the crane is based on the magnitude of the *Lifted Load*. The *Lifted Load*, *Span* and *Service* define the crane member sizes, girder type and configuration. *Single Girder* cranes with a capacity of 10 tonnes usually span up to 15 m. *Double Girder* cranes with a capacity of 25 tonnes usually span up to 20 m. *Box Girder* cranes used for specialized applications requiring heavy lifts (100 tonnes) or longer spans (30 m).

The function of a crane is to move the lifted load horizontally and longitudinally in the building. The lifted load is usually supported with a hook, which is cabled to a hoist. The hoist is supported by a trolley which moves horizontally along the crane bridge. The crane bridge is connected to crane trucks at each end depending on the capacity and span. The crane trucks can have 2 to 8 wheels per side. The wheels ride along a crane rail which is supported by runway beams. The sketch in Figure 5-4 illustrates the basic crane components and some of the defined dimensions.

The crane span is defined as the horizontal distance from center to center of the crane wheel supports. The horizontal crane coverage is defined as the crane span less the hook approach on each side. Side clearances are measured from the center of the supporting rail to the face of the supporting column and are required for operation, safety, and wheel maintenance.

The hook height is the distance from the datum to the highest position of the hook. The crane must be able to travel within the building avoiding obstructions in the building such as lights, equipment and the structural framing. The vertical clearance is measured from the top of the crane rail to the underside of the structure. This clearance is based on the size of the crane bridge, location of the hoist and trolley, rail and a safety allowance.

Figure 5-4: Crane Components and Definitions

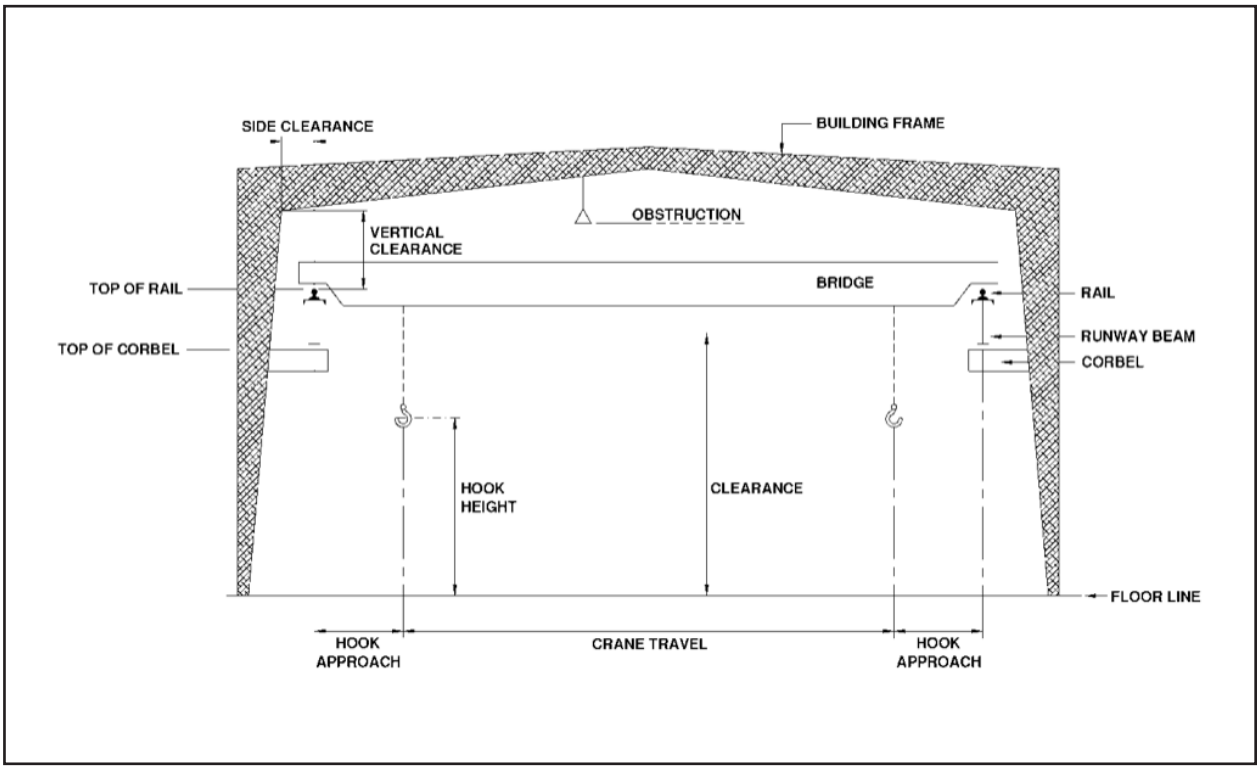

5.4 Deflections

Service requirements of the crane system and crane supporting structural system are suggested in the CSA-S16 *Design of Steel Structures* and the *CISC Crane-Supporting Steel Structures: Design Guide*. Unfactored crane loads without impact are used to calculate the deflections. The common vertical deflection limit for runway beams is L/600 for class A, B, and C cranes, L/800 for class D, and L/1000 for classes E and F. The common horizontal deflection limit of runway beams is L/400. The permissible lateral deflection of the crane supporting structural system is based on unfactored crane loads, or unfactored 1 in 50 wind loads with Importance Factor I_w = 0.75, and shall not exceed 50 mm for cab operated cranes. Special design considerations may be required for any crane installations. The permissible lateral deflection of the structure is CH/240 for class A, B and C cranes, and CH/400 for class D, E and F cranes. There is an exception for frames supporting pendant-operated cranes, which has a limit of CH/100.

- CH is measured from the base to the top of the crane rail.
- L is the centre to centre distance between crane runway beam supports.

5.5 Runway End Stops and Bumpers

It is required to have an end stop at each end of a crane runway to stop the crane from running off the end of the runway beam. For slow, small capacity cranes, the end stop forces can be reasonably assumed to be similar to the longitudinal force in the building code and bumpers may be wood or rubber. For faster, larger capacity cranes, the end impact can be a substantial force to be managed in the bracing load path and the structural design of the crane bridge. To mitigate these dynamic impact forces, energy absorbing hydraulic or spring bumpers can be added to the crane truck or the runway end stop. The maximum limit forces that will be transmitted by the bumper should be included in the crane information provided to the SBS designer.

Bumper length may affect the hook closest approach to the end of the runway and this should be considered in the owner's operating requirements for the crane.

5.6 Crane Data

Crane Data for the design of crane systems is to be provided by the manufacturer of the crane to the designer of the crane supporting system. Listed below is the minimum required crane information to be used in the design of crane supporting systems.

- Quantity of cranes
- New or existing crane
- Capacity (tons or tonnes)
- Class
- Span
- Power source (hand geared or electric)
- Total weight of crane bridge with end trucks, weight of trolley and hoist
- Maximum static wheel load
- Spacing, diameter and number of wheels
- Vertical and horizontal clearances
- Hook approach
- Special impact factors or service requirements
- End bumper impact limit force

5.7 Loads on Frames

The sketch in Figure 5-5 shows the cross section of a steel building system with the associated crane loads. The sketch in Figure 5-6 shows the longitudinal loads applied to the building by the crane.

Figure 5-5: Building Section Showing Loads

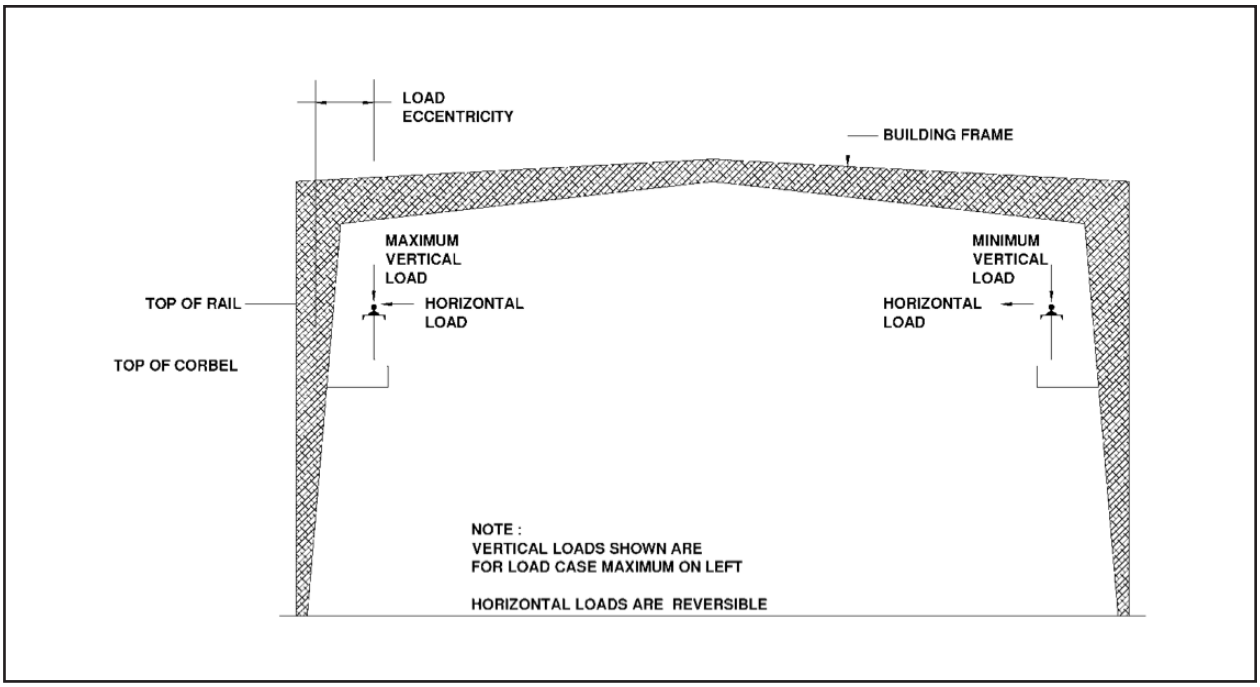

Figure 5-6: Building Longitudinal Loads

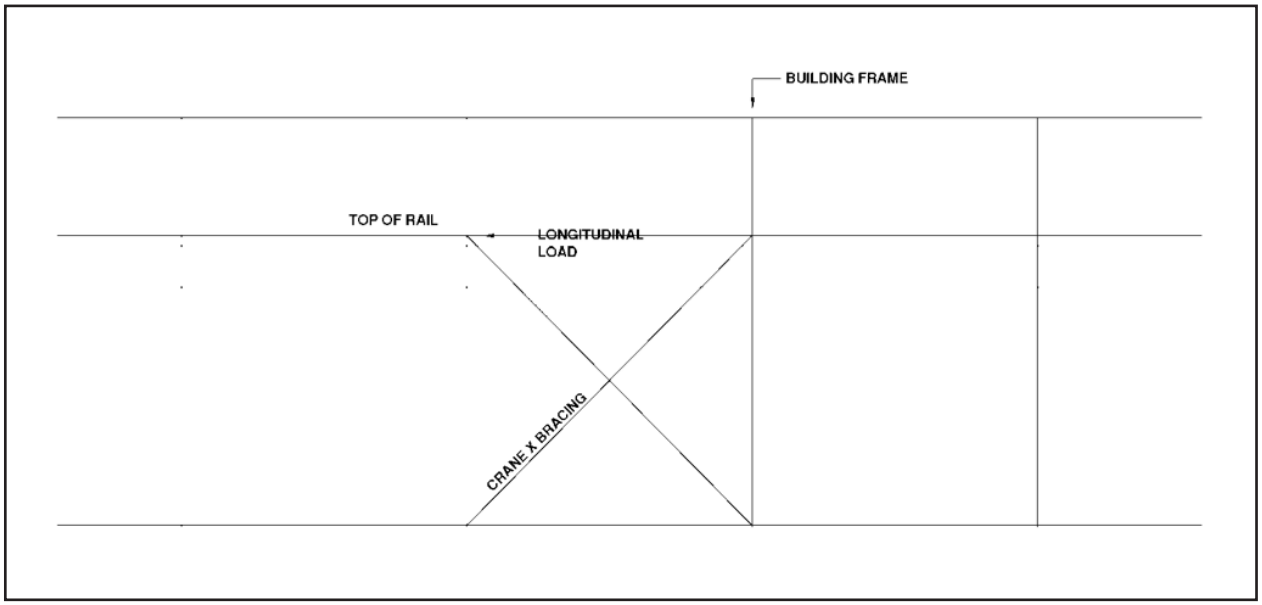

5.8 Load Directions

The vertical crane live loads are applied to the top of the rail at the centerline of the runway beams. The weight of the runway beam is applied at the top of the corbel bracket. The vertical loads are applied eccentric to the supporting frame column when a corbel attached to the column is used. The vertical, horizontal and longitudinal crane loads are considered as live loads. They are applied at the top of the crane rail as illustrated in Figures 5-6 and 5-7.

Figure 5-7: Building Crane Loads

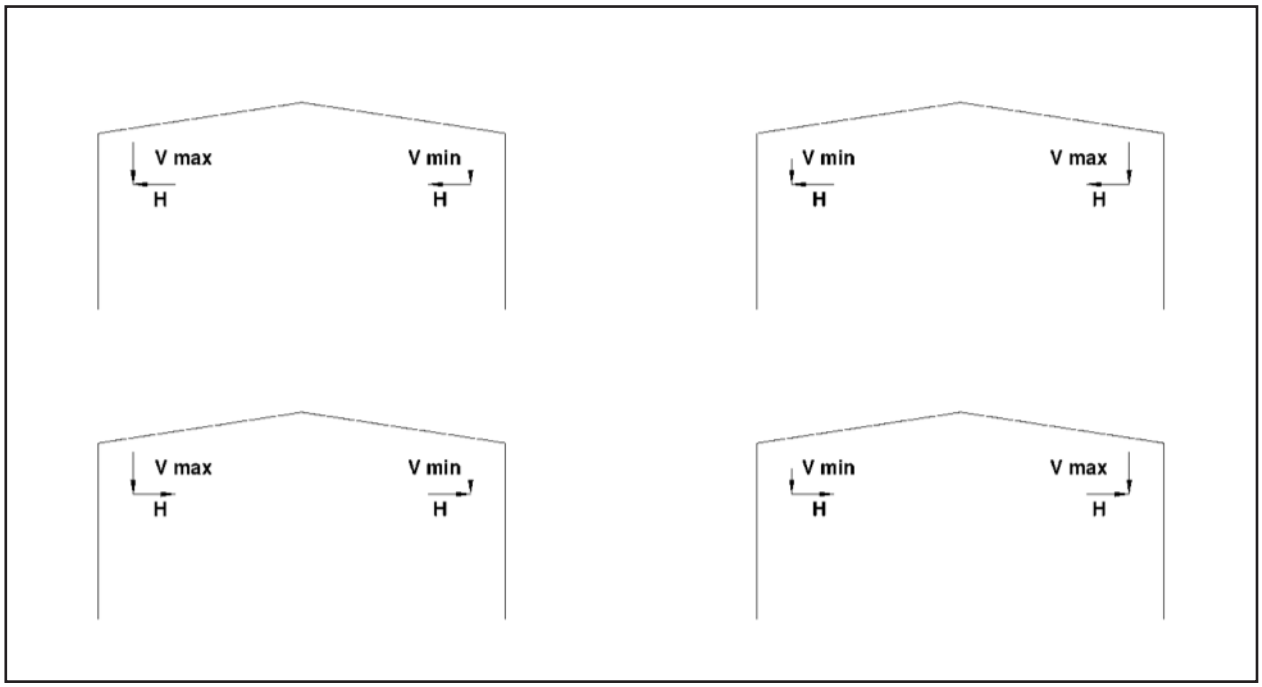

5.9 Runway Beam Loads

The design of the runway beam is to include all the loads imposed on the beam, which include the self weight of the beam, rail, all accessories, the loads induced from the crane and the lifted load. The Impact Factor is applied to the lifted load and the weight of the crane, including the trolley and hoist, and is related to the power and operating means. For example, a cab or radio-operated crane has an impact factor of 1.25; whereas pendant operated or hand operated hoists have an impact factor of 1.10. Various limit conditions are described in the CISC Guide and the NBCC.

Crane beams are usually designed as simple span beams. Structural analysis of the beam is required to determine the location of the maximum design moments and shears due to the crane traveling along the length of the crane beam.

5.10 Load Combinations

Consideration of the magnitude and direction of the crane must be taken into account when loading the frame. One combination is to include the maximum vertical loads on one side of the bridge with the horizontal loads going in one direction and then a combination with the horizontals going in the opposite direction. Frames should always be designed with the maximum load on one side and the minimum load on the other.

Multiple cranes can impact the quantity of load combinations greatly, especially for multi-span frames. For vertical loads, all combinations of maximum/minimum loads for each crane must be checked; all cranes are loaded simultaneously. This is not necessary for lateral and longitudinal loads, since there is a very low probability of multiple cranes imposing full lateral (or longitudinal) loads at the same time. Similarly, the vertical impact load is not required for all cranes simultaneously. Refer to the *MBMA Metal Building Systems Manual* for multi-crane load combinations.

5.11 Runway Beam Supports

Runway beam supports vary depending on the type of crane, lift capacity and nature of the support structure. Under hung bridge and monorail runway beams are typically hung from an over head structure with a hanger or a structural stub. Top-running bridge runway beams may be seated on a cantilevered corbel on the building column for light capacity, a step, integrated in the building column, or a separate post for high capacity or high service level cranes.

The design of the crane runway beam supporting corbel is to include the impact factor and fatigue loading. The design of the crane beam corbel should include all the loads imposed on the corbel from the crane beam. Simple span crane beams impose loads in one direction. Continuous crane beam design causes stress reversals on the corbel.

5.12 Crane Load Design Criteria Example

Building Size:

30 m clear span building x 42 m long x 9 m high
7 - 6 m bays

Crane Data:

1 new 10 tonne, Class C, electric operated crane
Crane span: to be determined
Crane weight: 11500 Kg (113 kN)
Trolley weight: 630 Kg (6.2 kN)
Hoist weight: combined with trolley
Maximum wheel load: 81.3 kN (conservatively assumes hook closest approach = 0)
Number of wheels: 2 per end truck
Wheel spacing: 4980 mm
Vertical clearance: 1295 mm
Horizontal clearance: 203 mm
Hook closest approach: 1016 mm (Left/Right)
Crane is electrically operated, and is not pendant operated
Code specified service requirements

Determine the Crane Span:
The crane span is the building width, less the structure depth, less the horizontal clearances, and is illustrated in Figure B8.

Building Width = BWD = 30000 mm
Assumed Frame Width = AFWD = 1070 mm
Horizontal Clearance = HCD = 203 mm
Crane span = SPD = BWD – 2 (AFWD + HCD)
SPD = 30000 – 2(1072 + 203) = 27450 mm

Figure 5-8: Crane Span

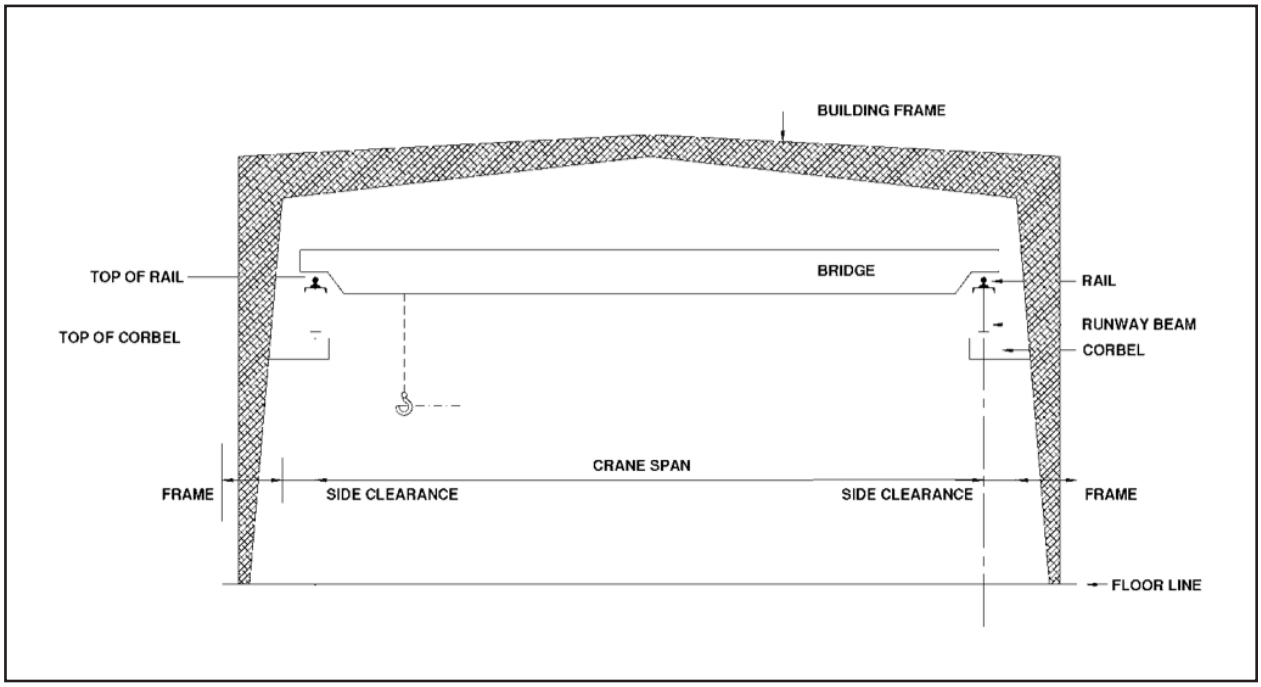

Calculate the Crane Loads:
Lifted Crane Load = LCL = 10 tonnes = 97.9 kN
Crane Weight = CW = 113 kN
Trolley and Hoist Weight = THW = 6.2 kN

When the lifted load is hoisted and is as far to the left as physically possible, it is at the closest position to the left support. This is the hook closest approach and may be different for left and right. Conservatively use the lesser value of left or right, or use zero.

Hook Approach = HAD = 1016 mm
The Maximum Load Factor for this span based on the side approach is
MXLF = (SPD –HAD) /SPD = (27450 – 1016)/ 27450 = 0.96

The Minimum Load Factor for this span based on the side approach is
MNLF = 1 – MXLF = 1 – 0.96 = 0.04

There are 2 wheels per truck and 2 trucks per crane for a total of 4 wheels for this crane.
Wheels per Truck = TrW = 2
Total number of Wheels = TTrW = 4

The calculated Wheel Loads are:
Maximum Static Wheel Load = MXWL = CW/TTrW + MXLF (THW + LCL) / TrW
MXWL = 113 / 4 + 0.96 (6.2 + 97.9) / 2 = 78.2 kN

Minimum Wheel Load = MNWL=CW/ TTrW + MNLF (THW + LCL) / TrW
MNWL = 113 / 4 + 0.04 (6.2 + 97.9) / 2 = 30.3 kN

The sum of all wheel loads is 2 (78.2) + 2 (30.3) = 217 kN
Check the sum of the lifted load + the crane, trolley and hoist weight.
113 + 6.2 + 97.9 = 217 kN

The maximum load of the crane on any one frame will be when a crane wheel is directly in line with the frame centerline as illustrated in Figure 5-9 for a 2 wheel end truck.

Figure 5-9: Configuration Causing Maximum Crane Load on a Frame (2 wheel end truck shown)

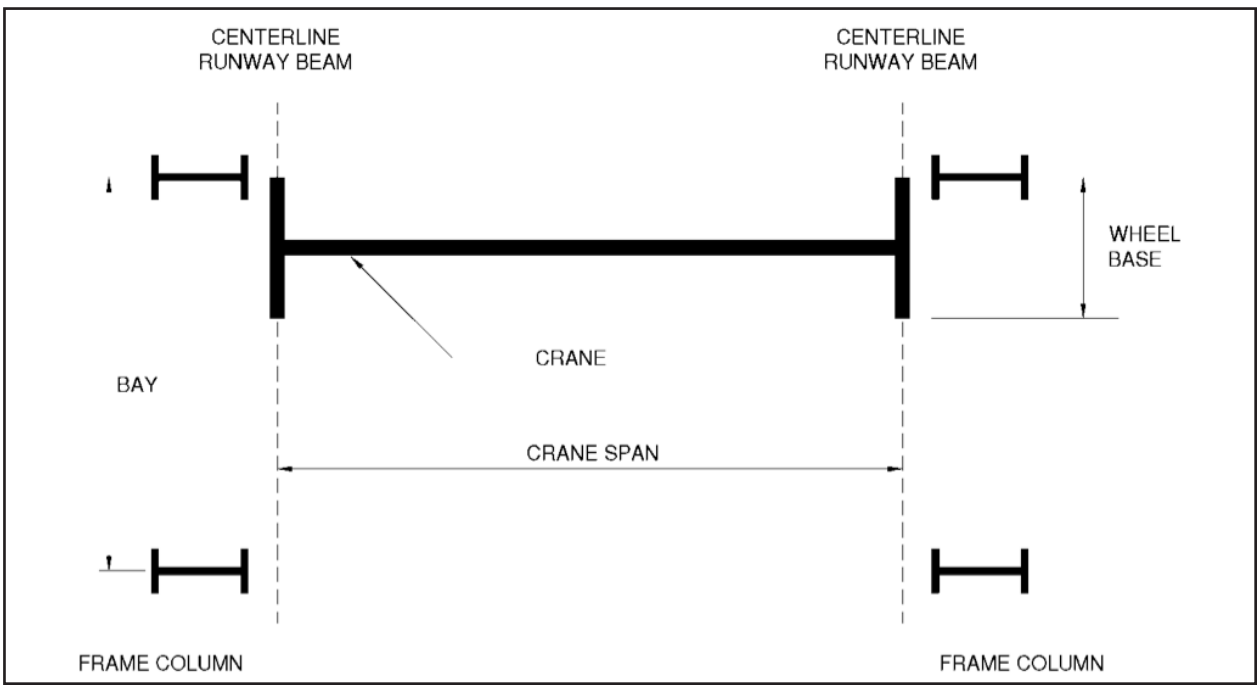

The distance between frames is the bay size, BAYD = 6000 mm
The Wheel Spacing = WSD = 4980 mm
Truck Wheel Factor = TWF = (2 – WSD/ BAYD)
= 2 – 4980/6000 = 1.17

Vertical Frame Load
Assume the runway beam, rail and accessories RDL = 7 kN per 6 m bay
Maximum Live Load:
MXVFL = MXWL * TWF + RDL = 78.2 * 1.17 + 7 = 98.5 kN
Minimum Live Load:
MNVFL = MNWL * TWF + RDL = 30.3 * 1.17 + 7 = 42.5 kN

Horizontal Load (Lateral):
The horizontal load is 20% of the sum of the lifted load, weight of the trolley and hoist weight applied at the top of the rail and is equally divided between each side of the crane.

If the support structure response is significantly asymmetric it may be reasonable to distribute the loads according to relative stiffness of each side of the support. For a symmetric frame an equal distribution to each side is appropriate.
CLHL = CRHL = (20% (THW + LCL) /2) TWF
= (20% (6.2 + 97.9) /2) 1.17 = 12.2 kN
Note: CISC Guide has alternate loads that may exceed these example values.

Longitudinal Load:
The longitudinal load is to be 10% of the maximum wheel load at the top of the rail.
CLLL = CRLL = 10% (MXWL) * Number of Wheels
= 10% (78.2) * 2 = 15.6 kN

Horizontal loads are transferred along the length of the runway to a brace condition. For light capacity cranes, the longitudinal loads may be resisted by the building bracing. High capacity or high service level cranes will normally have independent bracing system.

The *CANADIAN SHEET STEEL BUILDING INSTITUTE*, the national association of the structural sheet steel industry, promotes the use of sheet steel in building construction through engineered design and standards of quality and performance. Activities focus on sheet steel building products, lightweight steel framing and steel building systems for commercial, industrial and institutional applications and similar products and systems for farm applications.

The Institute provides information regarding the standards of design, fabrication and erection, and offers technical assistance in the use of cold formed and pre-engineered steel products. The CSSBI also represents its members in technical matters connected with government, and provides liaison with organizations such as the Canadian Standards Association and the National Research Council.

CSSBI Member Companies are voluntarily committed to maintaining high industry standards in the design, manufacture and installation of cold formed steel building products and systems. Specifying requirements to CSSBI Standards and dealing with CSSBI Member Companies can provide added assurance of quality construction. Only CSSBI Member Companies are authorized to display the CSSBI logo on drawings, stationary, company literature and advertising.

CSSBI Steel Building System Manufacturers

AMERICAN BUILDINGS COMPANY
501 Golden Eagle Drive
LaCrosse, VA
23950 USA
Phone: (434) 757-2220
Fax: (434) 757-1892
www.americanbuildings.com

BEHLEN INDUSTRIES LP
927 Douglas Street
Brandon, MB
R7A 7B3
Phone: (888) 315-1035
Fax: (204) 725-4932
www.behlen.ca

BUTLER BUILDINGS (CANADA)
3070 Mainway Drive
Unit 21
Burlington, ON
L7M 3X1
Phone: (905) 332-7786
Fax: (905) 332-6260
www.butlermfg.com

CBC STEEL BUILDINGS, LLC
1700 E. Louise Avenue
Lathrop, CA USA
95330
Phone: (209) 983-0910
Fax: (209) 858-2354
www.cbcsteelbuildings.com

NUCOR BUILDING SYSTEMS
305 Industrial Parkway
Waterloo, IN
46793 USA
Phone: (260) 837-7891
Fax: (260) 837-7384
www.nucorbuildingsystems.com

ROBERTSON BUILDING SYSTEMS
1343 Sandhill Drive
Ancaster, ON
L9G 4V5
Phone: (905) 304-1111
Fax: (905) 304-2420
www.robertsonbuildings.com

STEELWAY BUILDING SYSTEMS
7825 Springwater Road
Aylmer, ON
N5H 2R4
Phone: (519) 765-2244
Fax: (519) 773-7398
www.steelway.com

VARCO PRUDEN BUILDING SYSTEMS
37 Wainwright Avenue
Richmond Hill, ON
L4C 5R4
Phone: (905) 884-9117
Fax: (905) 884-9441
www.vp.com

Notes